ACCUD

ACCURATE MEASUREMENT















2026-2027
EN III

About ACCUD:

ACCUD is a dedicated supplier of measuring instruments.

ACCUD products line not only covers traditional gauges such as calipers, micrometers, dial indicators, height gauges, gauge blocks, but also covers high-technology measuring instruments like hardness tester, vision measuring machine.

ACCUD products are mainly manufactured in Asia, and further inspected according to strict quality criteria.

Our key aims are:

Quality: conforms to international standards with full guarantee.
Service: ensure user have trouble-free use of ACCUD products.
Professional: supply the user the best measuring solution.
Value: supply the product with high cost performance.
Brand: establish good brand impression.


INGEER CERTIFICATION ASSESSMENT SERVICES

ICAS 英格尔认证

QUALITY MANAGEMENT SYSTEM CERTIFICATE

Certification No: 117 24 QU 0297 06 R2S

This is to certify that: Suzhou Accud. Co., Ltd.

Unified social credit code: 91320505094627482

Location: 2F, Plant 2, No. 223 Songshan Road, Suzhou High-Tech Zone, Jiangsu, China

The established MS conforms to: GB/T19001-2016/ISO9001:2015

Scope of approval: Production, Sales of Precision Measuring Tool

Signed by:

Shanghai Ingeer Certification Assessment Co.,Ltd.

IAF


BACL Bay Area Compliance Labs Corp.

DECLARATION OF CONFORMITY

Attestation Number : AOCRSZ180118812-02
Date of Issue: 2018-03-01
Product: IP65 DIGITAL OUTSIDE MICROMETER
Model(s): 313-001-02, 313-002-02, 313-003-02, 313-004-02, 313-005-02, 313-006-02
Brand: Suzhou
Applicant Name & Address: SUZHOU ACCUD CO., LTD 223 Songshan Road, Suzhou New District, 215129 China
Manufacturer & Address: SUZHOU ACCUD CO., LTD 223 Songshan Road, Suzhou New District, 215129 China

Bay Area Compliance Laboratories Corp. (Shenzhen) hereby declares that the submitted sample(s) of the above equipment has been tested for CE-marking and in accordance with the following European Directives and Standards:

EMC Directive 2014/30/EU

Harmonized Standards	Test Report Number
EN 61326-1:2013 EN 61326-2-2:2013	RSZ180118812-01
* Note: Harmonized Standards not yet cited in OJ	

CE Mark is permitted only after all applicable requirements are met in accordance with the European Union Rules, including the manufacturer's issuance of a "Declaration of Conformity. The Declaration of Conformity is issued under sole responsibility of manufacturer. This attestation is specific to the standard(s) stated above and compliance with additional standards and/or European directives are applicable.

Attestation by: Alvin Huang
Lab Manager

Signature

BACL

INDEX

Search products:

1. According to the product code, search in the code index (in the end of this catalogue)
2. According to the product functions, search following index.

VIDEO

Please scan QR code to watch the basic operation video of the products.

P1-3

OUTPUT INTERFACE
WIRELESS DATA TRANSFER SYSTEM

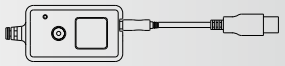

P4-60

DIGITAL CALIPER
VERNIER CALIPER
DIAL CALIPER

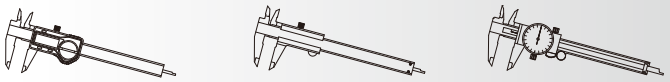

P61-78

DEPTH CALIPER
DEPTH MICROMETER
DEPTH INDICATOR

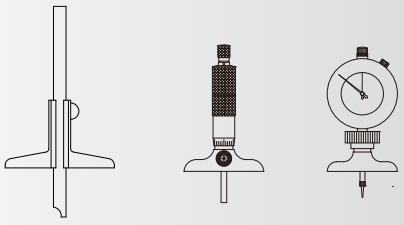

P79-90

HEIGHT GAGE

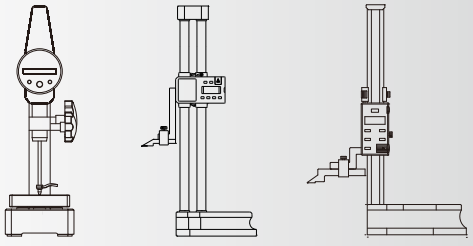

P91-146

OUTSIDE MICROMETER
MICROMETER HEAD
MICROMETER STAND

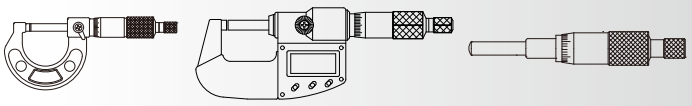

INDEX

P147-176

INSIDE MICROMETER
BORE GAUGE
RADIUS GAUGE
CIRCUMFERENCE TAPE

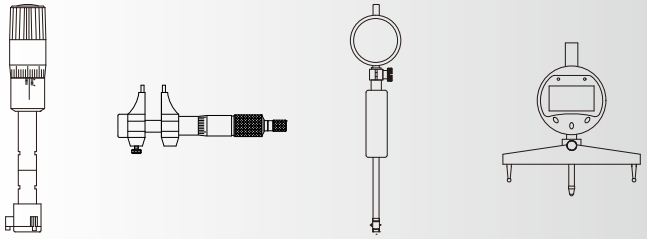

P177-231

LINEAR GAUGE
DIAL INDICATOR
DIGITAL INDICATOR
DIAL TEST INDICATOR
STYLI
MAGNETIC STAND
INDICATOR STAND
CONCENTRICITY GAUGE

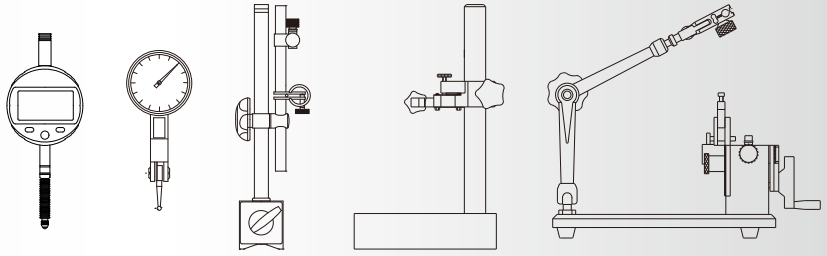

P232-259

DIAL CALIPER GAUGE
DIGITAL CALIPER GAUGE
THICKNESS GAUGE
SNAP GAUGE
CRANKSHAFT TESTER

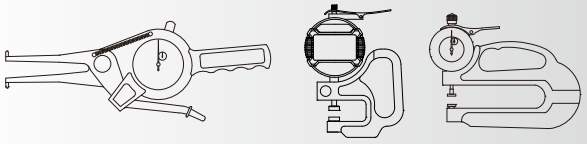

P260-301

GAUGE BLOCK
PIN GAUGE
STEEL BALL
MASTER SETTING DISC
RING GAUGE
PLUG GAUGE



P301-330

PROTRACTOR
SQUARE
STRAIGHT EDGE
LEVEL

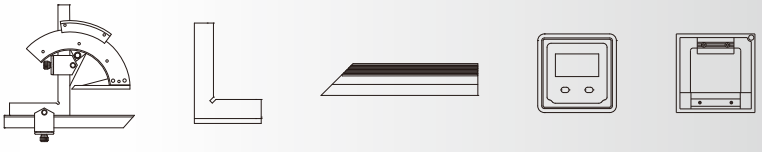

INDEX

P331-337

CHAMFER GAUGE
DIGITAL KEYWAY GAUGE
DIGITAL STEP GAUGE

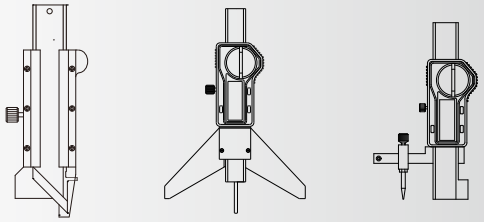

P338-379

FEELER
PITCH GAUGE
ANGLE GAUGE
RADIUS GAUGE
TELESCOPING GAUGE
TAPER GAUGE
WELDING GAUGE
CHAMFER GAUGE
KEY GAUGE
INSIDE/OUTSIDE CALIPER
DIVIDER
STEEL RULE
MEASURING TAPE
MARKING GAUGE
DIGITAL SCALE
STEP GAUGE

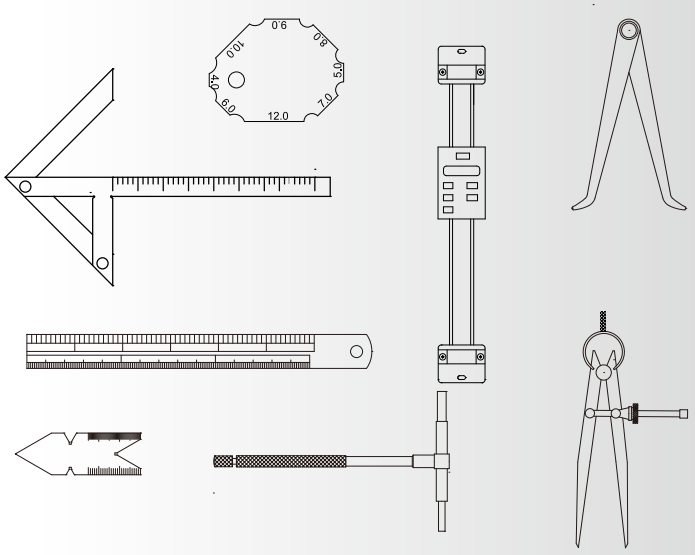

P380-411

GRANITE SURFACE PLATE
V-BLOCK
PARALLEL SET
ANGLE PLATE SET
PRECISION VISE
CENTERING INDICATOR
EDGE FINDER
ZERO SET

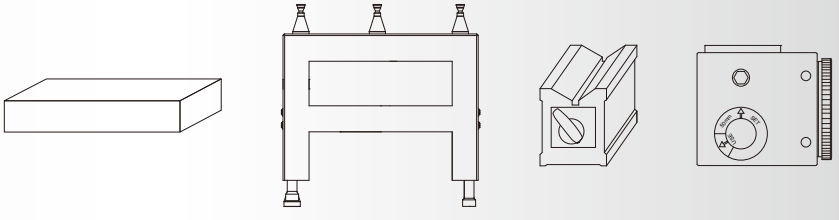

P411-417

MEASURING TOOLS SET

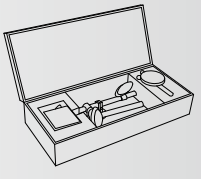

INDEX

P418-461

ENDOSCOPE
MAGNIFIER
MICROSCOPE
PROFILE PROJECTOR
VISION MACHINE
TOOL PRESETTER
3D SCANNER

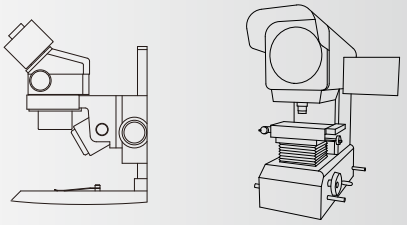

P462-492

HARDNESS TESTER

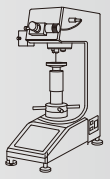

P493-509

ROUGHNESS SPECIMEN
PROFILE/ROUGHNESS TESTER
ROUNDNESS TESTER
COORDINATE MEASURING MACHINES

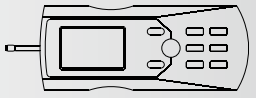

P510-545

ULTRASONIC THICKNESS GAUGE
COATING THICKNESS GAUGE
TEMPERATURE METER
INFRARED THERMOMETER
DIGITAL MULTIMETER
TACHOMETER
LASER DISTANCE METER
LASER LEVEL
REFRACTOMETER
GLOSS METER
COLOR METER

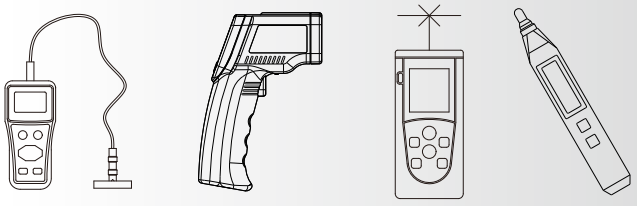

P546-568

FORCE GAUGE
TORQUE WRENCH
TORQUE SCREWDRIVER
TORQUE METER
WEIGHING SCALE
WEIGHT

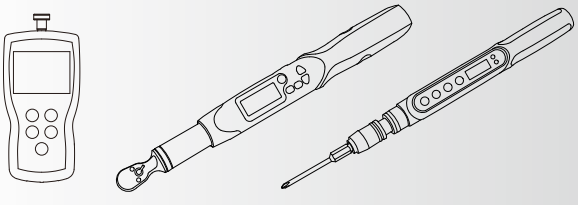

P569

GRINDING POLISHING MACHINE
CUTTING MACHINE



SERIES 800 WIRELESS DATA TRANSFER SYSTEM (ZIGBEE)

CR2032

VIDEO

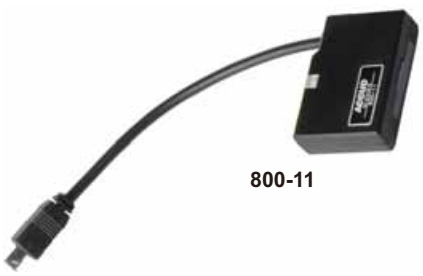

800-11



800-02

- Max. transmission distance: 15m
- For single channel receiver (code: 800-01), it can be only connected to one receiver(gages). There is no software, the data can be transferred into Excel, Word directly.
- For multi- channel receiver(code: 800-02) , it can be connected to Max. 10 receivers(gages). It includes a software, the data can be transferred into the software.
- Wireless zigbee protocol, conforming to IEEE802, 2.4GHz band

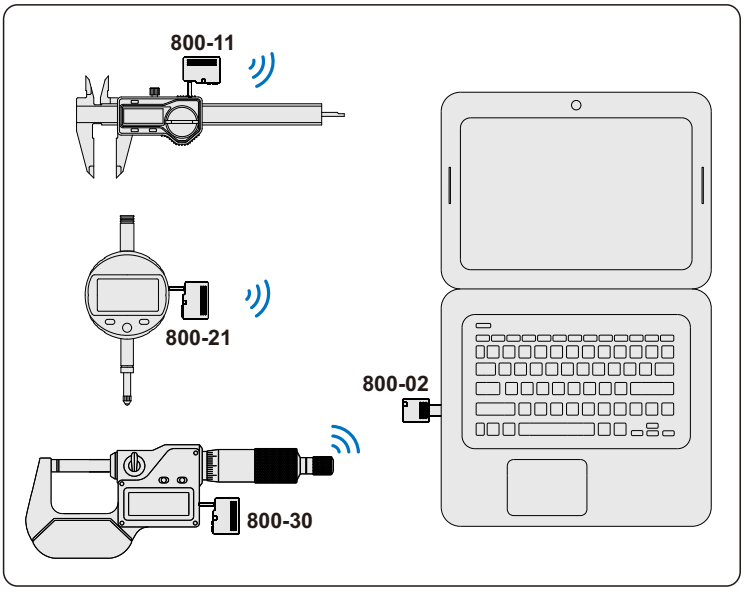

Code	Name	Plug to product	Products
800-01	single channel receiver		for follow measuring tools
800-02	multi- channel receiver		for follow measuring tools
800-10	transmitter		for digital calipers and height gage with following electronics  * *
800-11	transmitter		for digital calipers with following electronics 

Code	Name	Plug to product	Products
800-15	transmitter		for digital calipers and height gage with following electronics 
800-21	transmitter		for digital indicators with following electronics 
800-20	transmitter		for digital indicators with following electronics 
800-30	transmitter		for digital micrometers with data output with following electronics 

*Confirm the electronics output port type when placing orders

100/200/300/400 USB OUTPUT INTERFACE

- The cable without software, push the black button or footswitch, the data can be transferred into Excel, Word directly.
- The cable with software, the data can be transferred into the software at a set interval time automatically.



100-11

VIDEO

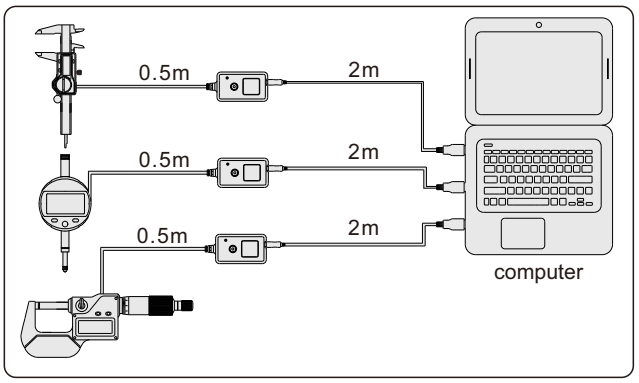

Software

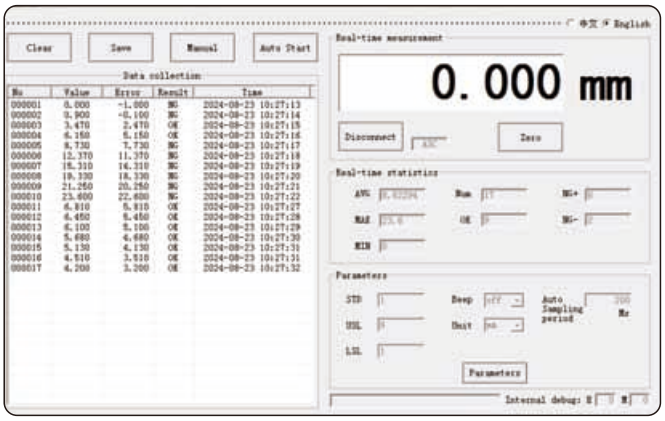

Code	Software	Plug to product	Products
100-03	Without		for digital calipers with following electronics 
100-04	With		
100-03L	Without		for digital height gage with following electronics 
100-04L	With		
100-11	Without		for digital calipers with following electronics 
100-12	With		
100-15	Without		for digital calipers and height gage with following electronics 
100-17	Without		for digital calipers with following electronics 
200-03	Without		for digital indicators with following electronics 
200-04	With		

*Confirm the electronics output port type when placing orders

Code	Software	Plug to product	Products
200-01	Without		for digital indicators with following electronics 
200-02	With		
300-03	Without		for digital micrometers with data output with following electronics 
300-04	With		
300-51	Without		for digital micrometers with data output with following electronics 

Connect foot switch to transfer the data (code: **400-01**)

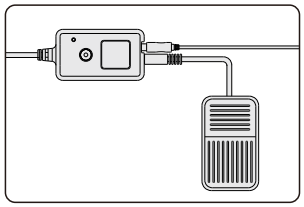

Code	Name
400-01	foot switcht

SERIES 200

CABLE FOR DIGITAL INDICATORS AND MULTI CHANNEL INTERFACE BOX

- Connecting series 208 (software is included)
- Connecting 206 (software is included)



200-92

For following series 208
(counter for linear gauge)



208-004-01



208-008-01

For following 206



206-010-01

code	Plug to product	Products
200-91		for digital indicators with following electronics 
200-92		for digital indicators with following electronics 

Work with series 208 (counter for linear gauge)

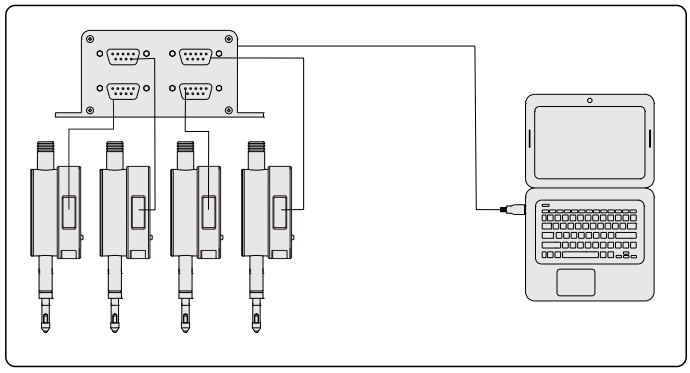

809

MOVABLE WORKBENCH

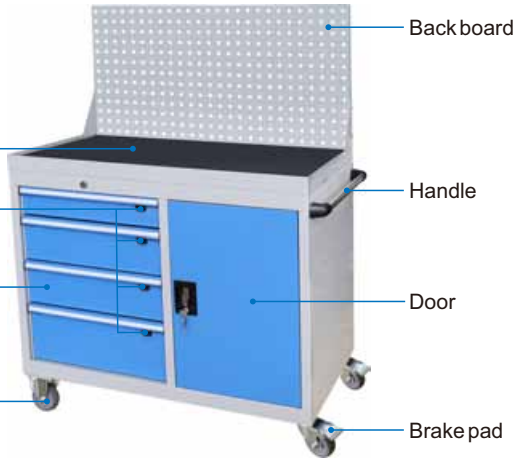

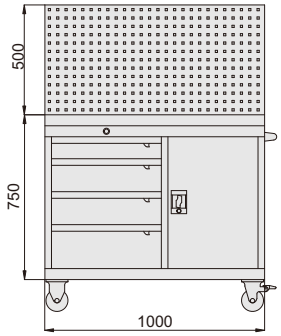

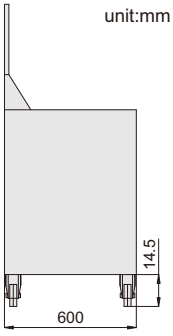

Application



Code	Description	LxWxH(mm)
809-040-11	movable workbench	1000x600x1250

SERIES 111 WIRELESS DIGITAL CALIPER

Certificate | Zigbee | CR2032

ATTENTION:
THE WORKING LIFE OF ONE BATTERY IS ABOUT 3-5 MONTHS

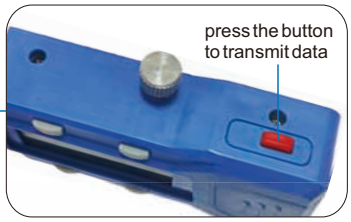

VIDEO



111-006-18

unit: mm

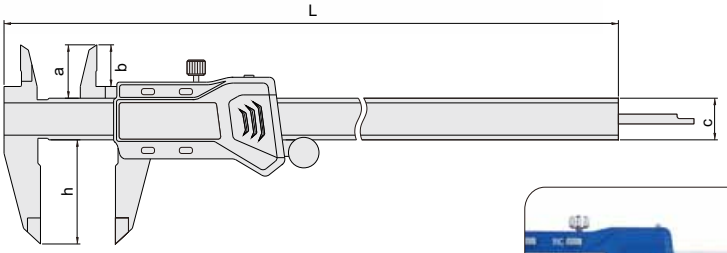

- Non waterproof
- Built-in wireless data transmission module, Zigbee signal
- Transmission distance is 10 meter (under the condition of no obstruction and no electromagnetic interference)
- Resolution: 0.01mm/0.0005"
- Buttons: on/off, zero, mm/in, INC
- Automatic power on/off
- Made of stainless steel
- Optional accessory: receiver (code 800-01 or 800-02)



Application

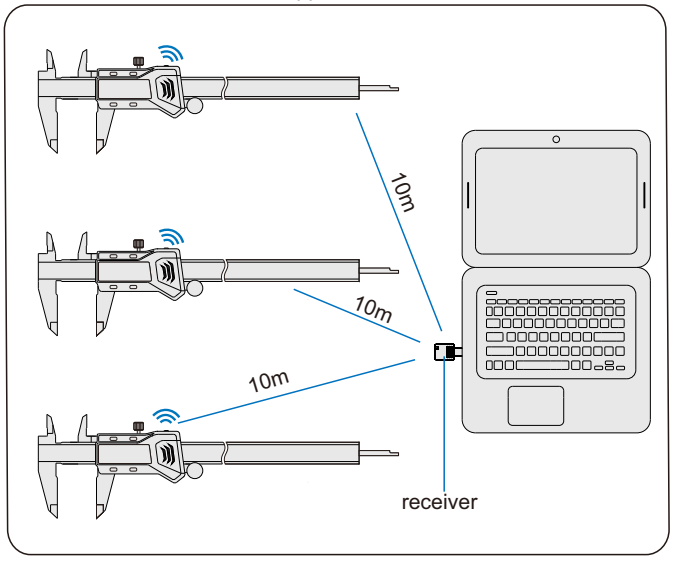

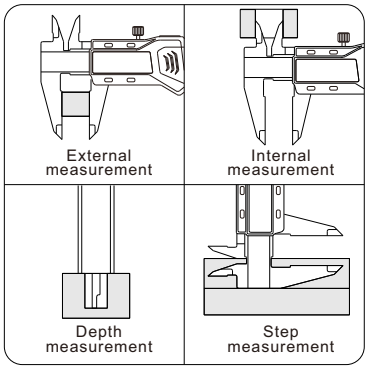

Receiver**(optional)**



Code	Range	Accuracy	a	b	c	h	L
111-006-18	0-150mm/0-6"	±0.02mm	21	16	16	40	236
111-008-18	0-200mm/0-8"	±0.03mm	24	19	16	50	286
111-012-18	0-300mm/0-12"	±0.03mm	25	20.5	16	60	390
111-006-18W	0-150mm/0-6"	±0.02mm	21	16	16	40	236
111-008-18W	0-200mm/0-8"	±0.03mm	24	19	16	50	286
111-012-18W	0-300mm/0-12"	±0.03mm	25	20.5	16	60	390

With manufacturer inspection certificate

SERIES 111 DIGITAL CALIPER

Certificate | Data output | CR2032



111-006-11N

- High accuracy due to using the glass scale
- Resolution: 0.01mm/0.0005"
- Buttons: on/off, zero, mm/in, ABS
- Data output(cable code:100-03 or 100-04)
- Automatic power on/off
- Meet DIN862
- Made of stainless steel

unit: mm

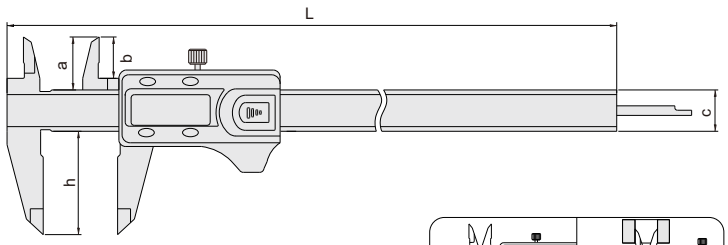

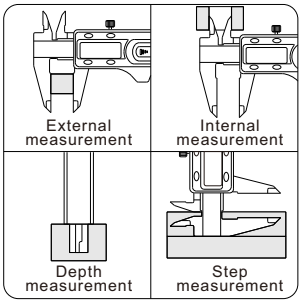

Code	Range	Accuracy	a	b	c	h	L
111-006-11N	0-150mm/0-6"	±0.02mm	21	16	16	40	236
111-008-11N	0-200mm/0-8"	±0.03mm	24	19	16	50	286
111-012-11N	0-300mm/0-12"	±0.03mm	25	20.5	16	60	390

With manufacturer inspection certificate

SERIES 111 DIGITAL CALIPER

Certificate | Data output | CR2032

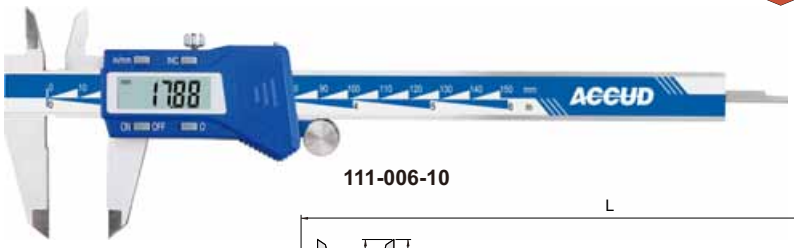

111-006-10

- High accuracy due to using the glass scale
- Resolution: 0.01mm/0.0005"
- Buttons: on/off, zero, mm/in, INC
- Data output(cable code:100-03 or 100-04)
- Automatic power on/off
- Meet DIN862
- Made of stainless steel

unit: mm

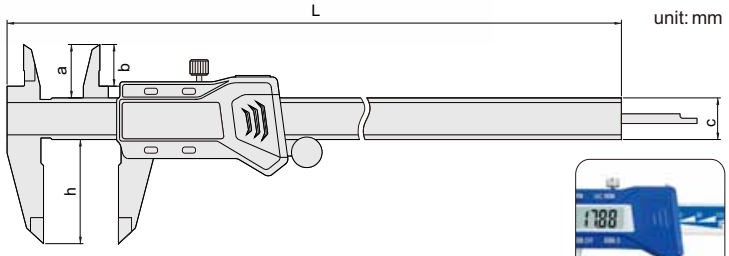

without thumb roller (W)

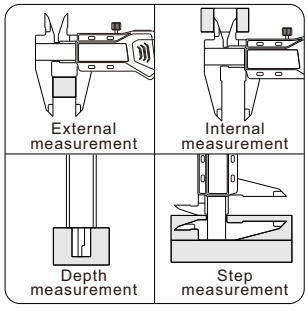

Code	Range	Accuracy	a	b	c	h	L
111-006-10	0-150mm/0-6"	±0.02mm	21	16	16	40	236
111-008-10	0-200mm/0-8"	±0.03mm	24	19	16	50	286
111-012-10	0-300mm/0-12"	±0.03mm	25	20.5	16	60	390
111-006-10W	0-150mm/0-6"	±0.02mm	21	16	16	40	236
111-008-10W	0-200mm/0-8"	±0.03mm	24	19	16	50	286
111-012-10W	0-300mm/0-12"	±0.03mm	25	20.5	16	60	390

With manufacturer inspection certificate

SERIES 111 DIGITAL CALIPER WITH ROUND DEPTH BAR

Certificate | Data output | CR2032

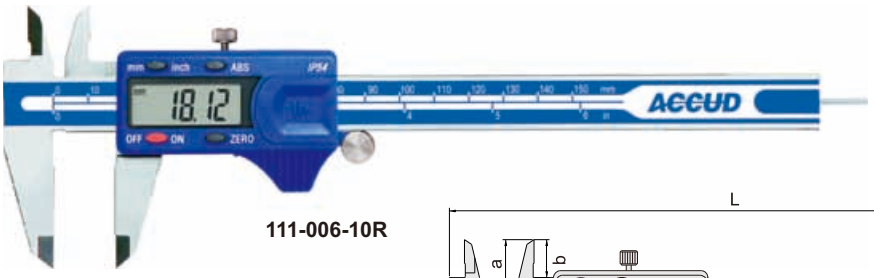

111-006-10R

unit: mm

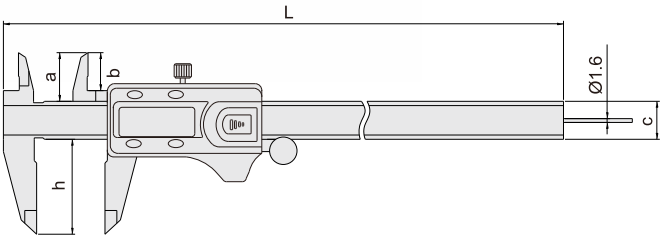

- With round depth bar, for small hole depth measurement
- Resolution: 0.01mm/0.0005"
- Buttons: on/off, zero, mm/in, ABS
- Data output(cable code:100-03 or 100-04)
- Automatic power on/off
- Meet DIN862
- Made of stainless steel



without thumb roller (W)

Round depth bar

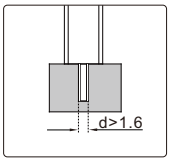

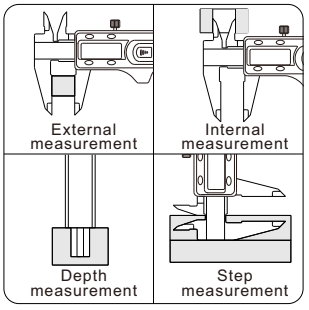

Code	Range	Accuracy	Thumb roller	a	b	c	h	L
111-006-10R	0-150mm/0-6"	±0.03mm	with	21	16	16	40	236
111-006-10RW	0-150mm/0-6"	±0.03mm	without	21	16	16	40	236

With manufacturer inspection certificate

SERIES 111 DIGITAL CALIPER

Certificate | Data output | CR2032

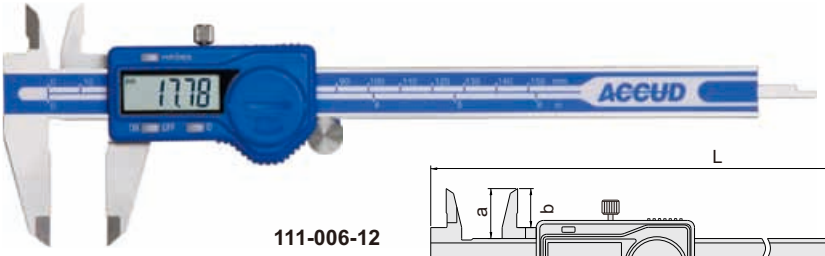

111-006-12

unit: mm

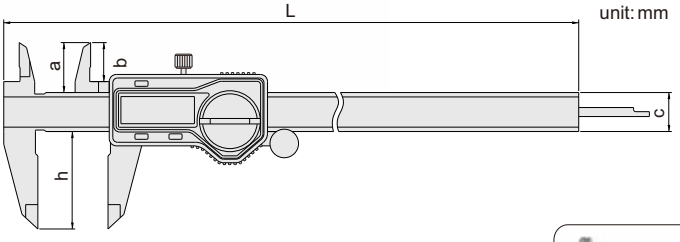

- Resolution: 0.01mm/0.0005"
- Buttons: on/off, zero, mm/inch
- Data output(cable code:100-11 or 100-12)
- Automatic power on/off
- Meet DIN862
- Made of stainless steel



without thumb roller (W)

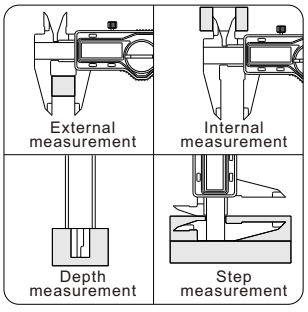

Code	Range	Accuracy	a	b	c	h	L
111-006-12	0-150mm/0-6"	±0.03mm	21	16	16	40	236
111-008-12	0-200mm/0-8"	±0.03mm	24	19	16	50	286
111-012-12	0-300mm/0-12"	±0.03mm	25	20.5	16	60	390
111-006-12W	0-150mm/0-6"	±0.03mm	21	16	16	40	236
111-008-12W	0-200mm/0-8"	±0.03mm	24	19	16	50	286
111-012-12W	0-300mm/0-12"	±0.03mm	25	20.5	16	60	390

With manufacturer inspection certificate

SERIES 111 DIGITAL CALIPER WITH METAL COVER

Certificate
CR2032



111-006-16

unit: mm

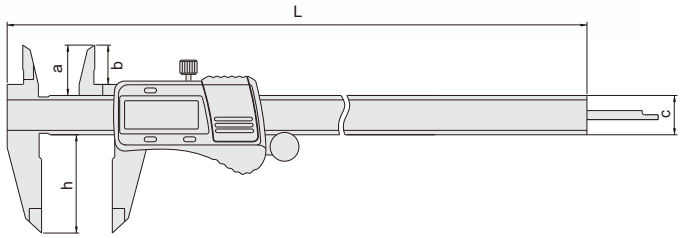

- Resolution: 0.01mm/0.0005"
- Buttons: on/off, zero, mm/inch
- Made of stainless steel

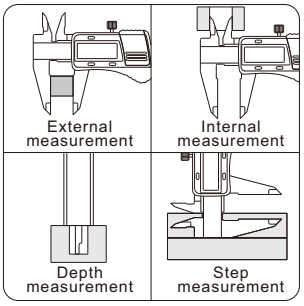

Code	Range	Accuracy	a	b	c	h	L
111-006-16	0-150mm/0-6"	±0.03mm	21	16	16	40	236
111-008-16	0-200mm/0-8"	±0.03mm	24	19	16	50	286
111-012-16	0-300mm/0-12"	±0.03mm	25	20.5	16	60	390

With manufacturer inspection certificate

SERIES 111 DIGITAL CALIPER WITH METAL COVER

Certificate
LR44

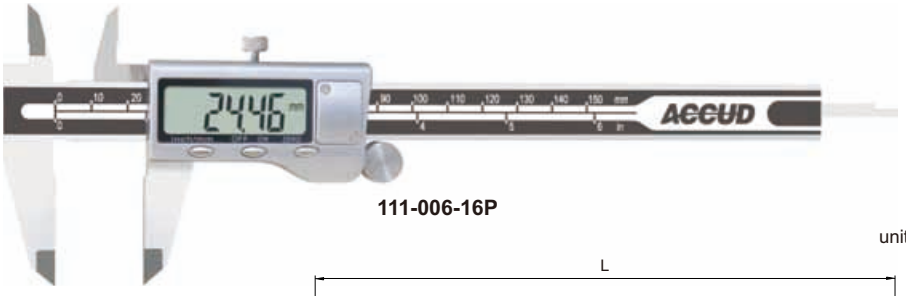

111-006-16P

unit: mm

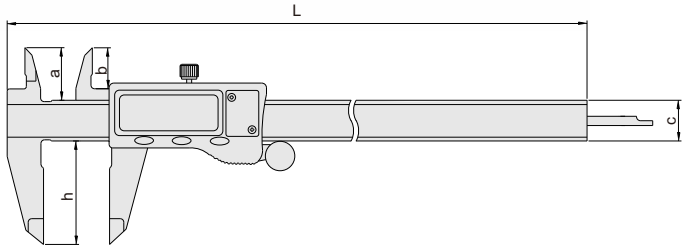

- Resolution: 0.01mm/0.0005"
- Buttons: on/off, zero, mm/inch
- Made of stainless steel

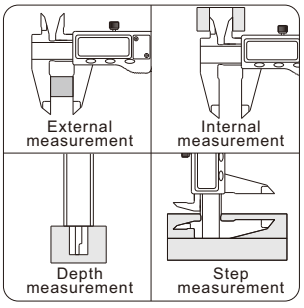

Code	Range	Accuracy	a	b	c	h	L
111-006-16P	0-150mm/0-6"	±0.03mm	21	16	16	40	236
111-008-16P	0-200mm/0-8"	±0.03mm	24	19	16	50	286
111-012-16P	0-300mm/0-12"	±0.03mm	25	20.5	16	60	390

With manufacturer inspection certificate

SERIES 111 DIGITAL CALIPER

Certificate | Data output | CR2032 | ABS



111-006-17

- High accuracy
- Absolute system
- Resolution: 0.01mm/0.0005"
- Buttons: on/off, ABS/ZERO, inch/mm, ORIGIN
- Data output(cable code:100-17)
- Meet DIN862
- Made of stainless steel

unit: mm

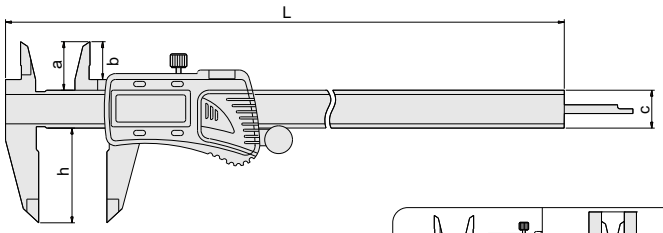

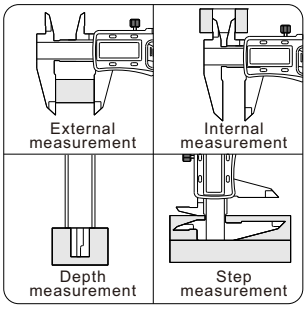

Code	Range	Accuracy	a	b	c	h	L
111-006-17	0-150mm/0-6"	±0.02mm	21	16.5	16	40	236
111-008-17	0-200mm/0-8"	±0.02mm	24	19	16	50	286
111-012-17	0-300mm/0-12"	±0.03mm	26	20.5	16	60	390

With manufacturer inspection certificate

SERIES 112 IP67 WATERPROOF DIGITAL CALIPER

Certificate | CR2032 | IP67 | ABS



112-006-11H

- IP67 protection level
- Absolute measuring system
- Resolution: 0.01mm/0.0005"
- Automatic power off
- Buttons: zero, mm/inch, data preset
- Made of stainless steel

unit: mm

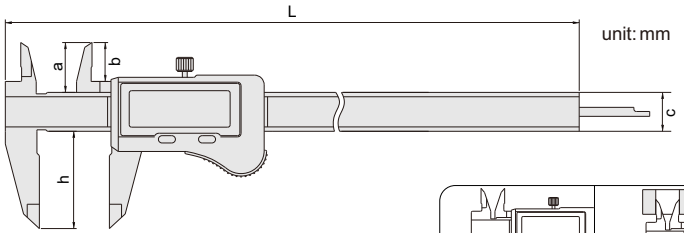

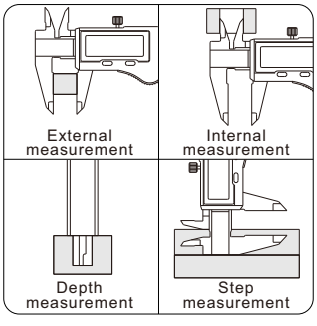

Code	Range	Accuracy	a	b	c	h	L
112-006-11H	0-150mm/0-6"	±0.02mm	21	16.5	16	40	236
112-008-11H	0-200mm/0-8"	±0.02mm	24	19	16	50	286
112-012-11H	0-300mm/0-12"	±0.03mm	25	20.5	16	60	390

With manufacturer inspection certificate

SERIES 112

IP67 WATERPROOF DIGITAL CALIPER WITH ROUND DEPTH BAR



112-006-11HR

- IP67 protection level
- Absolute measuring system
- Resolution: 0.01mm/0.0005"
- Automatic power off
- Buttons: zero, mm/inch, data preset
- Made of stainless steel

unit: mm

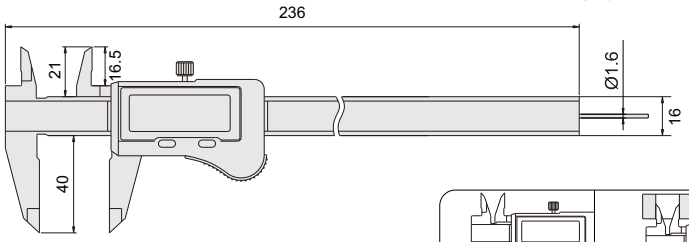

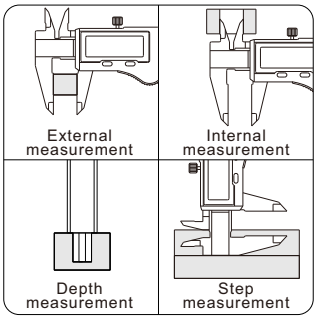

Code	Range	Accuracy
112-006-11HR	0-150mm/0-6"	±0.02mm

With manufacturer inspection certificate

SERIES 112

IP67 WATERPROOF DIGITAL CALIPER

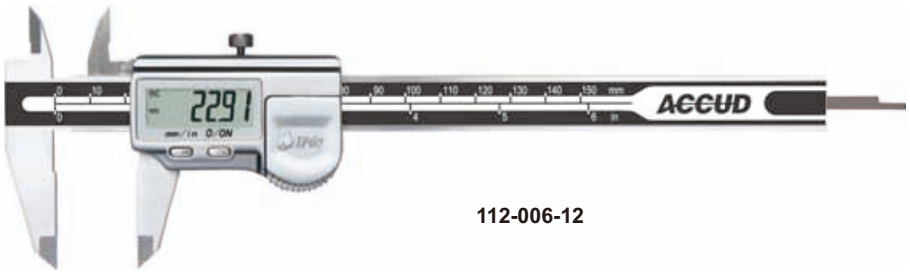

112-006-12

- IP67 protection level
- Absolute measuring system
- Resolution: 0.01mm/0.0005"
- Automatic power off
- Buttons: on/off, zero, mm/inch

unit: mm

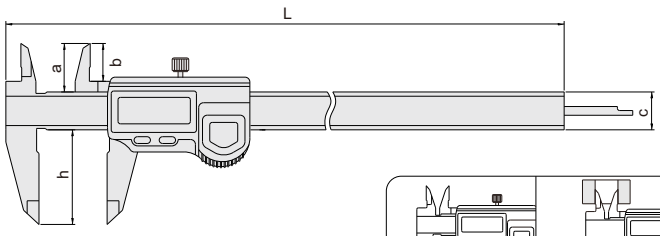

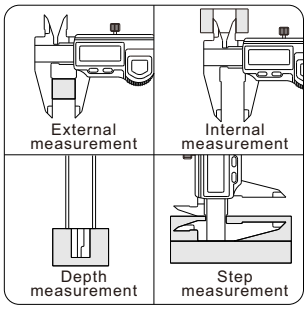

Code	Range	Accuracy	a	b	c	h	L
112-006-12	0-150mm/0-6"	±0.03mm	21	16.5	16	40	236
112-008-12	0-200mm/0-8"	±0.03mm	24	20	16	50	286
112-012-12	0-300mm/0-12"	±0.03mm	25	20.5	16	60	390

With manufacturer inspection certificate

SERIES 112 IP67 WATERPROOF DIGITAL CALIPER

Certificate | CR2032 | IP67



112-006-15

- IP67 protection level
- Resolution: 0.01mm/0.0005"
- Automatic power off
- Buttons: on/off, zero, mm/inch, HOLD

unit: mm

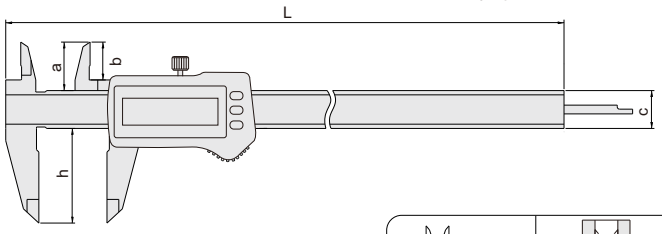

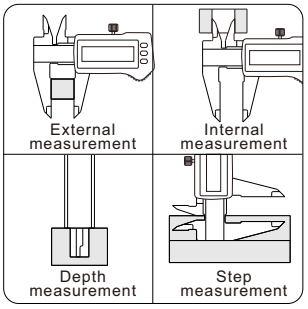

Code	Range	Accuracy	a	b	c	h	L
112-006-15	0-150mm/0-6"	±0.03mm	21	16.5	16	40	236
112-008-15	0-200mm/0-8"	±0.03mm	24	20	16	50	286
112-012-15	0-300mm/0-12"	±0.03mm	25	20.5	16	60	390

With manufacturer inspection certificate

SERIES 106 DIGITAL CALIPER WITH LARGE SCREEN

IP54 | Certificate | Charge



106-006-11

- Resolution: 0.01mm/0.0005"
- Buttons: on/off, zero, mm/inch
- Data output(cable code:100-03)
- Made of stainless steel
- Power: rechargeable battery, for 3 months continuous working(full charge)

unit: mm

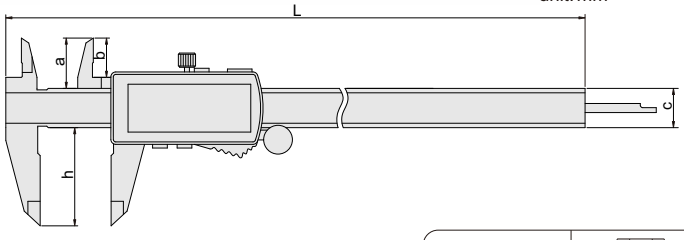

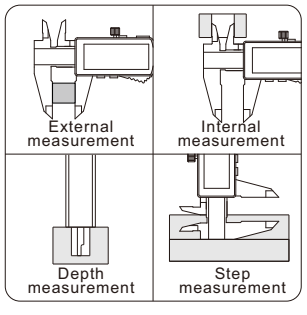

Code	Range	Accuracy	a	b	c	h	L
106-006-11	0-150mm/0-6"	±0.03mm	21	16	16	40	236
106-008-11	0-200mm/0-8"	±0.03mm	24	19	16	50	286
106-012-11	0-300mm/0-12"	±0.03mm	25	20.5	16	60	390

With manufacturer inspection certificate

SERIES 106 DIGITAL CALIPER WITH LARGE SCREEN



106-006-21

unit: mm

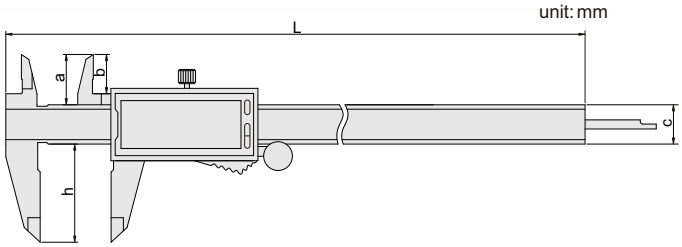

- Resolution: 0.01mm/0.0005"
- Buttons: on/off, zero, mm/inch
- Automatic power on/off
- Meet DIN862
- Made of stainless steel

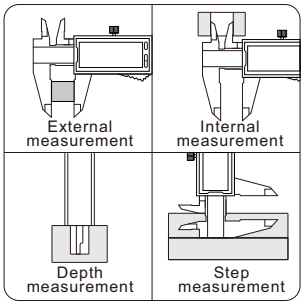

Code	Range	Accuracy	a	b	c	h	L
106-006-21	0-150mm/0-6"	±0.03mm	21	16	16	40	236
106-008-21	0-200mm/0-8"	±0.03mm	24	19	16	50	286
106-012-21	0-300mm/0-12"	±0.03mm	25	20.5	16	60	390

With manufacturer inspection certificate

SERIES 106 DIGITAL CALIPER WITH LARGE SCREEN

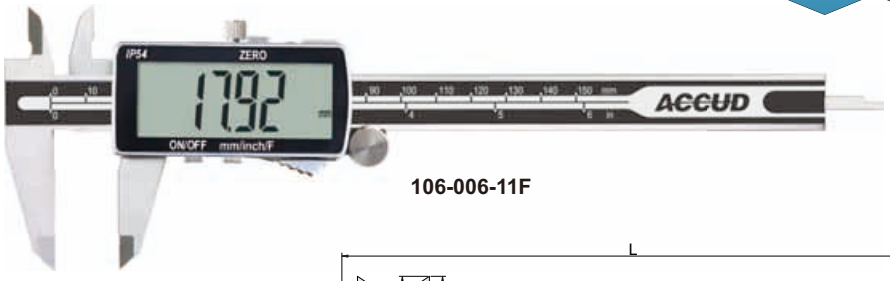

106-006-11F

unit: mm

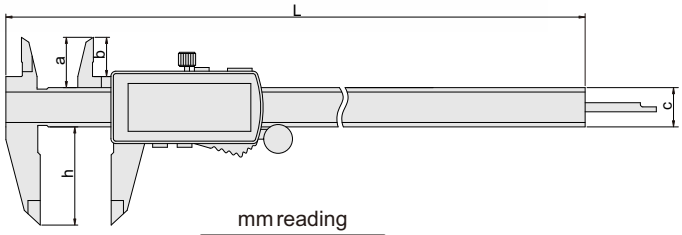

- With fraction reading
- Resolution: 0.01mm, 0.0005", 1/128"
- Buttons: on/off, zero, mm/inch/F
- Data output(cable code:100-03)
- Made of stainless steel
- Power: rechargeable battery, for 3 months continuous working(full charge)

mm reading



inch reading



inch fraction reading



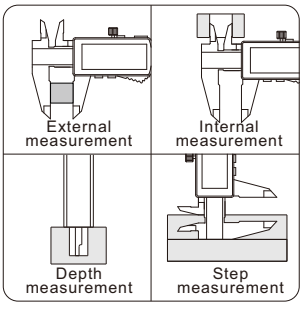

Code	Range	Accuracy	a	b	c	h	L
106-006-11F	0-150mm/0-6"	±0.03mm	21	16	16	40	236
106-008-11F	0-200mm/0-8"	±0.03mm	24	19	16	50	286
106-012-11F	0-300mm/0-12"	±0.03mm	25	20.5	16	60	390

With manufacturer inspection certificate

SERIES 113 FRACTIONAL DIGITAL CALIPER

Certificate CR2032



113-006-11

- With fraction reading
- Resolution: 0.01mm, 0.0005", 1/128"
- Buttons: on/off, zero, mm/inch
- Made of stainless steel

unit: mm

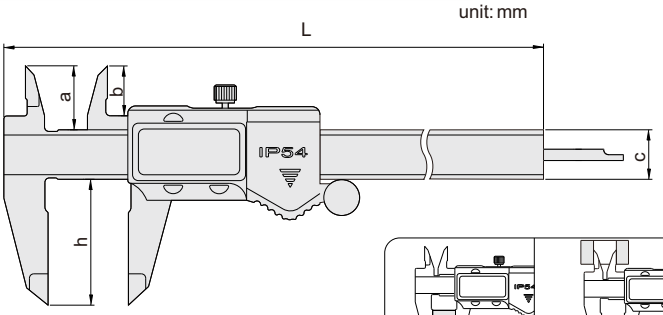

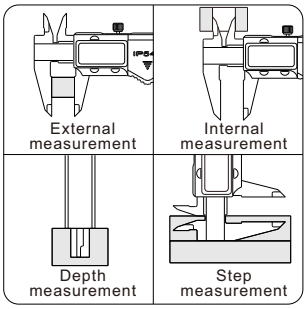

Code	Range	Accuracy	a	b	c	h	L
113-006-11	0-150mm/0-6"	±0.03mm	21	16	16	40	236
113-008-11	0-200mm/0-8"	±0.03mm	24	19	16	50	286
113-012-11	0-300mm/0-12"	±0.03mm	25	20.5	16	60	390

With manufacturer inspection certificate

SERIES 114 MINI DIGITAL CALIPER

Certificate LR44



114-004-11

- Resolution: 0.01mm/0.0005"
- Buttons: on/off, zero, mm/inch/F
- Meet DIN862
- Made of stainless steel

unit: mm

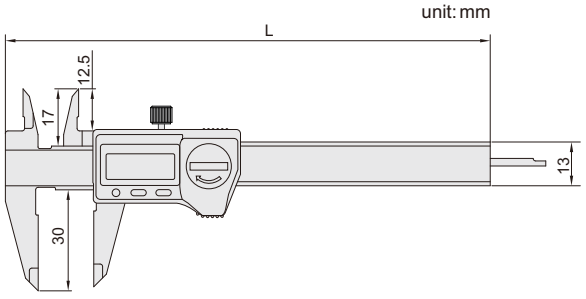

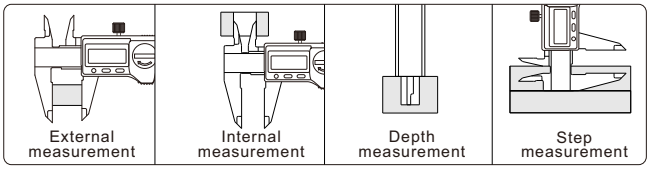

Code	Range	Accuracy	L
114-003-11	0-75mm/0-3"	±0.02mm	150
114-004-11	0-100mm/0-4"	±0.02mm	170

With manufacturer inspection certificate

117 PLASTIC DIGITAL CALIPER

LR44



unit: mm

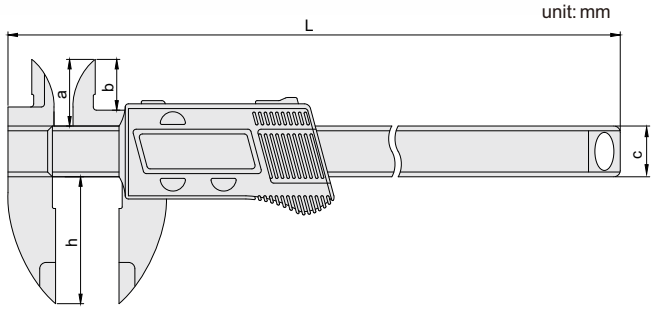

- Made of hard plastic
- Resolution: 0.01mm/0.0005"
- Buttons: on/off, zero, mm/inch

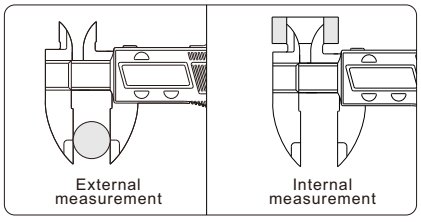

Code	Range	Accuracy	a	b	c	h	L
117-006-11	0-150mm/0-6"	±0.2mm	21	16	16	40	243

SERIES 123 VERNIER CALIPER (ANTI MAGNETIC)

ATTENTION: Not hardened

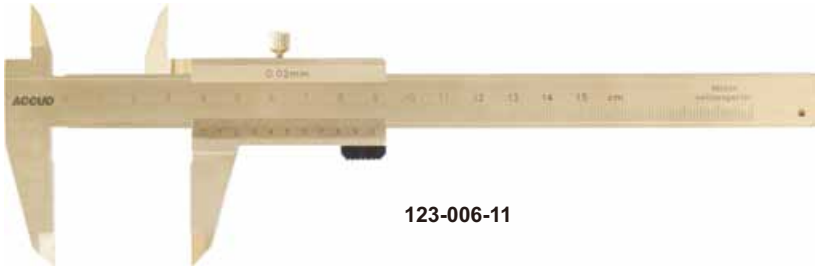

123-006-11

unit: mm

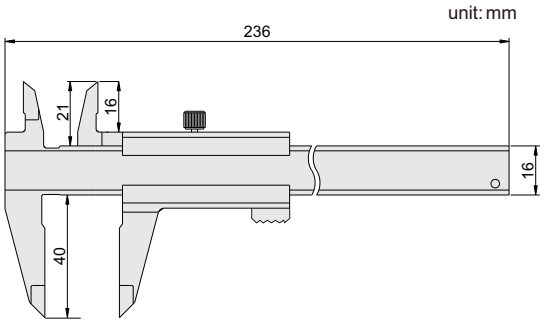

- Suitable for magnetic parts
- Made of pure copper

Graduation 0.02mm

Code	Range	Accuracy
123-006-11	0-150mm	±0.05mm

Graduation 0.05mm

Code	Range	Accuracy
123-006-13	0-150mm	±0.05mm

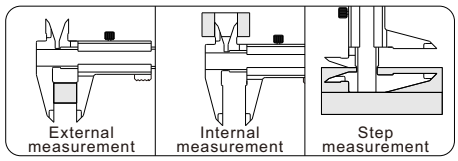

SERIES 101 DIAL CALIPER

Certificate Shockproof

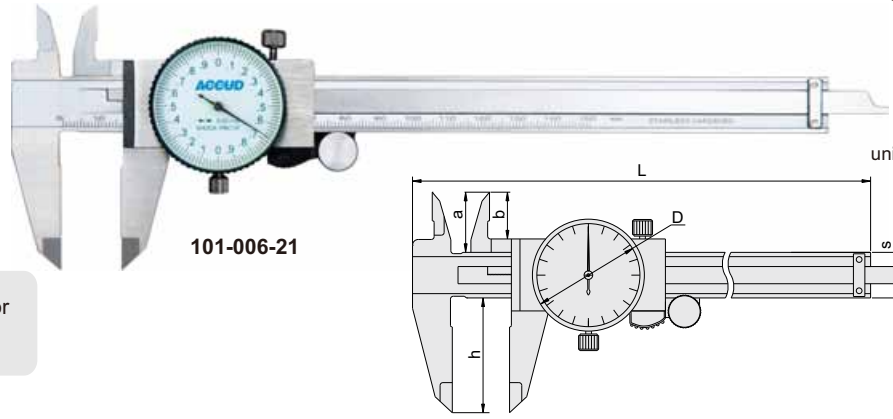

- Shockproof dial indicator
- Made of stainless steel

Graduation 0.01mm

Code	Range	Accuracy	a	b	c	h	s	D	L
101-006-11	0-150mm	±0.03mm	21	16.5	16	40	6.5	Ø39	235
101-008-11	0-200mm	±0.03mm	24	19	16	48	6.5	Ø39	288
101-012-11	0-300mm	±0.03mm	28	22	20	62	7.5	Ø44.5	410

Graduation 0.02mm

Code	Range	Accuracy	a	b	c	h	s	D	L
101-006-21	0-150mm	±0.03mm	21	16.5	16	40	6.5	Ø39	235
101-008-21	0-200mm	±0.03mm	24	19	16	48	6.5	Ø39	288
101-012-21	0-300mm	±0.03mm	28	22	20	62	7.5	Ø44.5	410

With manufacturer inspection certificate

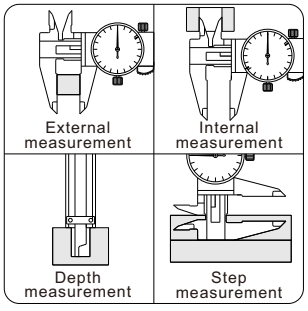

SERIES 101 DIAL CALIPER

Certificate Shockproof

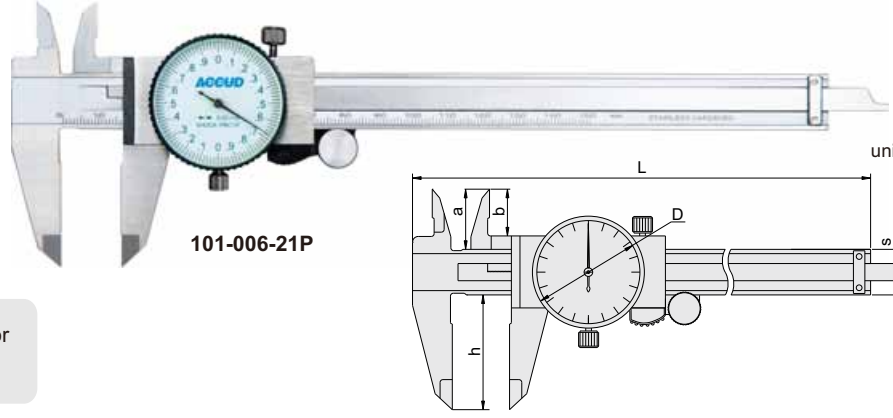

- Shockproof dial indicator
- Made of stainless steel

Graduation 0.01mm

Code	Range	Accuracy	a	b	c	h	s	D	L
101-006-11P	0-150mm	±0.03mm	21	16.5	16	40	6.5	Ø39	235
101-008-11P	0-200mm	±0.03mm	24	19	16	48	6.5	Ø39	288

Graduation 0.02mm

Code	Range	Accuracy	a	b	c	h	s	D	L
101-006-21P	0-150mm	±0.03mm	21	16.5	16	40	6.5	Ø39	235
101-008-21P	0-200mm	±0.03mm	24	19	16	48	6.5	Ø39	288

With manufacturer inspection certificate

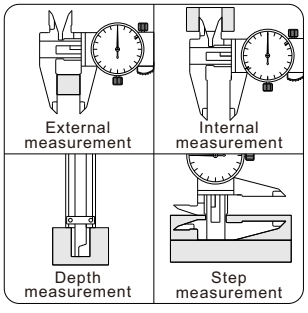

SERIES 101 INCH DIAL CALIPER

Shockproof



101-006-21I

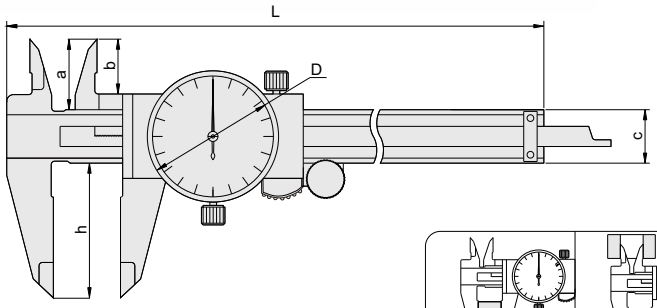

- Shockproof dial indicator
- Made of stainless steel

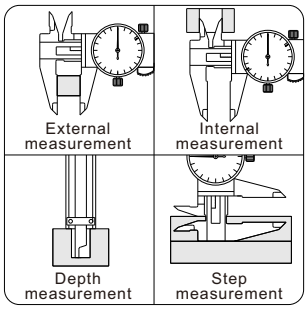

Code	Range	Graduation	Accuracy	a	b	c	h	D (DIA)	L
101-006-21I	0-6"	.001"	±.0015"	.827"	.650"	.630"	1.575"	1.535"	9.252"
101-008-21I	0-8"	.001"	±.0020"	.945"	.748"	.630"	1.890"	1.535"	11.339"
101-012-21I	0-12"	.001"	±.0020"	1.102"	.866"	.787"	2.441"	1.752"	16.142"

SERIES 101 DIAL CALIPER

Shockproof

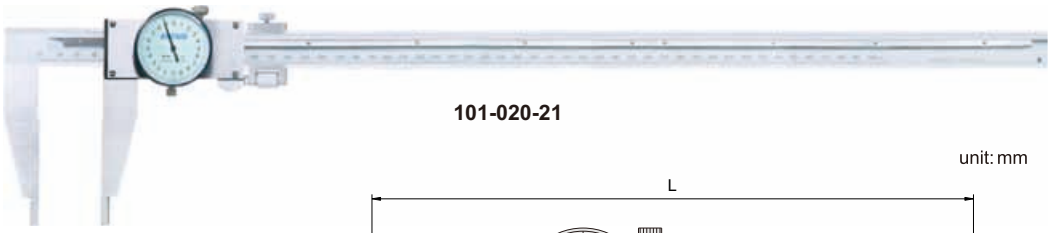

101-020-21

unit: mm

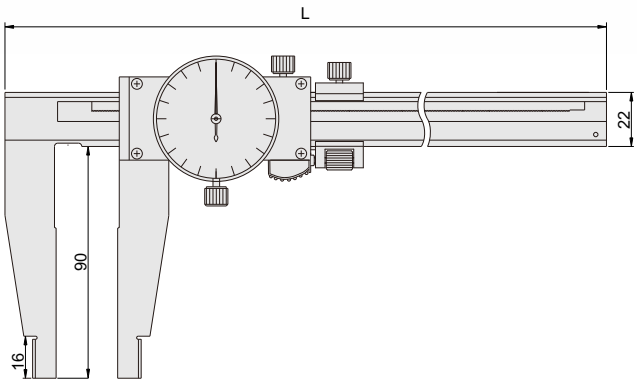

- Shockproof dial indicator
- Dial indicator graduation: 0.02mm
- Made of stainless steel

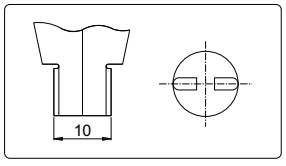

Code	Range	Accuracy	L
101-020-21	0-500mm	±0.05mm	640
101-024-21	0-600mm	±0.05mm	760

SERIES 103 DIAL CALIPER

Certificate Shockproof

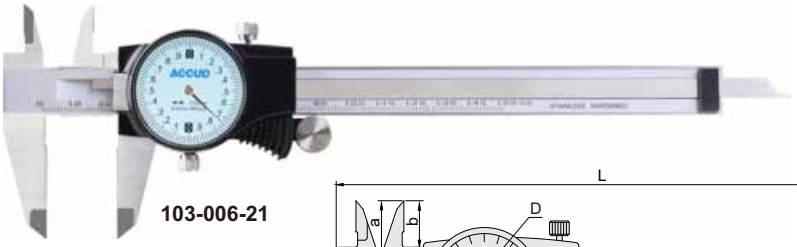

103-006-21

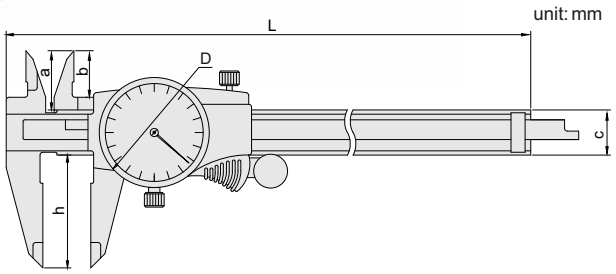

- Shockproof dial indicator
- Made of stainless steel

Graduation 0.01mm

Code	Range	Accuracy	a	b	c	h	D	L
103-006-11	0-150mm	±0.03mm	21	16.5	16	40	Ø39	233
103-008-11	0-200mm	±0.03mm	24	19	16	50	Ø39	288
103-012-11	0-300mm	±0.03mm	30	25	20	64	Ø44	390

Graduation 0.02mm

Code	Range	Accuracy	a	b	c	h	D	L
103-006-21	0-150mm	±0.03mm	21	16.5	16	40	Ø39	233
103-008-21	0-200mm	±0.03mm	24	19	16	50	Ø39	288
103-012-21	0-300mm	±0.03mm	30	25	20	64	Ø44	390

With manufacturer inspection certificate

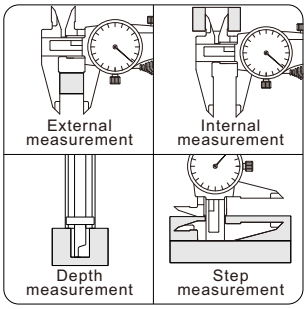

SERIES 120 VERNIER CALIPER

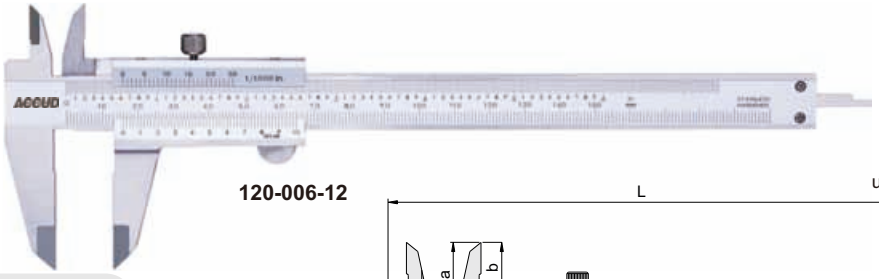

120-006-12

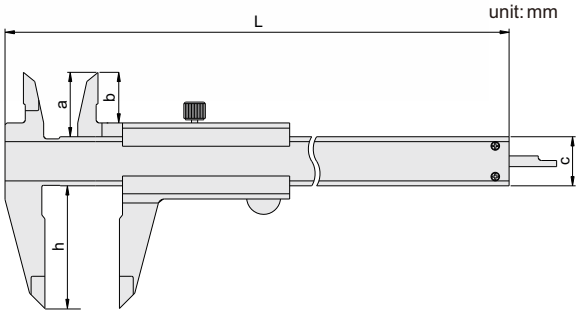

- Meet DIN862
- Satin chrome plated reading surface
- Made of stainless steel

Graduation 0.02mm/0.001"

Code	Range	Accuracy	a	b	c	h	L
120-006-12	0-150mm/0-6"	±0.03mm	20.5	15.5	16	40	235
120-008-12	0-200mm/0-8"	±0.03mm	23.5	19	16	50	290
120-012-12	0-300mm/0-12"	±0.03mm	29.5	24	20	62	414

Graduation 0.05mm/1/128"

Code	Range	Accuracy	a	b	c	h	L
120-006-14	0-150mm/0-6"	±0.05mm	20.5	15.5	16	40	235
120-008-14	0-200mm/0-8"	±0.05mm	23.5	19	16	50	290
120-012-14	0-300mm/0-12"	±0.05mm	29.5	24	20	62	414

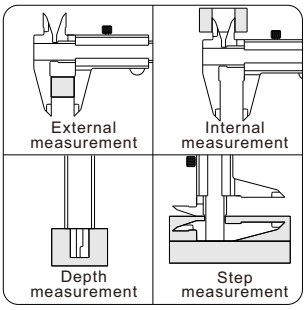

SERIES 120 VERNIER CALIPER WITH ROUND DEPTH BAR

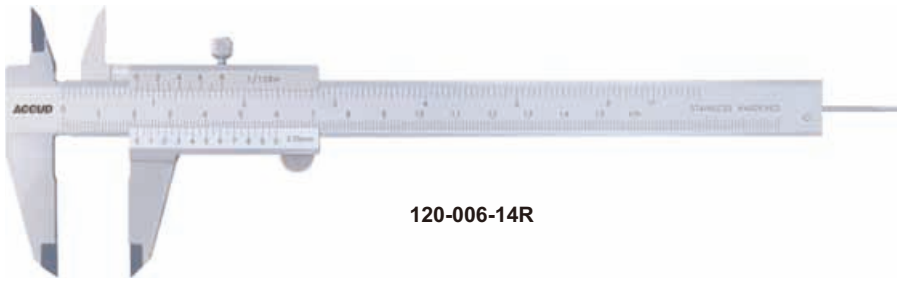

120-006-14R

- Meet DIN862
- Round depth bar
- Satin chrome plated reading surface
- Made of stainless steel

unit: mm

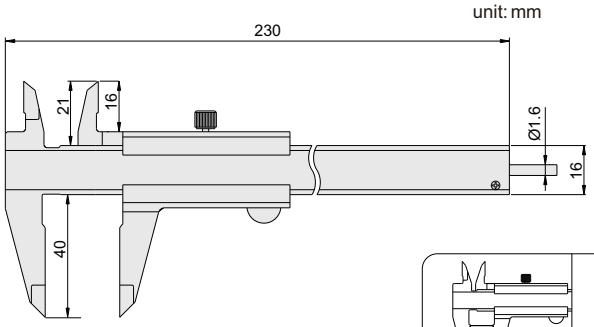

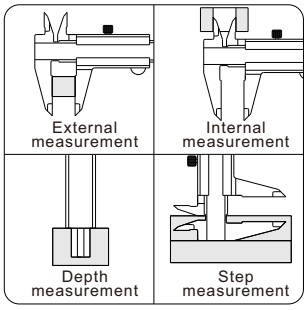

Graduation 0.02mm/0.001"

Code	Range	Accuracy
120-006-12R	0-150mm/0-6"	±0.05mm

Graduation 0.05mm/1/128"

Code	Range	Accuracy
120-006-14R	0-150mm/0-6"	±0.05mm

SERIES 120 VERNIER CALIPER

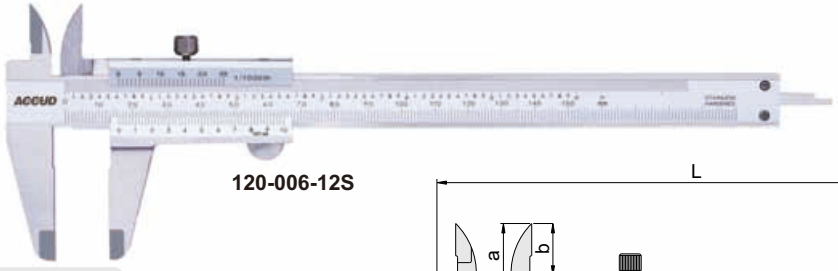

120-006-12S

- Meet DIN862
- Satin chrome plated reading surface
- Made of stainless steel

unit: mm

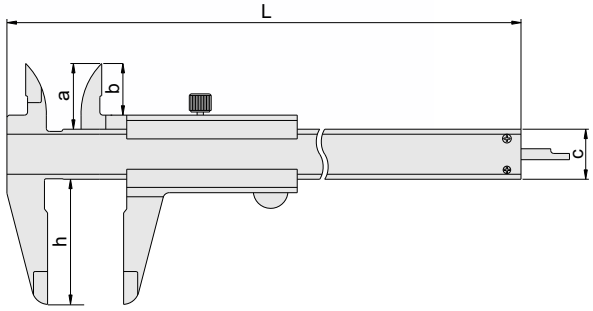

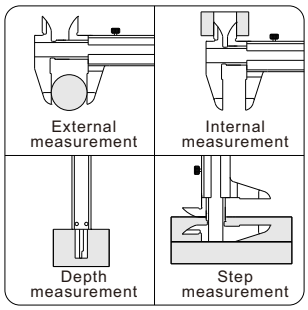

Graduation 0.02mm/0.001"

Code	Range	Accuracy	a	b	c	h	L
120-006-12S	0-150mm/0-6"	±0.03mm	20.5	15.5	16	40	235
120-008-12S	0-200mm/0-8"	±0.03mm	23.5	19	16	50	290
120-012-12S	0-300mm/0-12"	±0.03mm	27.5	22	20	64	414

Graduation 0.05mm/1/128"

Code	Range	Accuracy	a	b	c	h	L
120-006-14S	0-150mm/0-6"	±0.05mm	20.5	15.5	16	40	235
120-008-14S	0-200mm/0-8"	±0.05mm	23.5	19	16	50	290
120-012-14S	0-300mm/0-12"	±0.05mm	27.5	22	20	64	414

SERIES 124 VERNIER CALIPER



124-006-14

unit: mm

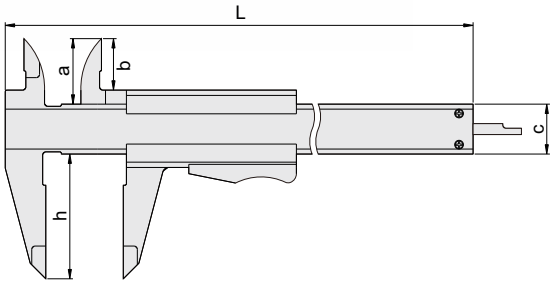

- With auto thumb clamp
- Meet DIN862
- Satin chrome plated reading surface
- Made of stainless steel

Graduation 0.02mm/0.001"

Code	Range	Accuracy	a	b	c	h	L
124-006-12	0-150mm/0-6"	±0.03mm	20.5	15.5	16	40	235
124-008-12	0-200mm/0-8"	±0.03mm	23.5	19	16	50	290

Graduation 0.05mm/1/128"

Code	Range	Accuracy	a	b	c	h	L
124-006-14	0-150mm/0-6"	±0.05mm	20.5	15.5	16	40	235
124-008-14	0-200mm/0-8"	±0.05mm	23.5	19	16	50	290

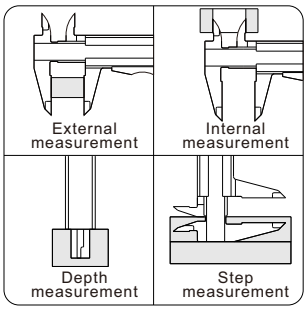

SERIES 125 VERNIER CALIPER

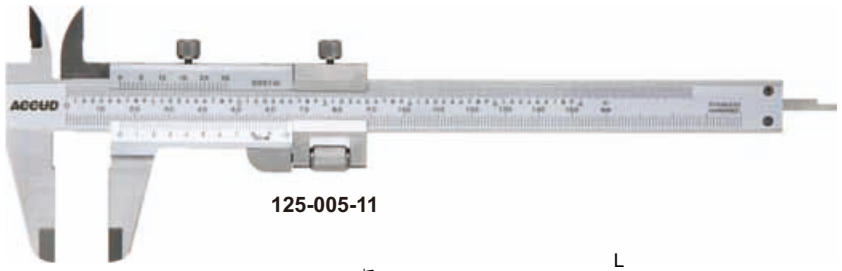

125-005-11

unit: mm

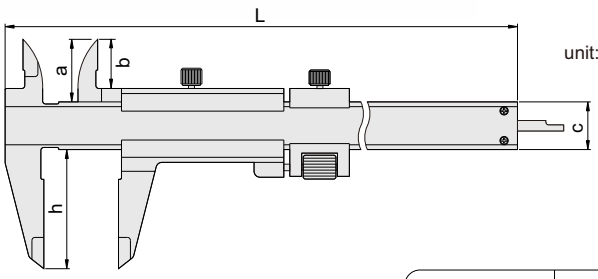

- With fine adjustment
- Graduation: 0.02mm/0.001"
- Meet DIN862
- Satin chrome plated reading surface
- Made of stainless steel

Code	Range	Accuracy	a	b	c	h	L
125-005-11	0-130mm/0-5"	±0.03mm	20.5	16.5	16	40	230
125-007-11	0-180mm/0-7"	±0.03mm	23.5	19	16	50	295
125-011-11	0-280mm/0-11"	±0.03mm	27.5	22	20	60	410

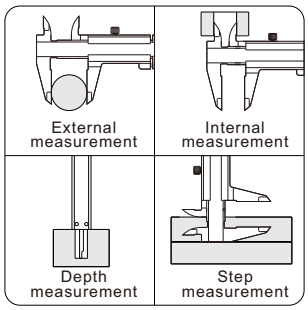

SERIES 121 MINI VERNIER CALIPER

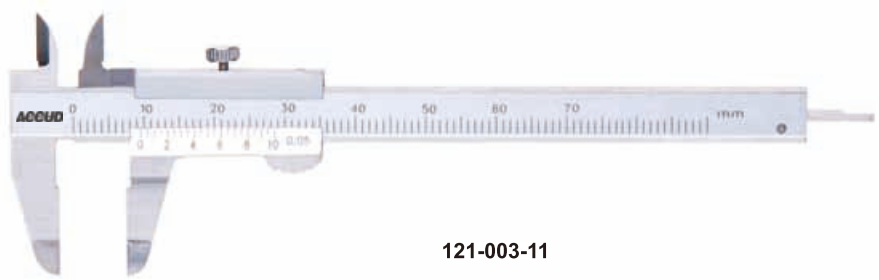

121-003-11

unit: mm

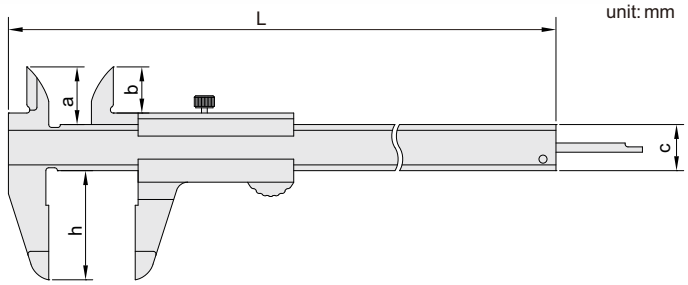

- Meet DIN862
- Satin chrome plated reading surface
- Made of stainless steel

Code	Range	Graduation	Accuracy	a	b	h	L	C
121-003-11	0-70mm	0.05mm	±0.05mm	10	8	19	113	8
121-004-11	0-100mm	0.05mm	±0.05mm	17	13	30	160	12

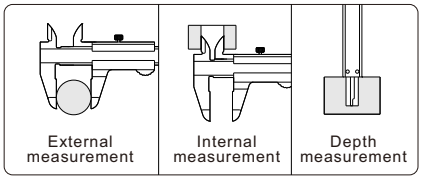

121 MINI VERNIER CALIPER

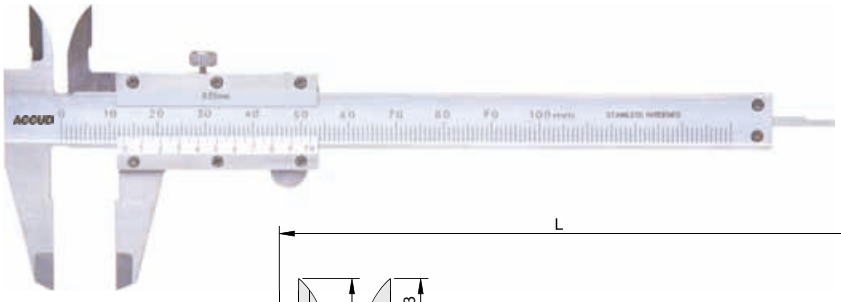

unit: mm

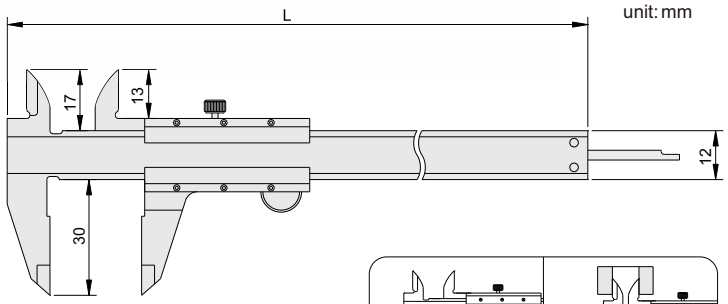

- Meet DIN862
- Made of stainless steel
- Satin chrome plated reading surface

Code	Range	Graduation	Accuracy	L
121-004-11B	0-100mm	0.05mm	±0.05mm	160

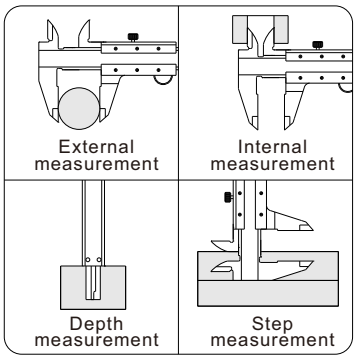

SERIES 150 DIGITAL CALIPER

Data output | CR2032

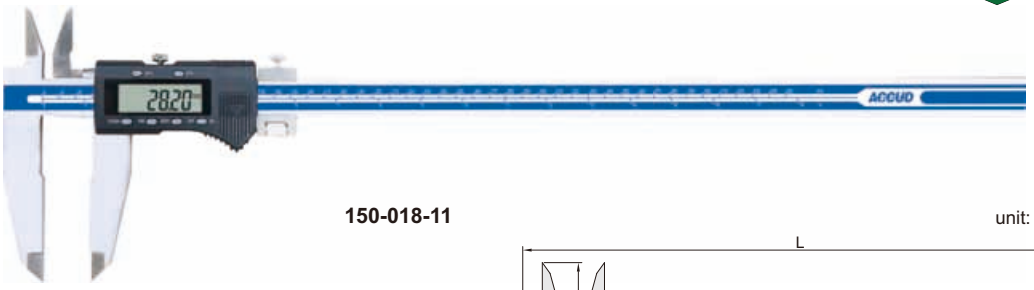

150-018-11

unit: mm

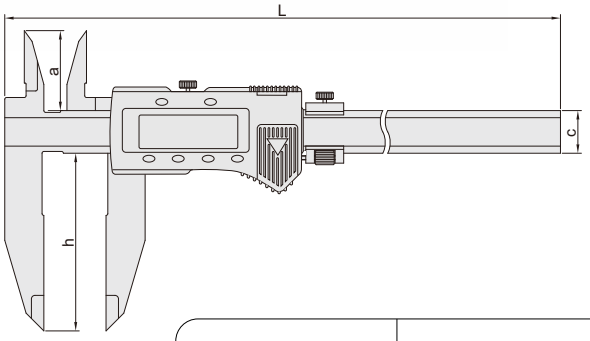

- Resolution: 0.01mm/0.0005"
- Button function: on/off, zero, mm/inch, ABS, data preset
- Data output(cable code:100-15)
- Made of stainless steel

Code	Range	Accuracy	a	c	h	L
150-018-11	0-450mm/0-18"	±0.05mm	45	24	100	610
150-024-11	0-600mm/0-24"	±0.05mm	45	24	100	770
150-040-11	0-1000mm/0-40"	±0.08mm	60	31	150	1220

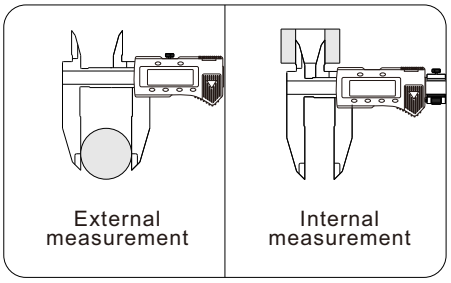

SERIES 118 DIGITAL CALIPER

Data output | CR2032

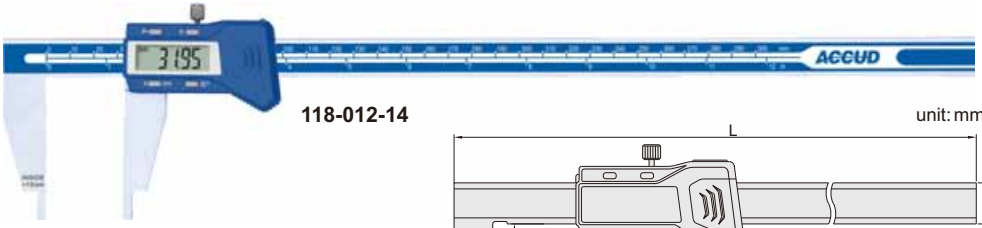

118-012-14

unit: mm

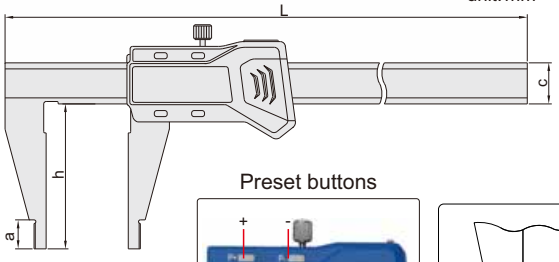

Preset buttons



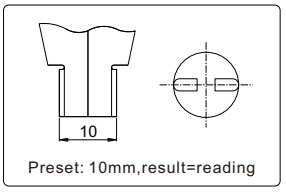

- Resolution: 0.01mm/0.0005"
- Buttons: mm/in, SET, preset(P+,P-)
- Automatic power on/off
- Data output(cable code:100-03 or 100-04)
- Made of stainless steel

Code	Range	Accuracy	a	c	h	L
118-008-11	0-200mm/0-8"	±0.03mm	12	17	60	320
118-012-14	0-300mm/0-12"	±0.04mm	12	17	60	420
118-012-15	0-300mm/0-12"	±0.06mm	12	17	90	420

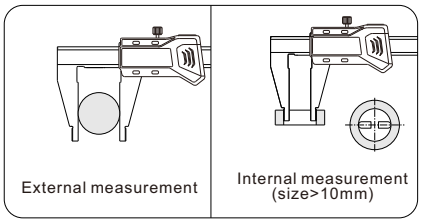

SERIES 118 DIGITAL CALIPER

Data output

CR2032

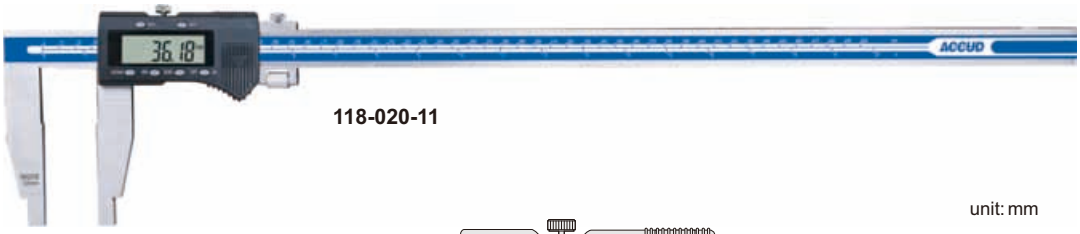

118-020-11

unit: mm

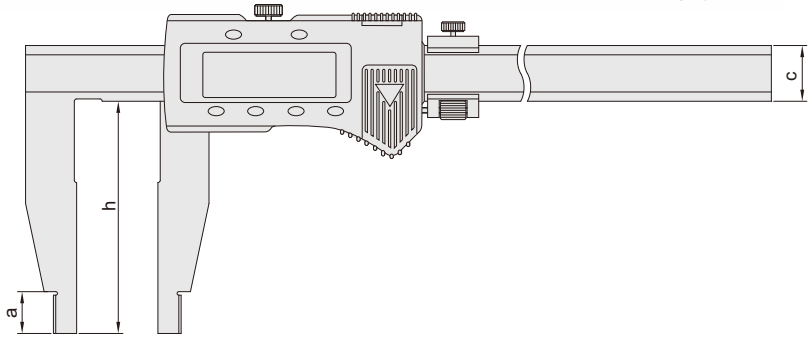

- Resolution: 0.01mm/0.0005"
- Buttons: on/off, zero, mm/inch, ABS, data preset
- Data output(cable code:100-15)
- Made of stainless steel

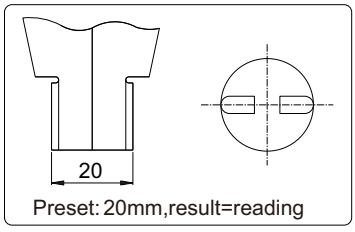

Preset: 20mm,result=reading

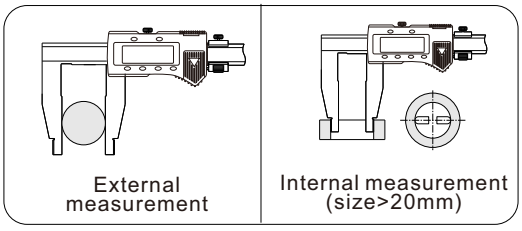

External measurement

Internal measurement (size>20mm)

Code	Range	Accuracy	a	c	h
118-012-11	0-300mm/0-12"	±0.04mm	18	24	100
118-012-12	0-300mm/0-12"	±0.05mm	18	24	150
118-012-13	0-300mm/0-12"	±0.05mm	18	24	200
118-018-11	0-450mm/0-18"	±0.05mm	18	24	100
118-020-11	0-500mm/0-20"	±0.05mm	18	24	100
118-020-12	0-500mm/0-20"	±0.06mm	18	24	150
118-020-13	0-500mm/0-20"	±0.06mm	24	32	200
118-020-14	0-500mm/0-20"	±0.08mm	24	42	300
118-024-11	0-600mm/0-24"	±0.05mm	18	24	100
118-024-12	0-600mm/0-24"	±0.06mm	18	24	150
118-024-13	0-600mm/0-24"	±0.06mm	24	32	200
118-024-15	0-600mm/0-24"	±0.08mm	24	42	300
118-032-11	0-800mm/0-32"	±0.07mm	24	32	150
118-040-11	0-1000mm/0-40"	±0.08mm	24	32	150
118-040-12	0-1000mm/0-40"	±0.08mm	24	32	200
118-040-13	0-1000mm/0-40"	±0.10mm	24	42	300
118-048-11	0-1200mm/0-48"	±0.11mm	24	42	150
118-060-11	0-1500mm/0-60"	±0.11mm	24	42	150
118-060-12	0-1500mm/0-60"	±0.12mm	24	42	200
118-080-11	0-2000mm/0-80"	±0.14mm	24	42	150
118-080-12	0-2000mm/0-80"	±0.14mm	24	42	200

119 DIGITAL CALIPER

Data output | CR2032

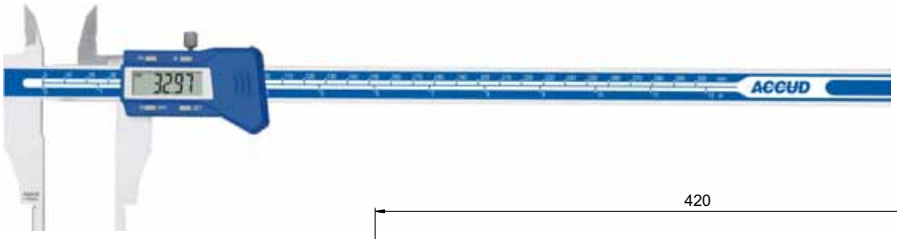

unit: mm

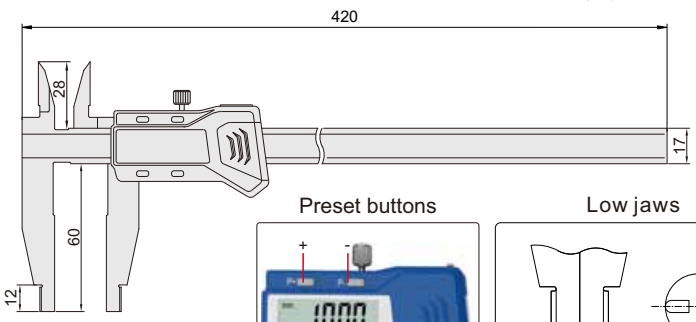

Preset buttons

Low jaws

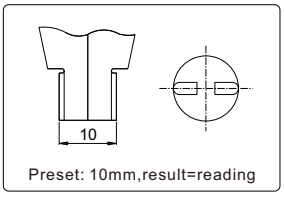

Preset: 10mm,result=reading

- Resolution: 0.01mm/0.0005"
- Buttons: mm/in, SET, preset(P+,P-)
- Automatic power on/off
- Data output(cable code:100-03 or 100-04)
- Made of stainless steel

Code	Range	Accuracy
119-012-11	0-300mm/0-12"	±0.04mm

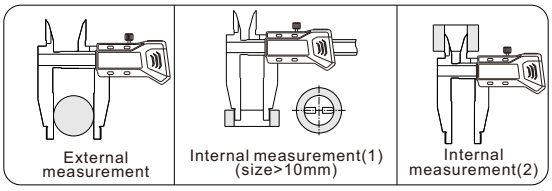

SERIES 119 DIGITAL CALIPER

Data output | CR2032

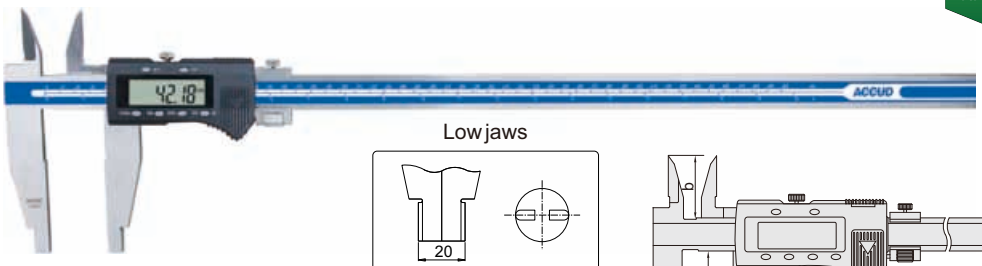

119-020-11

Low jaws

Preset: 20mm,result=reading

unit: mm

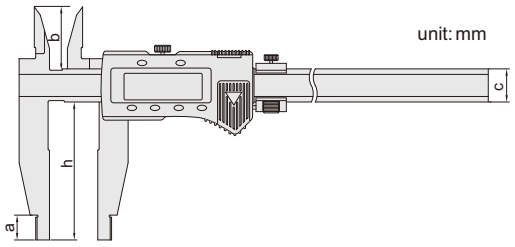

Code	Range	Accuracy	a	b	c	h
119-012-12	0-300mm/0-12"	±0.05mm	18	45	24	100
119-018-11	0-450mm/0-18"	±0.05mm	18	45	24	100
119-020-11	0-500mm/0-20"	±0.05mm	18	45	24	100
119-020-12	0-500mm/0-20"	±0.06mm	18	45	24	150
119-020-13	0-500mm/0-20"	±0.06mm	24	60	32	200
119-024-11	0-600mm/0-24"	±0.05mm	18	45	24	100
119-024-12	0-600mm/0-24"	±0.06mm	18	45	24	150
119-024-14	0-600mm/0-24"	±0.06mm	24	60	32	200
119-040-11	0-1000mm/0-40"	±0.08mm	24	60	32	150
119-040-12	0-1000mm/0-40"	±0.08mm	24	60	32	200
119-060-11	0-1500mm/0-60"	±0.11mm	24	60	42	150
119-060-12	0-1500mm/0-60"	±0.12mm	24	60	42	200
119-080-11	0-2000mm/0-80"	±0.14mm	24	60	42	150

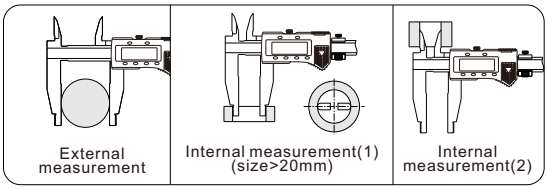

- Resolution: 0.01mm/0.0005"
- Buttons: on/off, zero, mm/inch, ABS, data preset
- Data output(cable code:100-15)
- Made of stainless steel

SERIES 130 DIGITAL CALIPER

Data output | CR2032

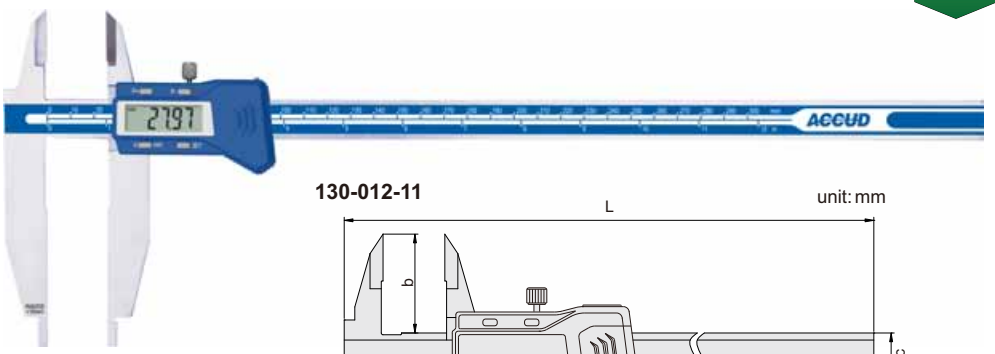

130-012-11

unit: mm

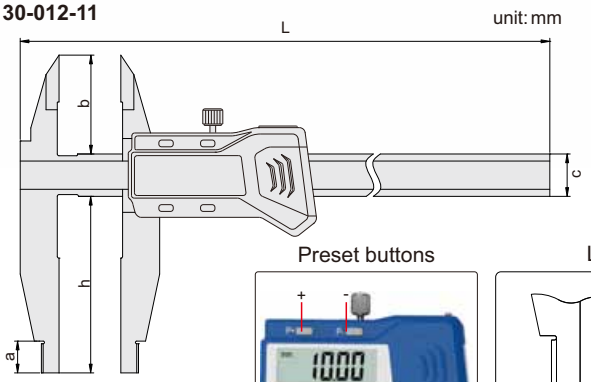

- Resolution: 0.01mm/0.0005"
- Buttons: mm/in, SET, preset(P+,P-)
- Automatic power on/off
- Data output(cable code:100-03 or 100-04)
- Made of stainless steel

Preset buttons

Low jaws

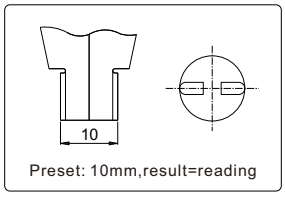

Code	Range	Accuracy	a	b	c	h	L
130-008-11	0-200mm/0-8"	±0.03mm	12	38	17	60	320
130-012-11	0-300mm/0-12"	±0.04mm	12	38	17	60	420
130-012-12	0-300mm/0-12"	±0.04mm	12	38	17	90	420

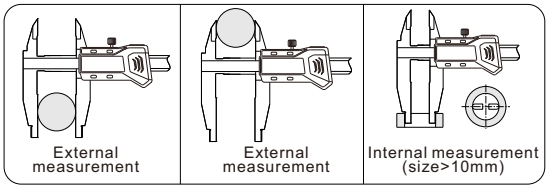

SERIES 131 DIGITAL CALIPER

Data output | CR2032

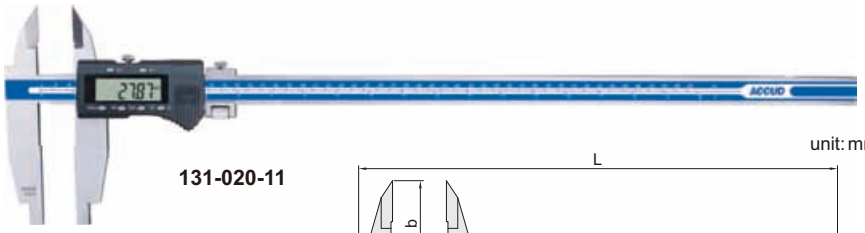

131-020-11

unit: mm

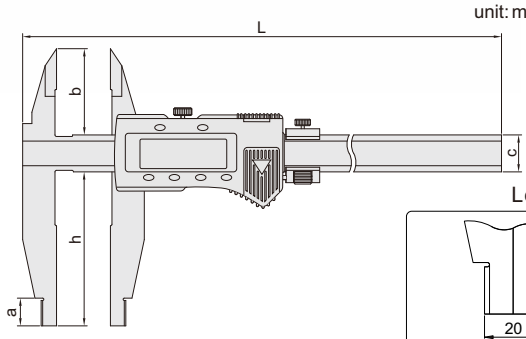

- Resolution: 0.01mm/0.0005"
- Buttons: on/off, zero, mm/inch, ABS, data preset
- Data output(cable code:100-15)
- Made of stainless steel

Low jaws

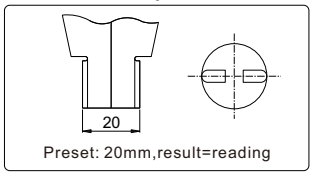

Code	Range	Accuracy	a	b	c	h	L
131-012-11	0-300mm/0-12"	±0.05mm	18	56	24	100	470
131-020-11	0-500mm/0-20"	±0.05mm	18	56	24	100	675
131-020-12	0-500mm/0-20"	±0.06mm	18	56	24	150	675
131-024-11	0-600mm/0-24"	±0.05mm	18	56	24	100	770
131-028-11	0-800mm/0-32"	±0.07mm	24	67	31	150	1025
131-040-11	0-1000mm/0-40"	±0.08mm	24	67	31	150	1220

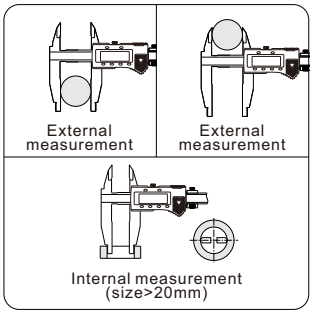

SERIES 126 VERNIER CALIPER

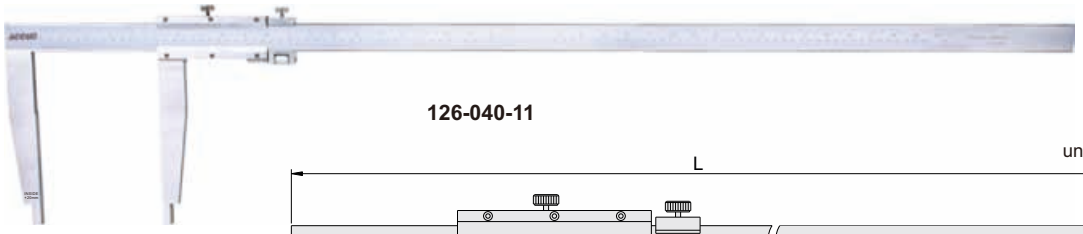

126-040-11

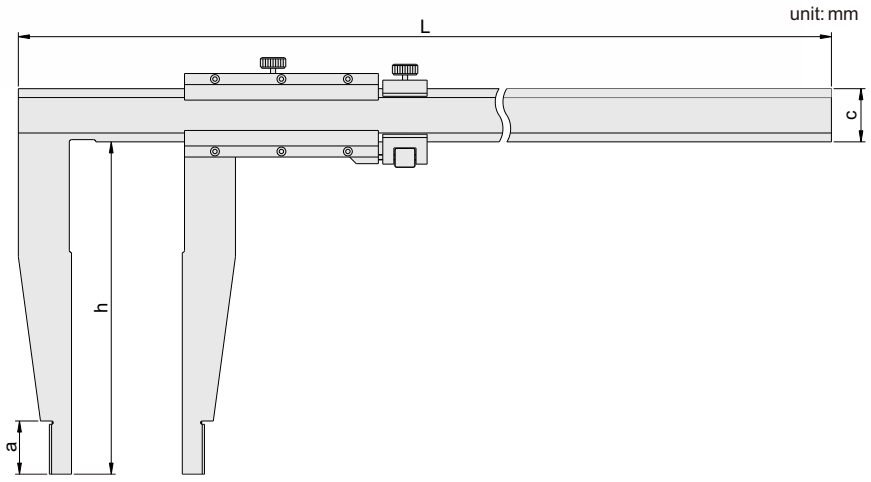

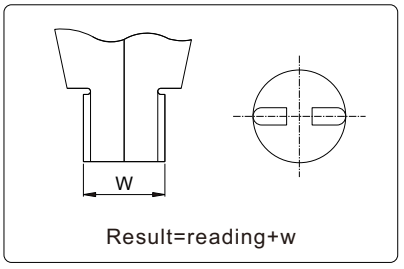

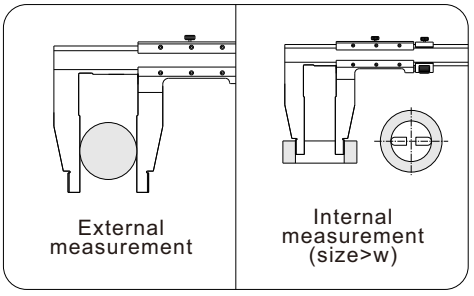

- With fine adjustment
- Made of stainless steel
- Satin chrome reading surface

Graduation 0.02mm/0.001"

Code	Range	Accuracy	a	c	h	w	L
126-012-11	0-300mm/0-12"	±0.05mm	12	17	90	10	410
126-012-12	0-300mm/0-12"	±0.05mm	18	24	150	20	470
126-020-11	0-500mm/0-20"	±0.06mm	18	24	150	20	670
126-020-12	0-500mm/0-20"	±0.06mm	18	24	200	20	670
126-024-11	0-600mm/0-24"	±0.06mm	18	24	150	20	770
126-024-12	0-600mm/0-24"	±0.08mm	24	32	250	20	820
126-040-11	0-1000mm/0-40"	±0.08mm	24	32	200	20	1220
126-040-12	0-1000mm/0-40"	±0.11mm	24	32	300	20	1330
126-120-12	0-3000mm/0-120"	±0.26mm	24	50	300	20	3360

Graduation 0.05mm/1/128"

Code	Range	Accuracy	a	c	h	w	L
126-012-51	0-300mm/0-12"	±0.07mm	12	17	90	10	410
126-012-52	0-300mm/0-12"	±0.07mm	18	24	150	20	470
126-020-51	0-500mm/0-20"	±0.08mm	18	24	150	20	670
126-020-52	0-500mm/0-20"	±0.08mm	18	24	200	20	670
126-024-51	0-600mm/0-24"	±0.08mm	18	24	150	20	770
126-024-52	0-600mm/0-24"	±0.08mm	24	32	250	20	820
126-040-51	0-1000mm/0-40"	±0.12mm	24	32	200	20	1220
126-040-52	0-1000mm/0-40"	±0.12mm	24	32	300	20	1330
126-120-52	0-3000mm/0-120"	±0.31mm	24	50	300	20	3360

SERIES 127 VERNIER CALIPER

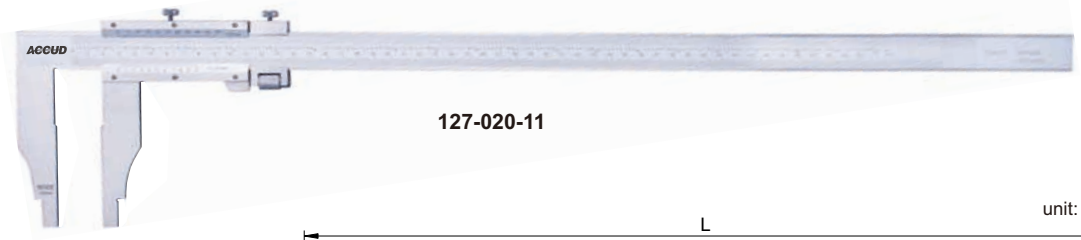

127-020-11

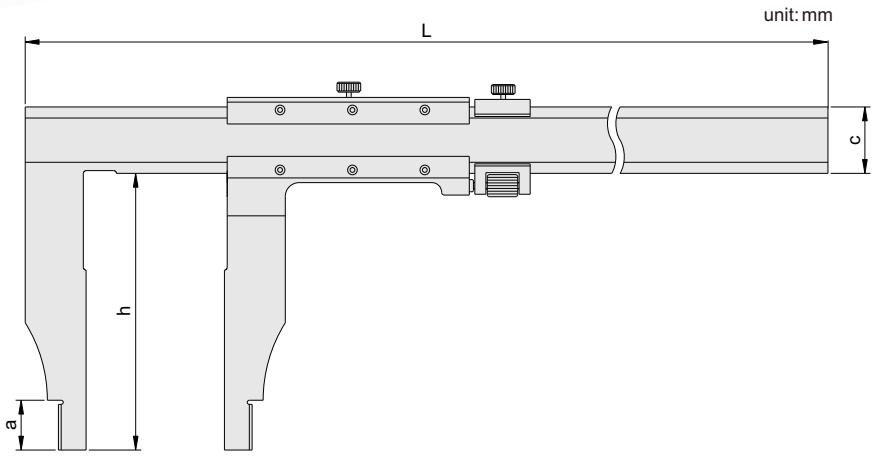

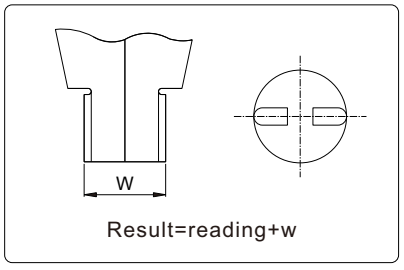

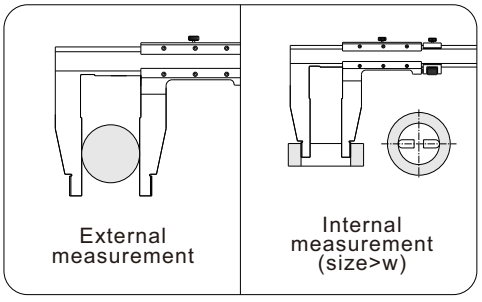

- With fine adjustment
- Made of stainless steel
- Satin chrome reading surface

Graduation 0.02mm/0.001"

Code	Range	Accuracy	a	c	h	w	L
127-012-11	0-300mm/0-12"	±0.05mm	10	20	75	10	410
127-018-11	0-450mm/0-18"	±0.05mm	18	24	100	20	620
127-020-11	0-500mm/0-20"	±0.05mm	18	24	100	20	670
127-024-11	0-600mm/0-24"	±0.05mm	18	24	100	20	770
127-032-11	0-800mm/0-32"	±0.08mm	24	32	150	20	1020
127-040-11	0-1000mm/0-40"	±0.08mm	24	32	140	20	1216
127-060-11	0-1500mm/0-60"	±0.11mm	24	42	180	20	1830
127-080-11	0-2000mm/0-80"	±0.14mm	24	42	200	20	2320

Graduation 0.05mm/1/128"

Code	Range	Accuracy	a	c	h	w	L
127-012-51	0-300mm/0-12"	±0.05mm	10	20	75	10	410
127-018-51	0-450mm/0-18"	±0.05mm	18	24	100	20	620
127-020-51	0-500mm/0-20"	±0.08mm	18	24	100	20	670
127-024-51	0-600mm/0-24"	±0.08mm	18	24	100	20	770
127-040-51	0-1000mm/0-40"	±0.10mm	24	32	140	20	1216
127-060-51	0-1500mm/0-60"	±0.15mm	24	42	180	20	1830
127-080-51	0-2000mm/0-80"	±0.20mm	24	42	200	20	2320

SERIES 128 VERNIER CALIPER

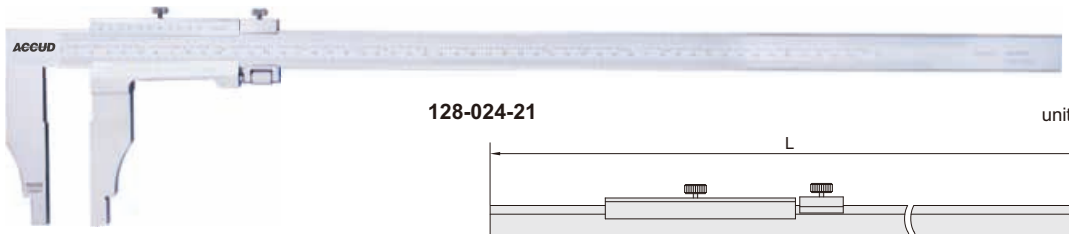

128-024-21

unit: mm

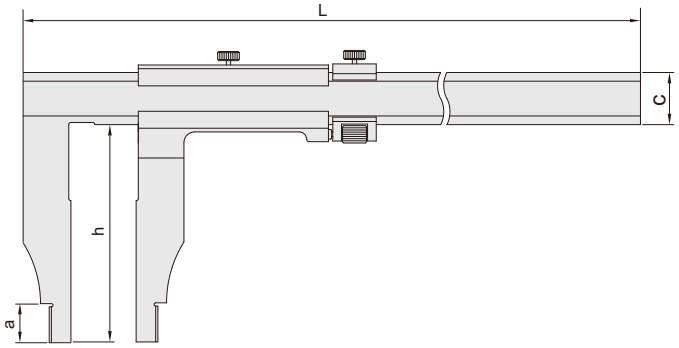

- Made of stainless steel
- With fine adjustment
- Satin chrome plated reading surface

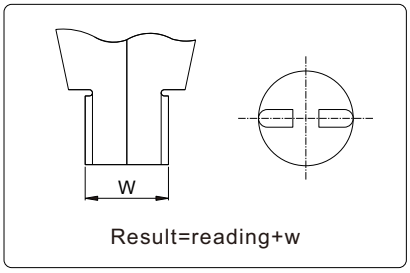

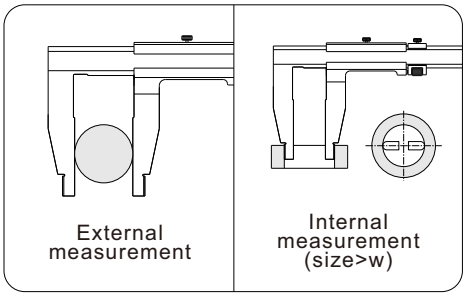

Graduation 0.02mm/0.001"

Code	Range	Accuracy	a	c	h	w	L
128-008-21	0-200mm/0-8"	±0.05mm	12	20	100	10	330
128-012-21	0-300mm/0-12"	±0.05mm	18	24	90	20	410
128-012-22	0-300mm/0-12"	±0.07mm	18	24	150	20	410
128-020-21	0-500mm/0-20"	±0.05mm	18	24	100	20	670
128-020-22	0-500mm/0-20"	±0.06mm	18	24	150	20	670
128-024-21	0-600mm/0-24"	±0.06mm	18	24	100	20	770
128-024-22	0-600mm/0-24"	±0.08mm	18	24	150	20	770
128-040-21	0-1000mm/0-40"	±0.08mm	24	32	150	20	1230
128-060-21	0-1500mm/0-60"	±0.11mm	24	42	150	20	1820
128-080-21	0-2000mm/0-80"	±0.14mm	24	42	150	20	2230

Graduation 0.05mm/1/128"

Code	Range	Accuracy	a	c	h	w	L
128-008-51	0-200mm/0-8"	±0.06mm	12	20	100	10	330
128-012-51	0-300mm/0-12"	±0.07mm	18	24	90	20	410
128-012-52	0-300mm/0-12"	±0.07mm	18	24	150	20	410
128-020-51	0-500mm/0-20"	±0.08mm	18	24	100	20	670
128-020-52	0-500mm/0-20"	±0.08mm	18	24	150	20	670
128-024-51	0-600mm/0-24"	±0.08mm	18	24	100	20	770
128-024-52	0-600mm/0-24"	±0.09mm	18	24	150	20	770
128-032-51	0-800mm/0-32"	±0.09mm	24	31	150	20	1030
128-040-51	0-1000mm/0-40"	±0.12mm	24	32	150	20	1230
128-060-51	0-1500mm/0-60"	±0.16mm	24	42	150	20	1820
128-080-51	0-2000mm/0-80"	±0.20mm	24	42	150	20	2230

SERIES 129 VERNIER CALIPER

- Made of stainless steel
- With fine adjustment
- Satin chrome plated reading surface

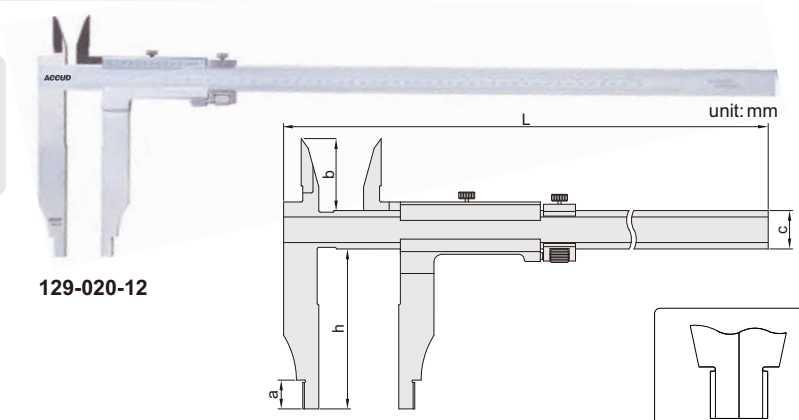

129-020-12

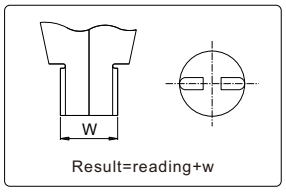

Graduation 0.02mm/0.001"

Code	Range	Accuracy	a	b	c	h	w	L
129-020-11	0-500mm/0-20"	±0.05mm	18	45	24	100	20	670
129-020-12	0-500mm/0-20"	±0.06mm	18	45	24	150	20	670
129-024-11	0-600mm/0-24"	±0.06mm	18	45	24	100	20	770
129-040-11	0-1000mm/0-40"	±0.08mm	24	60	31	150	20	1230

Graduation 0.05mm/1/128"

Code	Range	Accuracy	a	b	c	h	w	L
129-020-51	0-500mm/0-20"	±0.07mm	18	45	24	100	20	670
129-020-52	0-500mm/0-20"	±0.08mm	18	45	24	150	20	670
129-024-51	0-600mm/0-24"	±0.08mm	18	45	24	100	20	770
129-040-51	0-1000mm/0-40"	±0.12mm	24	60	31	150	20	1230

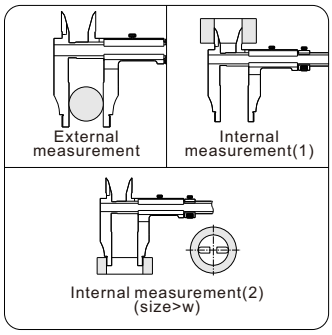

SERIES 120 VERNIER CALIPER (SOLID TYPE)

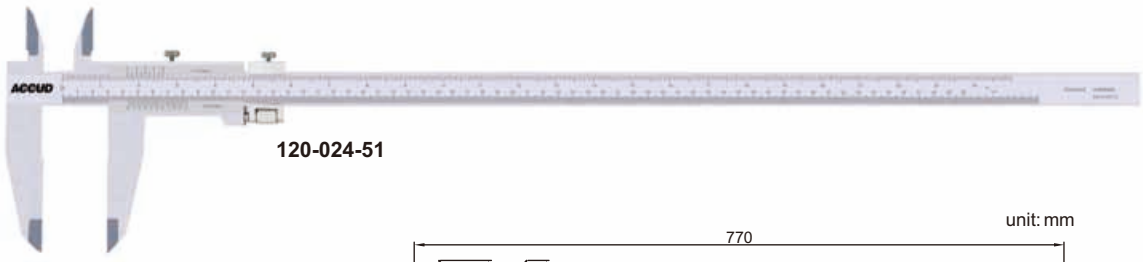

120-024-51

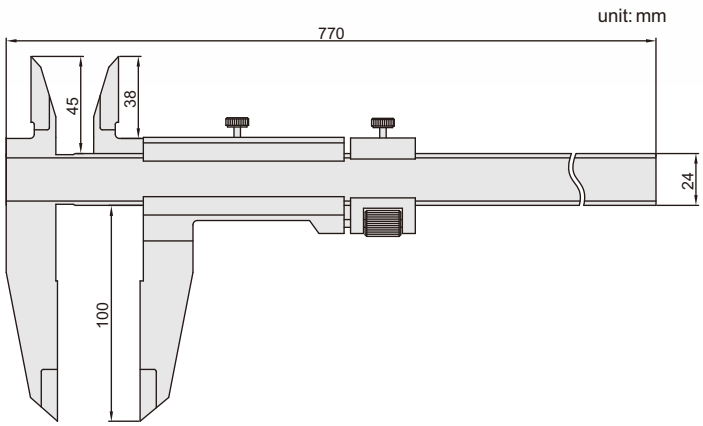

- Made of stainless steel
- Satin chrome plated reading surface

Graduation 0.02mm/0.001"

code	Range	Accuracy
120-024-11	0-600mm/0-24"	±0.06mm

Graduation 0.05mm/1/128"

code	Range	Accuracy
120-024-51	0-600mm/0-24"	±0.08mm

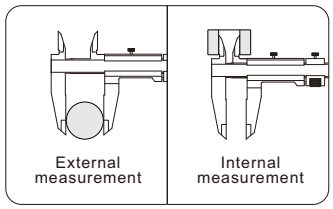

SERIES 122 VERNIER CALIPER

- With fine adjustment
- Made of stainless steel
- Satin chrome reading surface

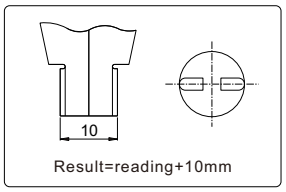

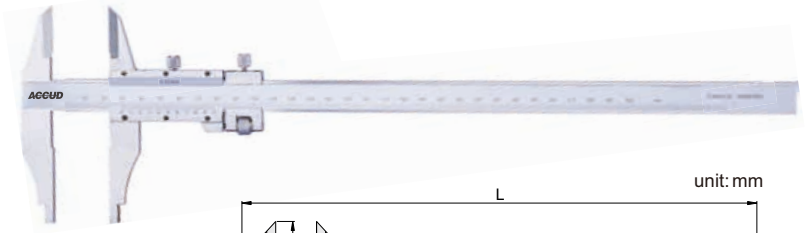

122-012-11

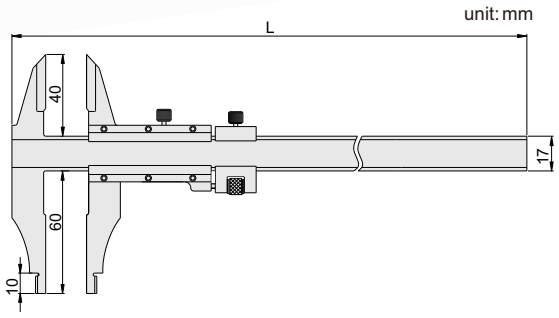

Graduation: 0.02mm

Code	Range	Accuracy	L
122-010-11	0-250mm	±0.03mm	360
122-012-11	0-300mm	±0.03mm	410

Graduation: 0.05mm

Code	Range	Accuracy	L
122-010-13	0-250mm	±0.05mm	360
122-012-13	0-300mm	±0.05mm	410

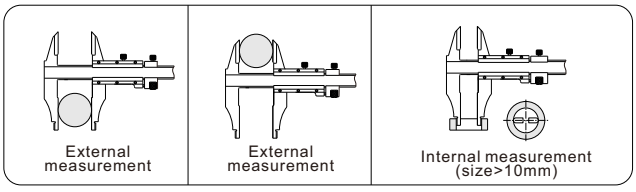

SERIES 122 VERNIER CALIPER

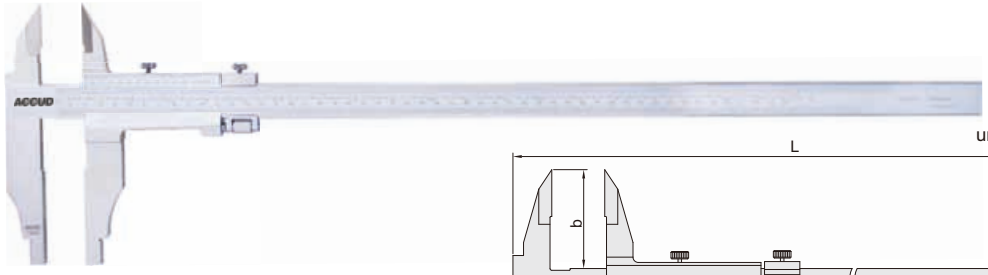

122-020-21

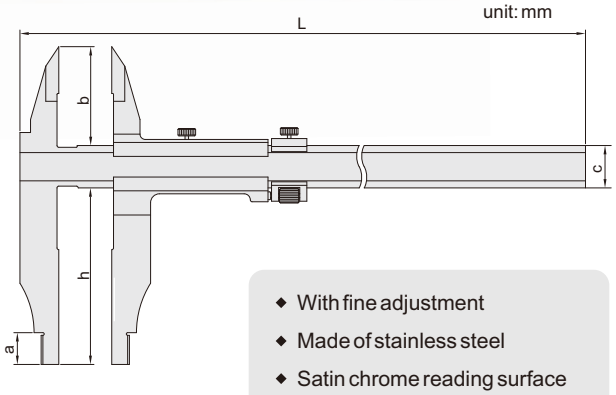

- With fine adjustment
- Made of stainless steel
- Satin chrome reading surface

Graduation: 0.02mm/0.001"

Code	Range	Accuracy	h	a	b	c	w	L
122-012-21	0-300mm/0-12"	±0.05mm	90	12	40	20	10	410
122-020-21	0-500mm/0-20"	±0.05mm	100	18	56	24	20	670
122-020-22	0-500mm/0-20"	±0.06mm	150	18	56	24	20	670
122-032-21	0-800mm/0-32"	±0.07mm	150	24	67	31	20	1020
122-040-21	0-1000mm/0-40"	±0.08mm	150	24	67	31	20	1220

Graduation: 0.05mm/1/128"

Code	Range	Accuracy	h	a	b	c	w	L
122-012-51	0-300mm/0-12"	±0.07mm	90	12	40	20	10	410
122-020-51	0-500mm/0-20"	±0.07mm	100	18	56	24	20	670
122-020-52	0-500mm/0-20"	±0.08mm	150	18	56	24	20	670
122-032-51	0-800mm/0-32"	±0.09mm	150	24	67	31	20	1020
122-040-51	0-1000mm/0-40"	±0.12mm	150	24	67	31	20	1220

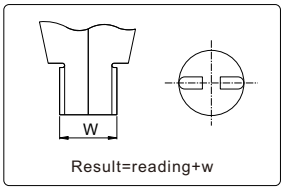

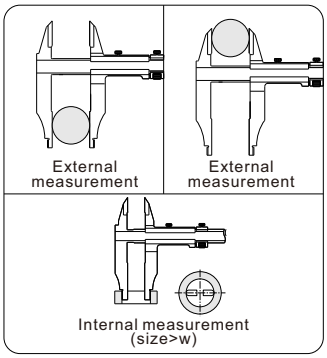

SERIES 133 DIGITAL OUTSIDE NECK CALIPER

Data output | CR2032

VIDEO

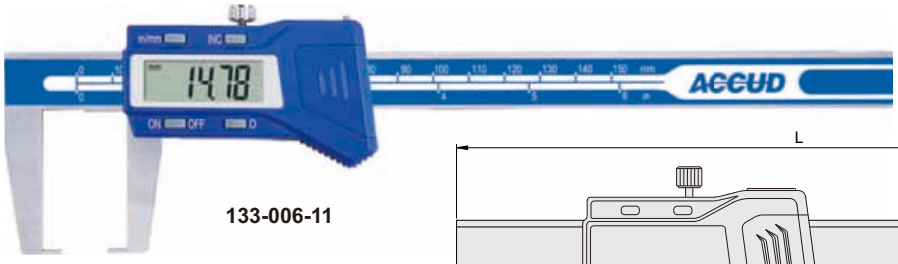

133-006-11

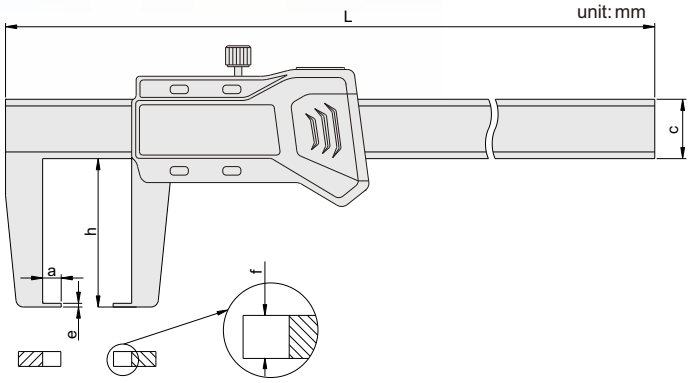

- Measure wall thickness and recesses
- Resolution: 0.01mm/0.0005"
- Automatic power on/off
- Buttons: on/off, zero, mm/in, INC
- Data output
- Made of stainless steel

133-012-12 and 133-020-12



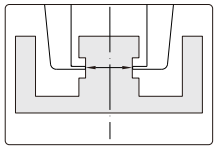

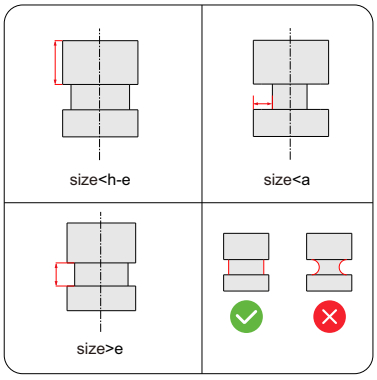

Code	Range	Accuracy	a	c	e	f	h	L
133-006-11	0-150mm/0-6"	±0.04mm	5	16	1	4	40	250
133-008-11	0-200mm/0-8"	±0.05mm	9	17	1.5	4	80	310
133-012-11	0-300mm/0-12"	±0.05mm	10	16	1.5	4	60	410
133-012-12	0-300mm/0-12"	±0.06mm	12	24	2	5	150	490
133-020-12	0-500mm/0-20"	±0.07mm	12	24	2	5.5	150	690

SERIES 143 OUTSIDE NECK VERNIER CALIPER

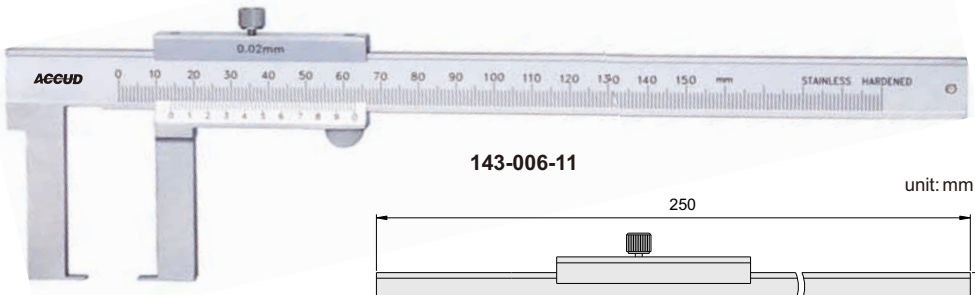

143-006-11

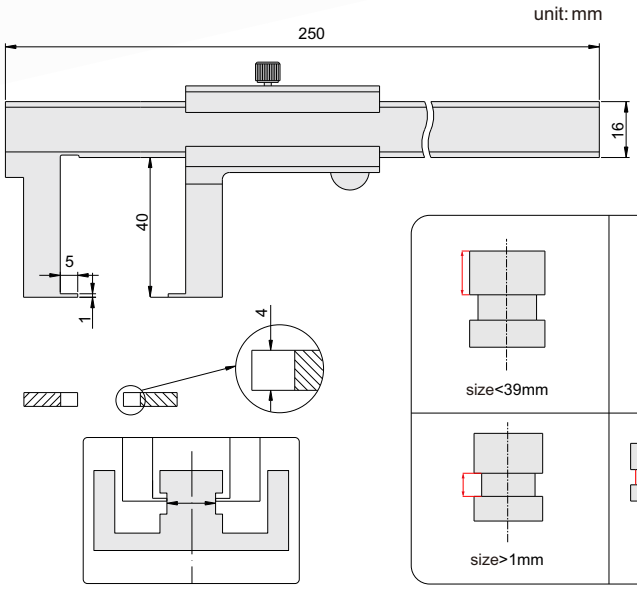

- Measure wall thickness and recesses
- Made of stainless steel
- Satin chrome plated reading surface

Graduation 0.02mm

Code	Range	Accuracy
143-006-11	0-150mm	±0.04mm

Graduation 0.05mm

Code	Range	Accuracy
143-006-13	0-150mm	±0.05mm

SERIES 134 DIGITAL OUTSIDE POINT CALIPER

Data output | CR2032

VIDEO

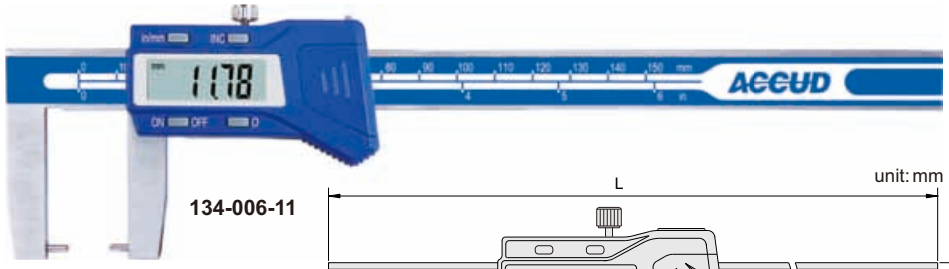

134-006-11

unit: mm

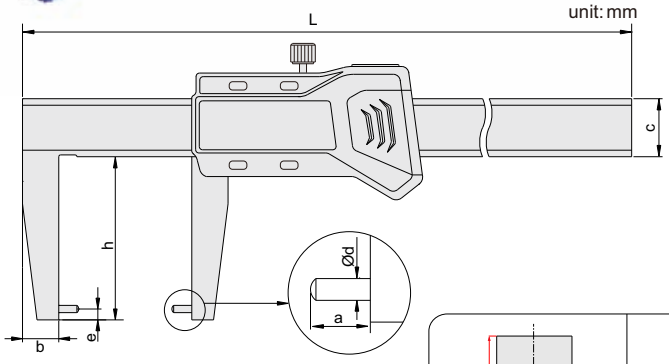

- Measure wall thickness of inside bores and recesses
- Resolution: 0.01mm/0.0005"
- Automatic power on/off
- Buttons: on/off, zero, mm/in, INC
- Data output
- Made of stainless steel

For range 300mm



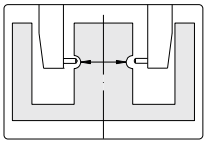

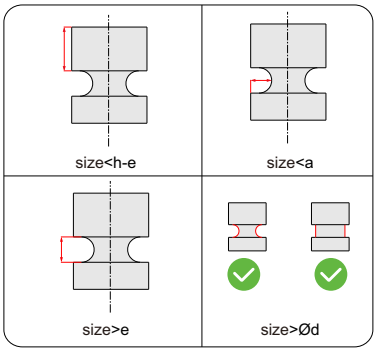

Code	Range	Accuracy	a	b	c	Ød	e	h	L
134-006-11	0-150mm/0-6"	±0.04mm	5	10	16	2	2	40	250
134-008-11	0-200mm/0-8"	±0.05mm	9	14	16	3	3	80	310
134-012-12	0-300mm/0-12"	±0.06mm	12	20	24	3	3	150	490

SERIES 144 OUTSIDE POINT VERNIER CALIPER

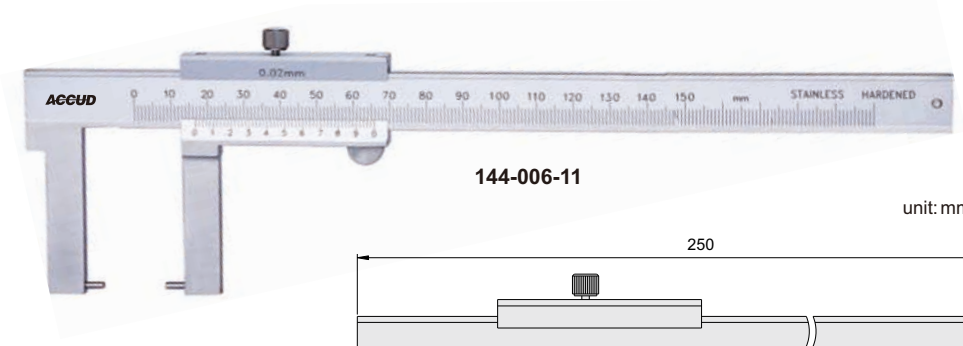

144-006-11

unit: mm

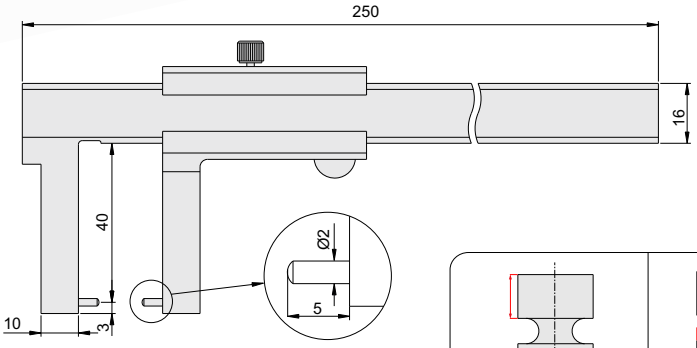

- Measure wall thickness of inside bores and recesses
- Made of stainless steel
- Satin chrome plated reading surface

Graduation 0.02mm

Code	Range	Accuracy
144-006-11	0-150mm	±0.04mm

Graduation 0.05mm

Code	Range	Accuracy
144-006-13	0-150mm	±0.05mm

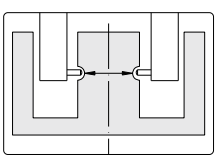

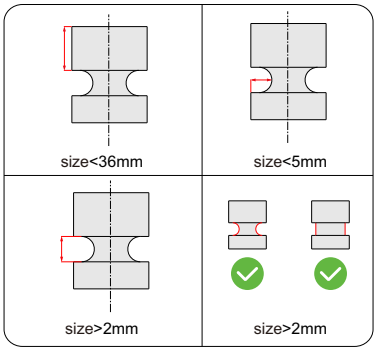

SERIES 135 DIGITAL INSIDE NECK CALIPER

Data output | CR2032

- Measure the grooves
- Resolution: 0.01mm/0.0005"
- Automatic power on/off
- Buttons: mm/in, SET, preset(P+,P-)
- Preset: 2b, don't need to add the width of the jaws on the reading
- Data output
- Made of stainless steel

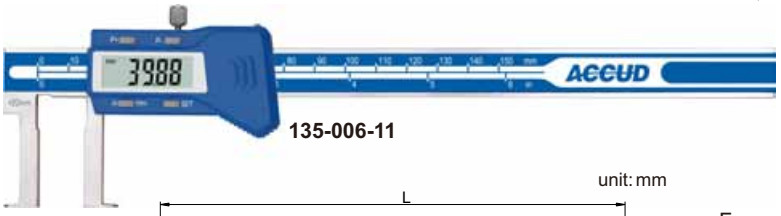

135-006-11

VIDEO

unit: mm

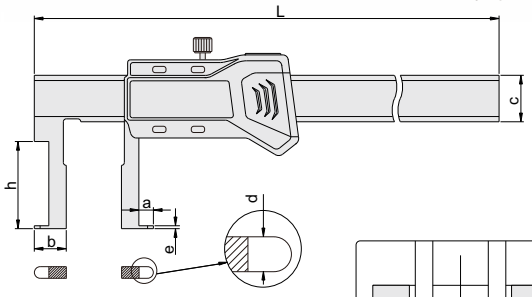

For range 500mm



Preset buttons

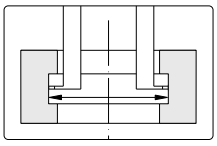



Code	Range	Accuracy	a	b	c	d	e	h	L
135-006-11	22-150mm	±0.04mm	5	11	16	4	1	30	250
135-008-11	25-200mm	±0.04mm	5	12.5	16	4	1	40	310
135-012-11	30-300mm	±0.05mm	5	15	17	4	1.5	50	410
135-020-11	80-500mm	±0.07mm	16	40	24	5.5	4	90	680
135-006-12	35-150mm	±0.06mm	6	17.5	16	4	1.5	60	250
135-008-12	40-200mm	±0.06mm	7	20	16	4	1.5	70	310
135-012-12	50-300mm	±0.07mm	8	25	16	4	1.5	80	410
135-020-12	80-500mm	±0.08mm	16	40	24	5.5	4	150	680

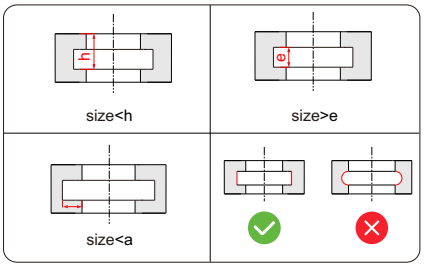

SERIES 145 INSIDE NECK VERNIER CALIPER

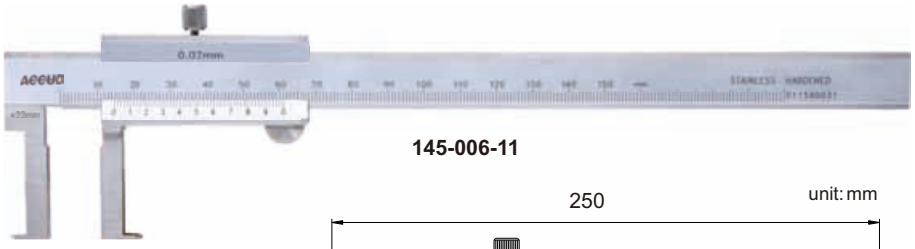

145-006-11

unit: mm

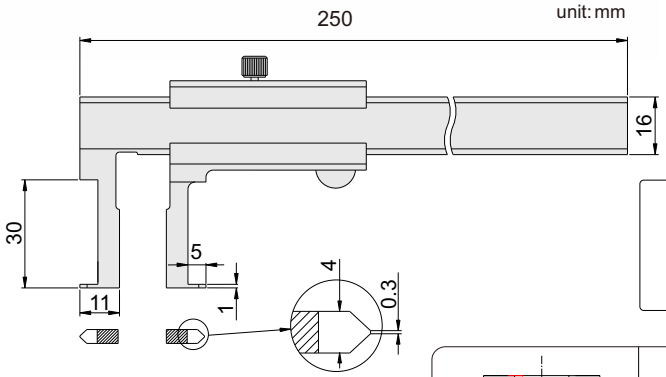

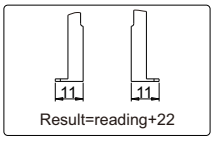

- Measure the grooves
- Made of stainless steel
- Satin chrome plated reading surface

Graduation 0.02mm

Code	Range	Accuracy
145-006-11	22-150mm	±0.04mm

Graduation 0.05mm

Code	Range	Accuracy
145-006-13	22-150mm	±0.05mm

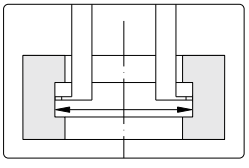

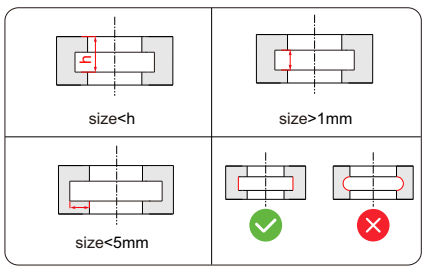

SERIES 136 DIGITAL INSIDE POINT CALIPER

Data output | CR2032



136-006-11

VIDEO

unit: mm

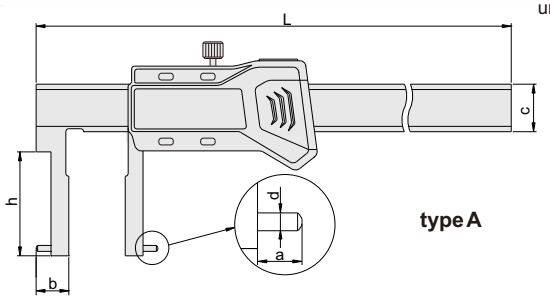

type A

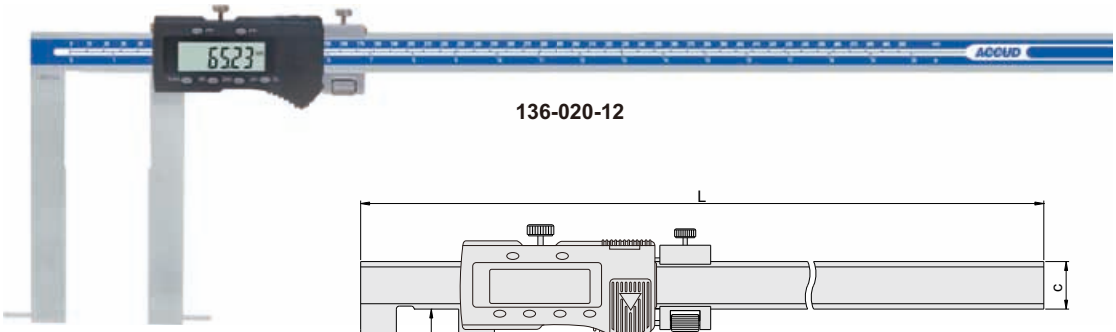

136-020-12

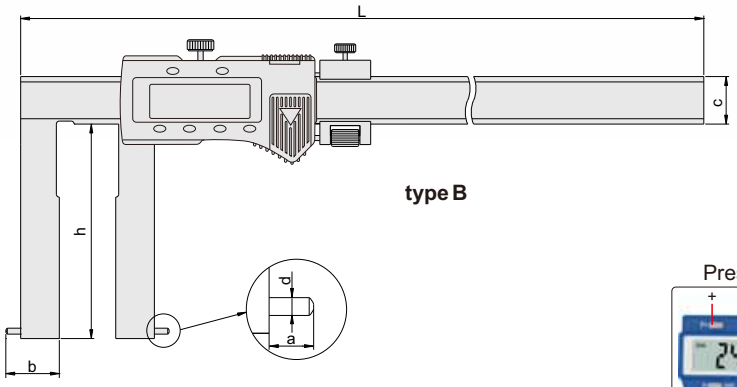

type B

Preset buttons



- Measure the grooves
- Resolution: 0.01mm/0.0005"
- Automatic power on/off
- Buttons: mm/in, SET, preset(P+,P-)
- Preset: 2b, don't need to add the width of the jaws on the reading
- Data output
- Made of stainless steel

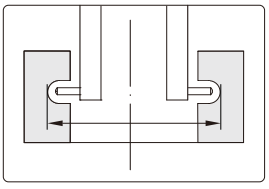

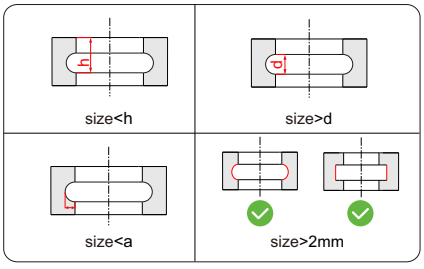

Code	Range	Accuracy	Type	a	b	c	d	h	L
136-006-11	24-150mm	±0.04mm	A	5	12	16	Ø2	30	250
136-008-11	25-200mm	±0.04mm	A	5	12.5	16	Ø2	40	310
136-012-11	50-300mm	±0.07mm	A	8	25	17	Ø3	80	410
136-020-11	80-500mm	±0.07mm	B	16	40	24	Ø3	90	680
136-006-12	35-150mm	±0.05mm	A	6	17.5	16	Ø2	60	250
136-008-12	40-200mm	±0.05mm	A	7	20	16	Ø2	70	310
136-012-12	30-300mm	±0.05mm	A	5	15	16	Ø3	50	410
136-020-12	80-500mm	±0.08mm	B	16	40	24	Ø3	150	680

SERIES 146 INSIDE POINT VERNIER CALIPER

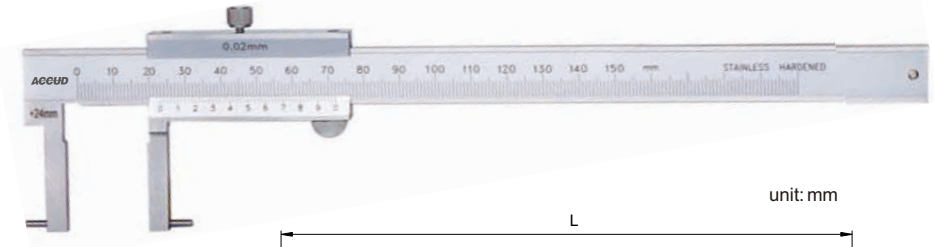

unit: mm

146-006-11

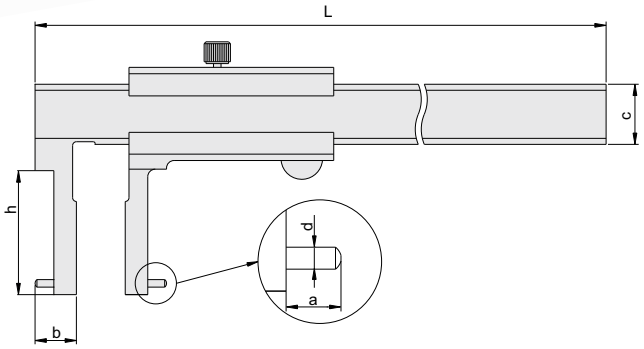

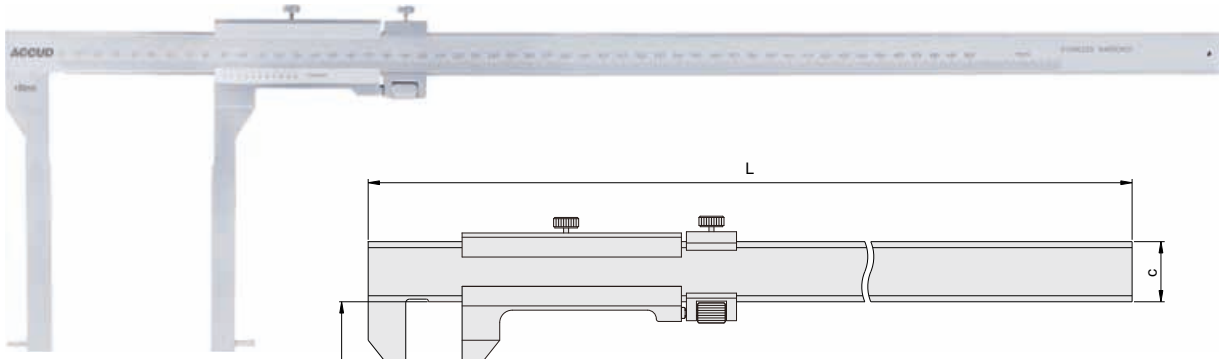

146-020-52

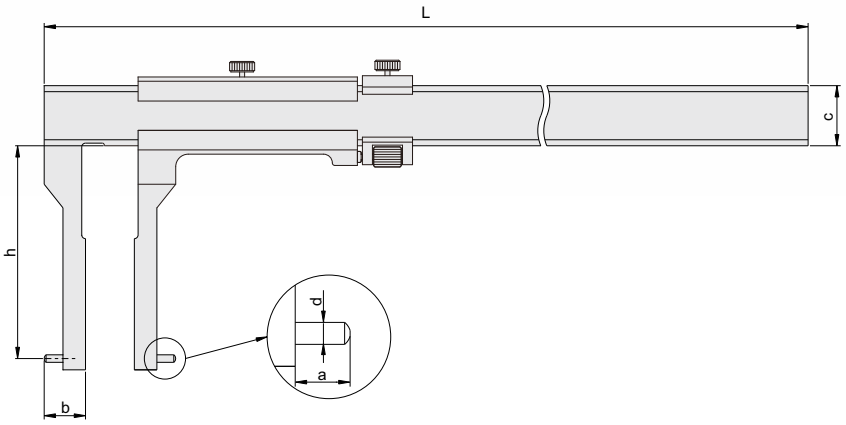

- Measure the grooves
- Made of stainless steel
- Satin chrome plated reading surface

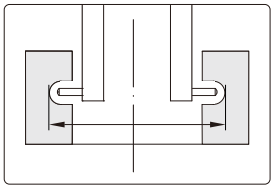

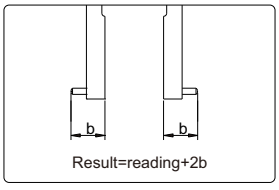

Graduation 0.02mm

Code	Range	Accuracy	a	b	c	d	h	L
146-006-11	24-150mm	±0.04mm	5	12	16	Ø2	30	250
146-012-11	50-300mm	±0.06mm	8	25	17	Ø3	80	410

Graduation 0.05mm

Code	Range	Accuracy	a	b	c	d	h	L
146-006-13	24-150mm	±0.05mm	5	12	16	Ø2	30	250
146-012-13	50-300mm	±0.08mm	8	25	17	Ø3	80	410
146-020-52	50-500mm	±0.08mm	11	25	24	Ø3	150	672

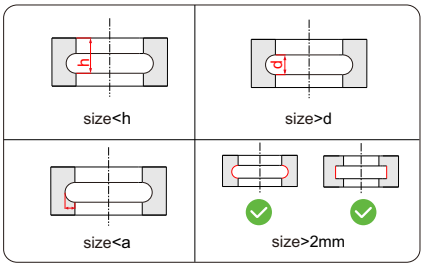

136 DIGITAL INSIDE POINT CALIPER

Data output | CR2032

VIDEO

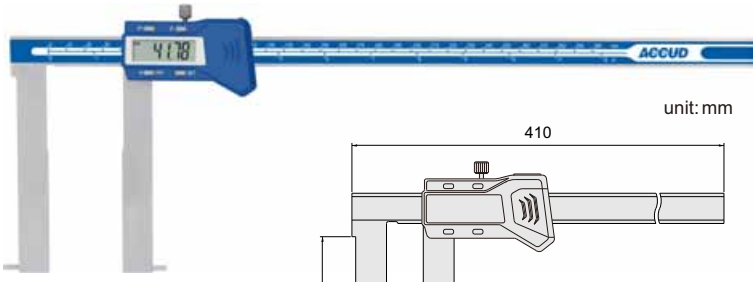

unit: mm

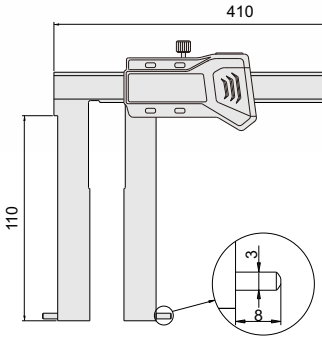

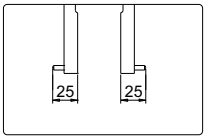

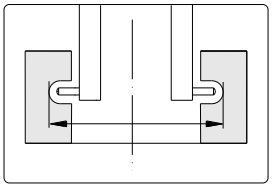

Preset buttons



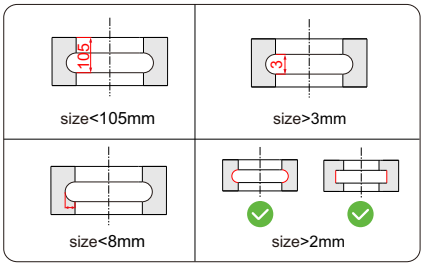

- Measure the grooves
- Resolution: 0.01mm/0.0005"
- Automatic power on/off
- Buttons: mm/in, SET, preset(P+,P-)
- Preset: 50mm, don't need to add the width of the jaws on the reading
- Data output (cable code: 100-03 or 100-04)
- Made of stainless steel

Code	Range	Accuracy
136-012-13S	50-300mm	±0.06mm

132 DIGITAL INSIDE GROOVE CALIPER

Data output | CR2032



unit: mm

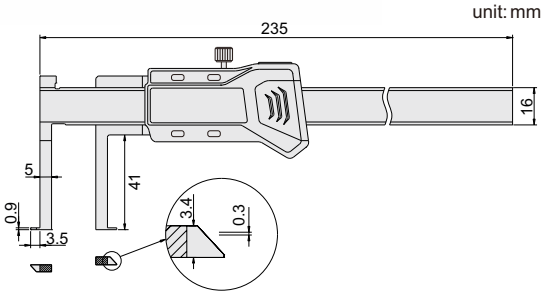

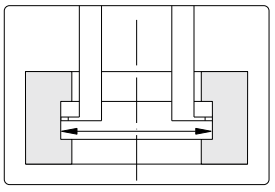

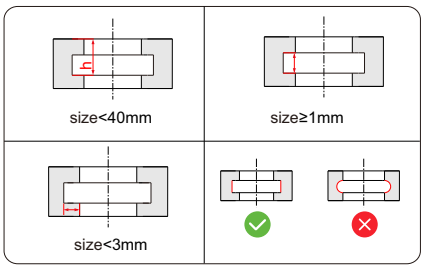

- Measure diameter of grooves inside small bores
- Resolution: 0.01mm/0.0005"
- Buttons: on/off, zero, mm/in, INC
- Automatic power on/off
- Data output(cable code: 100-03 or 100-04)
- Made of stainless steel

Code	Range	Accuracy
132-006-21	10-150mm/0.39-6"	±0.04mm

132 DIGITAL INSIDE GROOVE CALIPER

Data output | CR2032

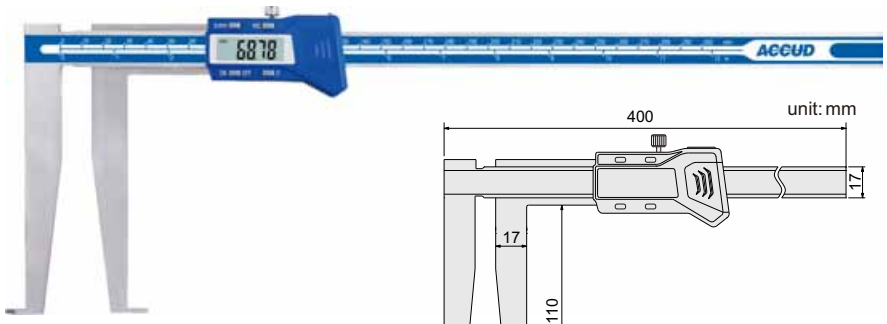

D	L
Ø25	<50mm
Ø26	<60mm
Ø27~300	<110mm

- Measure diameter of grooves inside bores
- Resolution: 0.01mm/0.0005"
- Automatic power on/off
- Buttons: on/off, zero, mm/in, INC
- Data output(cable code: 100-03 or 100-04)
- Made of stainless steel

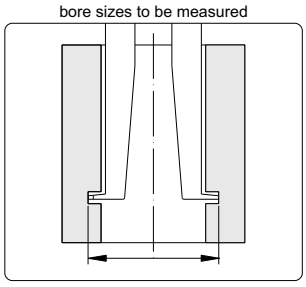

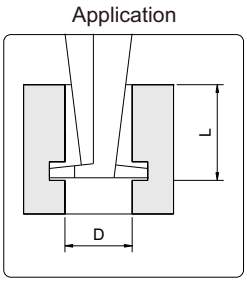

Code	Range	Accuracy
132-012-11	25-300mm	±0.05mm

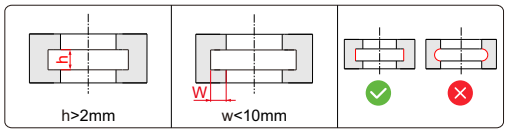

137 DIGITAL TUBE THICKNESS CALIPER

Data output | CR2032

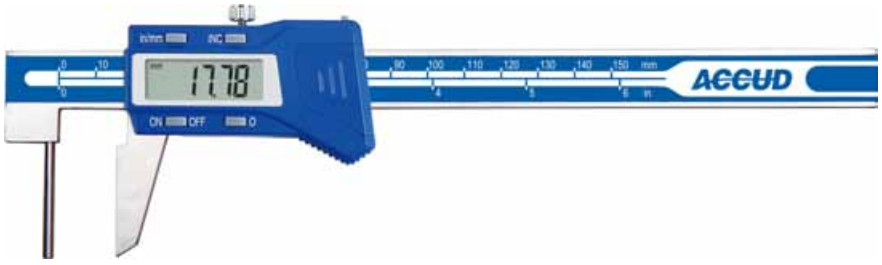

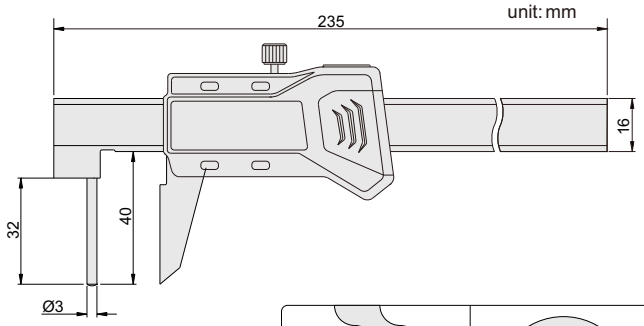

- Measure the wall thickness
- Resolution: 0.01mm/0.0005"
- Automatic power on/off
- Buttons: on/off, zero, mm/in, INC
- Data output(cable code:100-03 or 100-04)
- Made of stainless steel

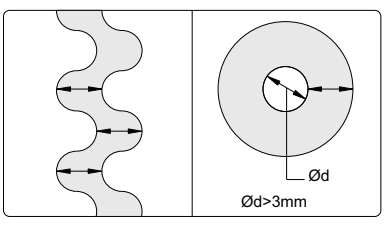

Code	Range	Accuracy
137-006-11	0-150mm/0-6"	±0.05mm

SERIES 139 DIGITAL INSIDE KNIFE-EDGE CALIPER

Data output | CR2032



139-006-11

- Measure the diameter of deep holes or grooves
- Resolution: 0.01mm/0.0005"
- Automatic power on/off
- Buttons: on/off, zero, mm/in, INC
- Data output(cable code: 100-03 or 100-04)
- Made of stainless steel

unit: mm

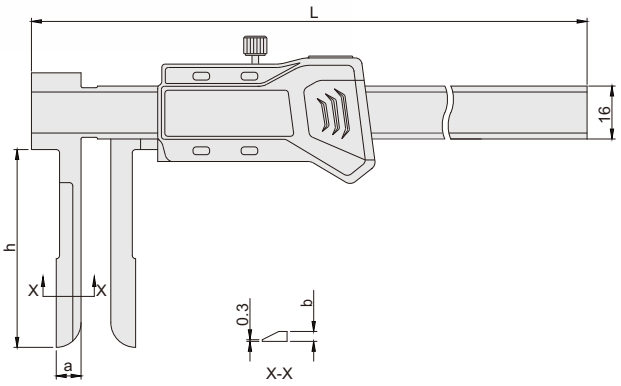

Code	Range	Accuracy	L	h	a	b
139-006-11	15-150mm	±0.05mm	250	60	12	3
139-008-11	20-200mm	±0.05mm	310	90	15	4
139-012-11	20-300mm	±0.06mm	410	90	16	4

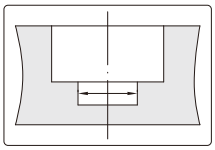

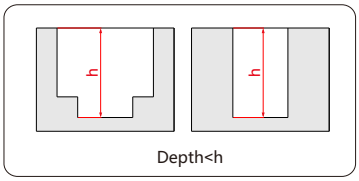

SERIES 159 DIGITAL INSIDE GROOVE CALIPER

Data output | CR2032

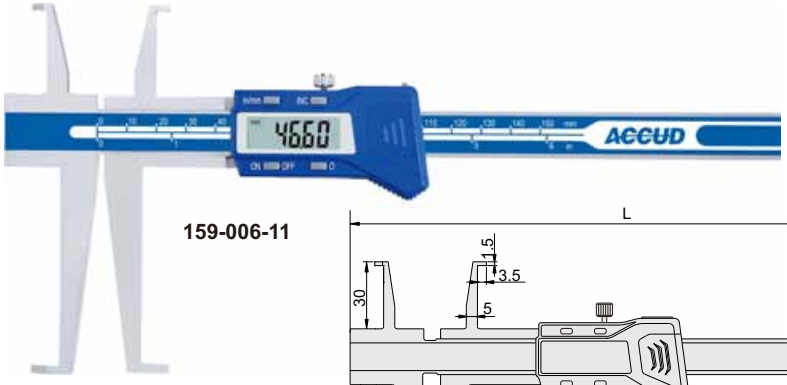

159-006-11

- Measure diameter of grooves inside bores
- Resolution: 0.01mm/0.0005"
- Buttons: on/off, zero, mm/in, INC
- Automatic power on/off
- Data output(cable code: 100-03 or 100-04)
- Made of stainless steel

unit: mm

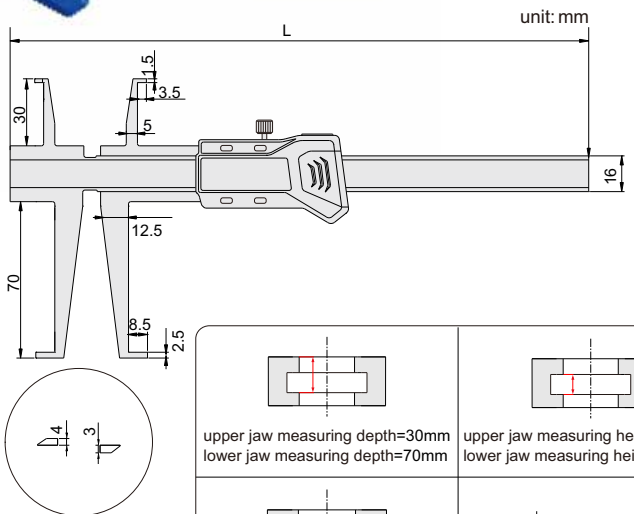

Code	Range of upper jaw	Range of lower jaw	Accuracy	L
159-006-11	9-150mm	15-150mm	±0.04mm	260
159-008-11	9-200mm	15-200mm	±0.06mm	310

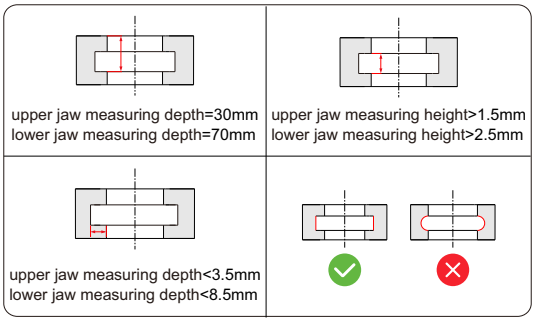

SERIES 104 INSIDE GROOVE DIAL CALIPER

Shock proof

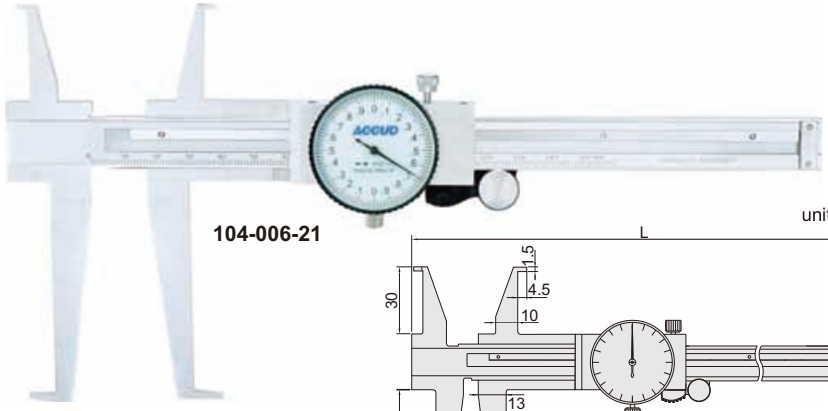

104-006-21

unit: mm

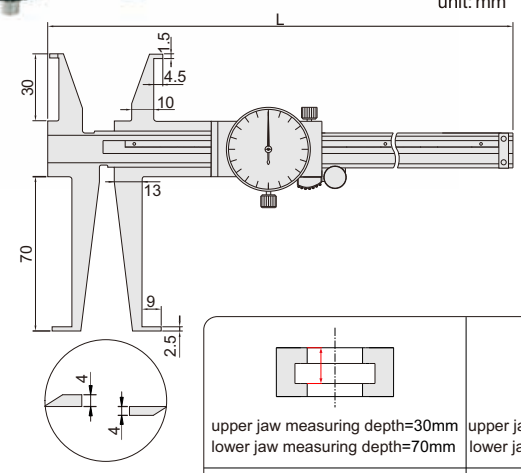

- Measure diameter of grooves inside bores
- Shockproof dial indicator
- Dial indicator graduation: 0.02mm
- Made of stainless steel

Code	Range of upper jaw	Range of lower jaw	Accuracy	L
104-006-21	11-150mm	18-150mm	±0.03mm	250
104-008-21	11-200mm	18-200mm	±0.03mm	290
104-012-21	11-300mm	18-300mm	±0.04mm	410

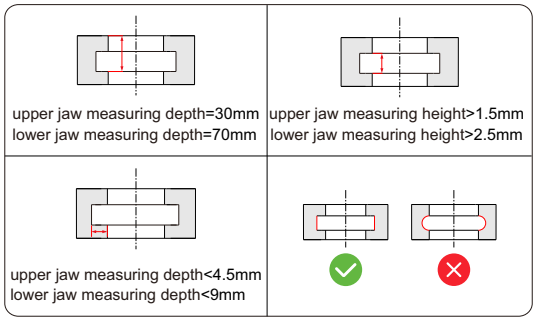

SERIES 109 INSIDE GROOVE CALIPER

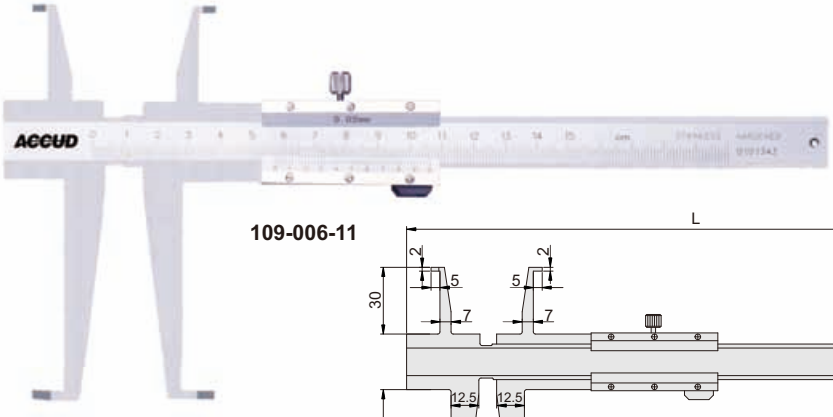

109-006-11

unit: mm

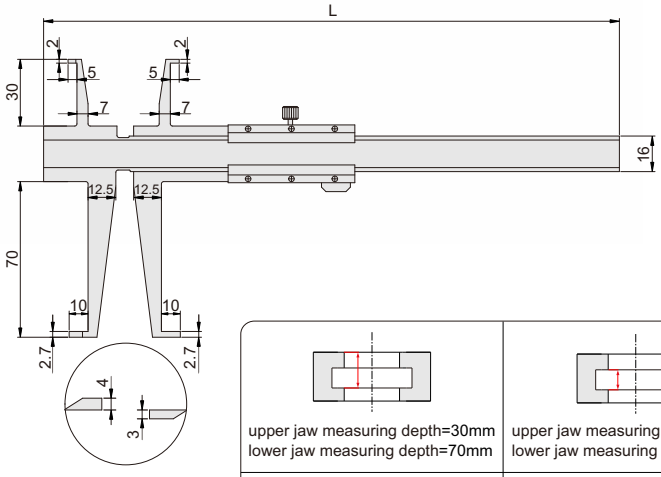

- Measure diameter of grooves inside bores
- Graduation: 0.02mm
- Made of stainless steel
- Satin chrome plated reading surface

Code	Range of upper jaw	Range of lower jaw	Accuracy	L
109-006-11	9-150mm	16-150mm	±0.04mm	260
109-008-11	9-200mm	16-200mm	±0.06mm	310
109-012-11	9-300mm	16-300mm	±0.06mm	415

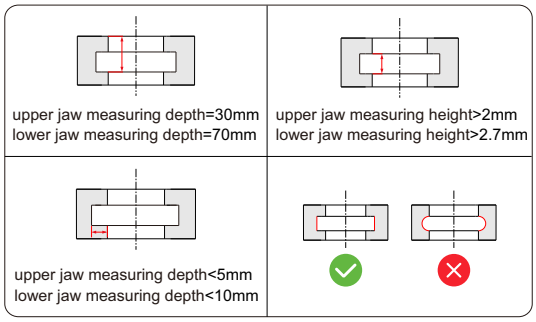

870 IP67 WATERPROOF DIGITAL CALIPER WITH INTERCHANGEABLE POINTS

CR2032 IP67 ABS



- Supplied with 4 pairs of points and one zero setting block for external measurement
- IP67 protection level
- Absolute measuring system
- Resolution: 0.01mm/0.0005"
- Automatic power off
- Buttons: zero, mm/inch, data preset
- Made of stainless steel

unit: mm

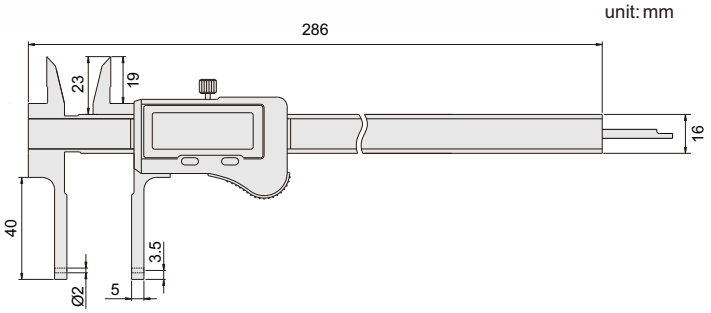

Zero setting block (included)

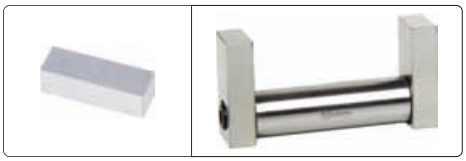

Cylindrical spherical points

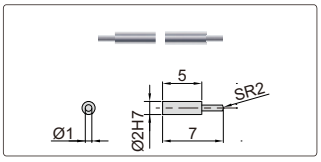

Short spherical/flat points

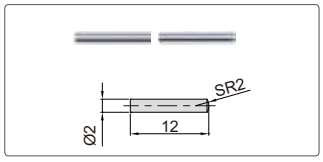

Short spherical blade points

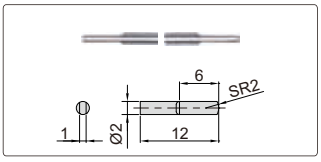

Long spherical/flat points

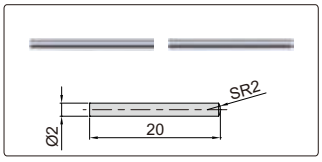

Install points

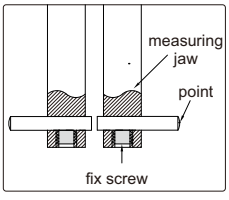

Measure internal and external grooves

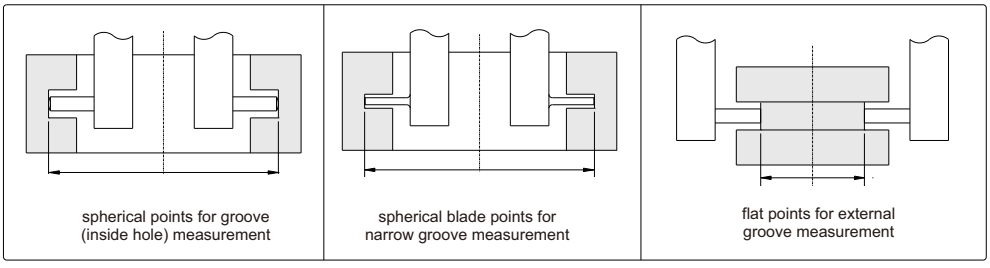

Code	Point	Range	Accuracy	Application
870-008-11	cylindrical spherical points	14-214mm/0.6-8.6"(internal) 0-196mm/0-7.7"(external)	±0.04mm	spherical points for grooves/inside hole, (small hole)
	short spherical/ flat points	24-224mm/1-8.8"(internal) 0-186mm/0-7.3"(external)	±0.04mm	spherical points for grooves/inside hole, (small hole) flat points for external grooves
	long spherical/ flat points	40-240mm/1.6-9.6"(internal) 0-170mm/0-6.7"(external)	±0.04mm	spherical points for grooves/inside hole, (large hole) flat points for external grooves
	short spherical blade points	24-224mm/1-8.8"(internal) 0-186mm/0-7.3"(external)	±0.04mm	for narrow grooves (small hole)

DIGITAL CALIPER WITH INTERCHANGEABLE POINTS

Data output

CR2032

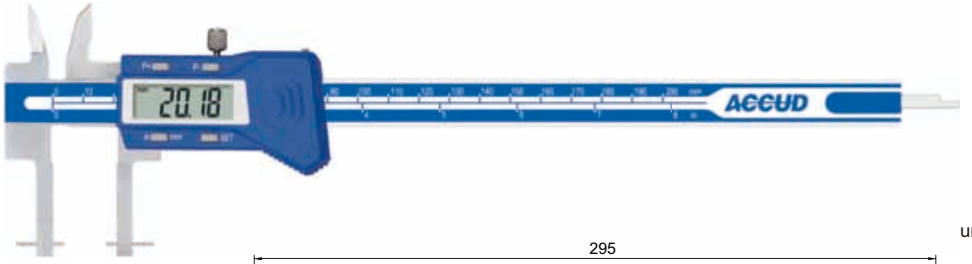

unit: mm

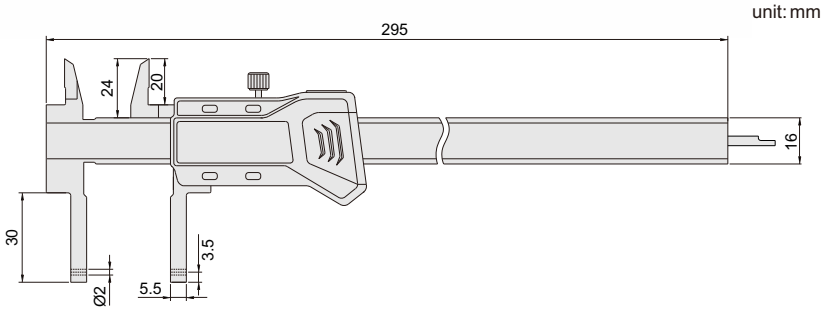

- Supplied with 3 pairs of points and one zero setting block for external measurement
- Resolution: 0.01mm/0.0005"
- Buttons: mm/in, SET, preset(P+,P-)
- Automatic power on/off
- Data output (cable code: 100-03 or 100-04)
- Made of stainless steel

Preset buttons



Install points

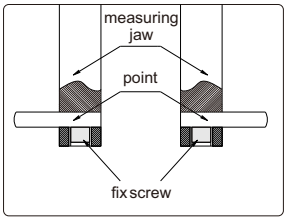

Short spherical points **(included)**

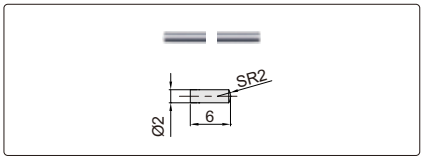

Long spherical/flat points **(included)**

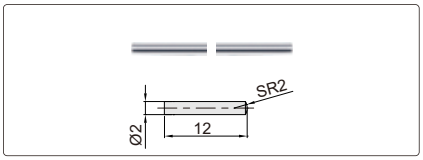

Short spherical blade points **(included)**

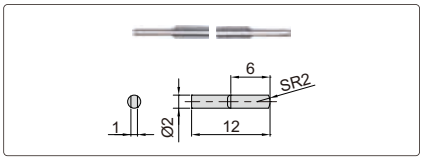

Zero setting block for external measurement **(included)**



Measure internal and external grooves

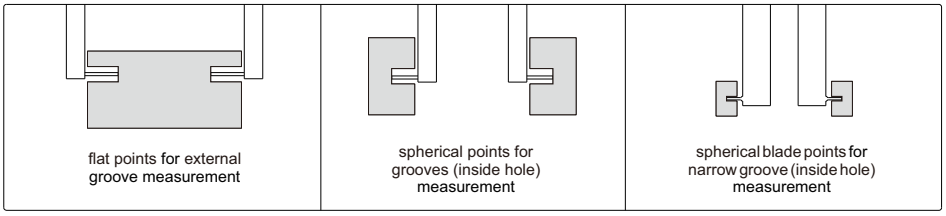

Code	Point	Range	Accuracy	Application
149-008-11	short spherical points	12-212mm/0.5-8.5"(internal)	±0.03mm	for grooves/inside small hole
	long spherical/flat points	24-224mm/1-8.8"(internal) 0-187mm/0-7.5"(external)	±0.03mm	spherical points for grooves/inside hole, flat points for external grooves
	spherical blade points	24-224mm/1-8.8"(internal) 0-187mm/0-7.5"(external)	±0.03mm	for narrow grooves/inside hole

149 DIGITAL CALIPER WITH INTERCHANGEABLE POINTS

Data output | CR2032

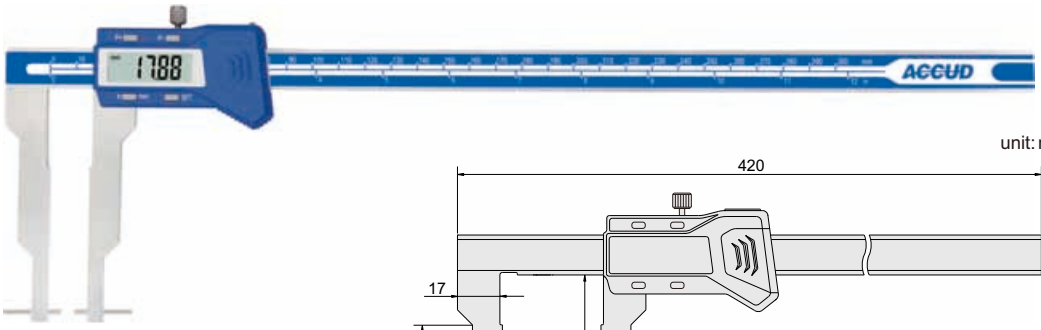

unit: mm

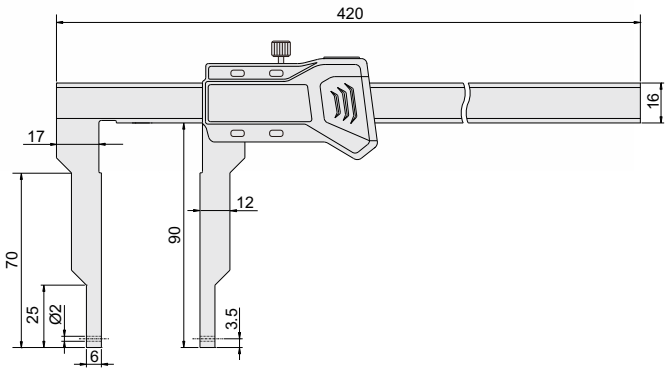

- Supplied with 4 pairs of points and one zero setting block for external measurement
- Resolution: 0.01mm/0.0005"
- Buttons: mm/in, SET, preset(P+,P-)
- Automatic power on/off
- Data output(cable code: 100-03 or 100-04)
- Made of stainless steel

Preset buttons



Install points

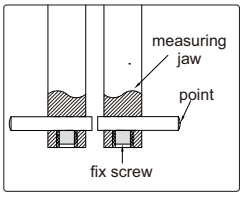

Short spherical/flat points

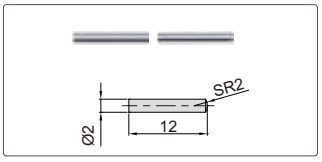

Short spherical blade points

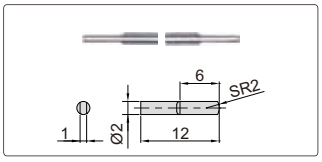

Long spherical/flat points

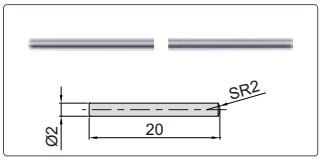

Long spherical blade points

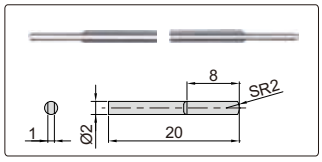

Zero setting block for external measurement (included)



Measure internal and external grooves

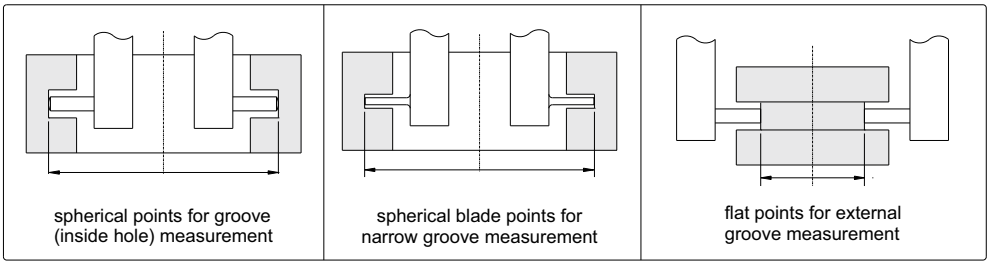

Code	Point	Range	Accuracy	Application
149-012-11	short spherical/ flat points	24-324mm/1-12.7"(internal) 0-288mm/0-11.3"(external)	±0.04mm	spherical points for grooves/inside hole, (small hole) flat points for external grooves
	long spherical/ flat points	40-340mm/1.5-13.3"(internal) 0-272mm/0-10.7"(external)	±0.04mm	spherical points for grooves/inside hole, (large hole) flat points for external grooves
	short spherical blade points	24-324mm/1-12.7"(internal) 0-288mm/0-11.3"(external)	±0.04mm	for narrow grooves (small hole)
	long spherical blade points	40-340mm/1.5-13.3"(internal) 0-272mm/0-10.7"(external)	±0.04mm	for narrow grooves (large hole)

SERIES 149 DIGITAL CALIPER WITH INTERCHANGEABLE POINTS

Data output

CR2032

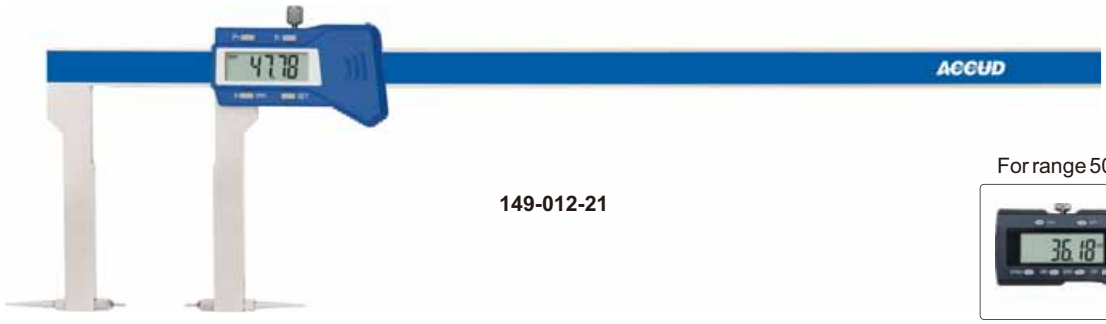

149-012-21

For range 500mm

- Supplied with 4 pairs of points
  (Cylindrical needle point: 270-006-16 2pc,
  Cylindrical needle point: 270-006-04 2pc,
  Conical needle point: 270-006-21 2pc,
  Conical needle point: 270-006-23 2pc)
- Zero setting block for external measurement
- Resolution: 0.01mm/0.0005"
- Buttons: mm/in, SET, preset(P+,P-)
- Automatic power on/off
- Data output
- Made of stainless steel

unit: mm

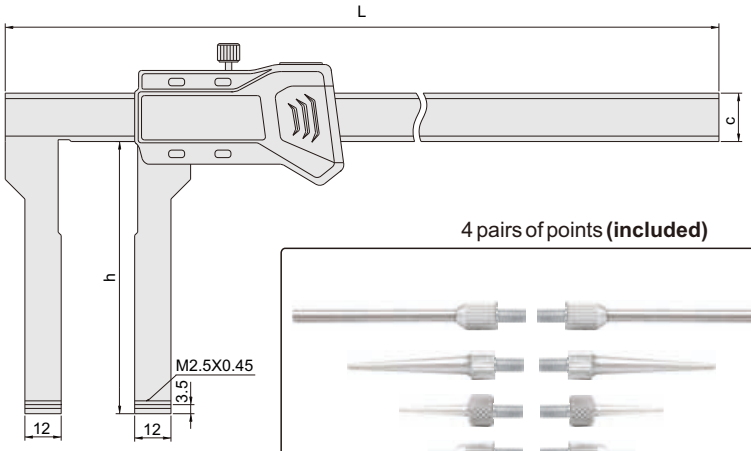

4 pairs of points **(included)**

Preset buttons



Points **(optional)**



Series 270

Zero setting block for external measurement (included)

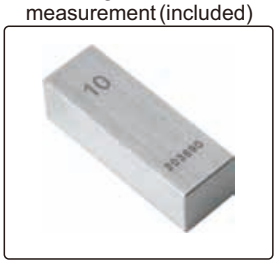

Measure internal and external grooves

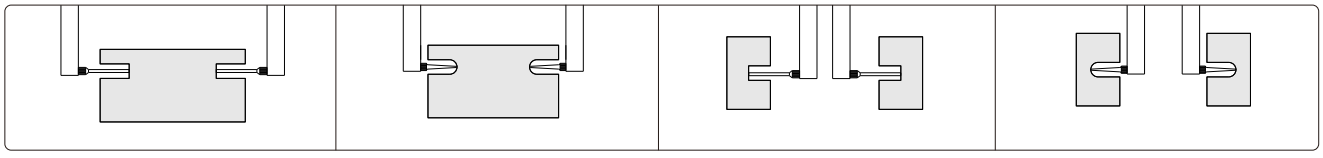

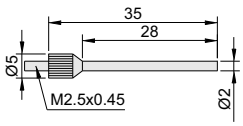

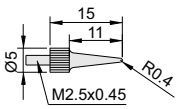

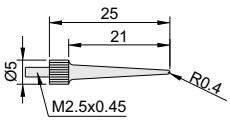

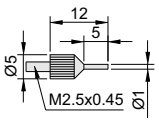

Code	Range	Accuracy	c	h	L
149-012-21	0-300mm/0-12"	±0.06mm	16	90	420
149-020-21	0-500mm/0-20"	±0.08mm	24	100	740

SERIES 151 DIGITAL OFFSET CENTERLINE CALIPER

Data output

CR2032

VIDEO

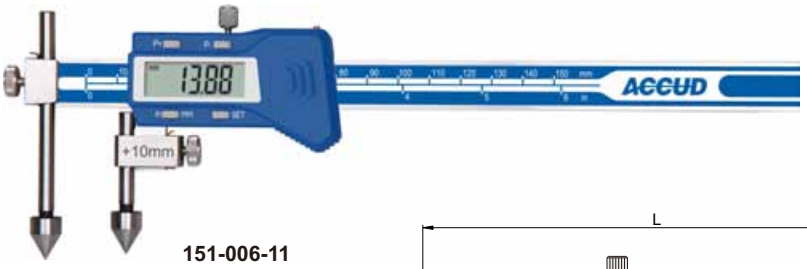

151-006-11

unit: mm

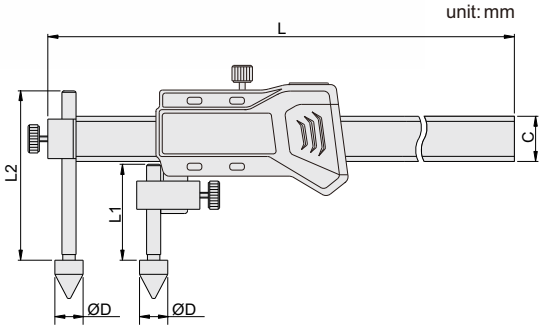

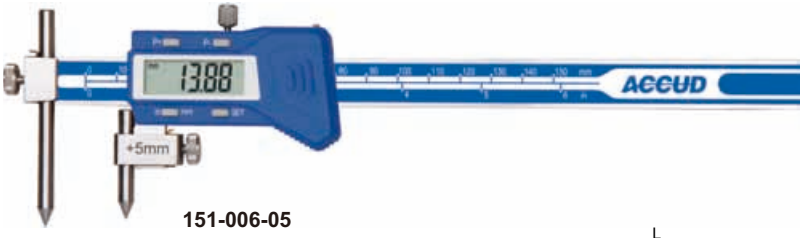

151-006-05

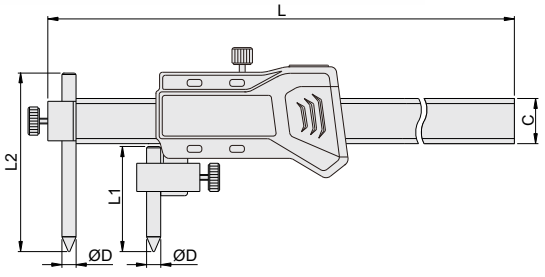

- Measure the hole center-to-center distance in same plane, or between offset planes
- Resolution: 0.01mm/0.0005"
- Automatic power on/off
- Buttons: mm/in, SET, preset(P+,P-)
- Data output
- Made of stainless steel

For range 500mm or above



Preset buttons



Code	Range	Accuracy	c	ØD	L1	L2	L
151-006-11	10-150mm/0.4-6"	±0.05mm	16	10	32	65	236
151-008-11	10-200mm/0.4-8"	±0.07mm	16	10	32	65	306
151-012-11	10-300mm/0.4-12"	±0.09mm	16	10	32	65	396
151-020-11	20-500mm/0.8-20"	±0.09mm	24	20	48	88	686
151-040-11	30-1000mm/1.2-40"	±0.12mm	31	30	42	88	1242

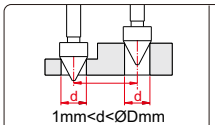

1mm<d<ØDmm
preset: ØD, result=reading



Ød1=Ød2 or Ød1≠Ød2
both can be measured

Code	Range	Accuracy	c	ØD	L1	L2	L
151-006-05	5-150mm/0.2-6"	±0.05mm	16	5	34	60	236
151-008-05	5-200mm/0.2-8"	±0.07mm	16	5	34	60	306
151-012-05	5-300mm/0.2-12"	±0.09mm	16	5	34	60	396

SERIES 161 OFFSET CENTERLINE VERNIER CALIPER

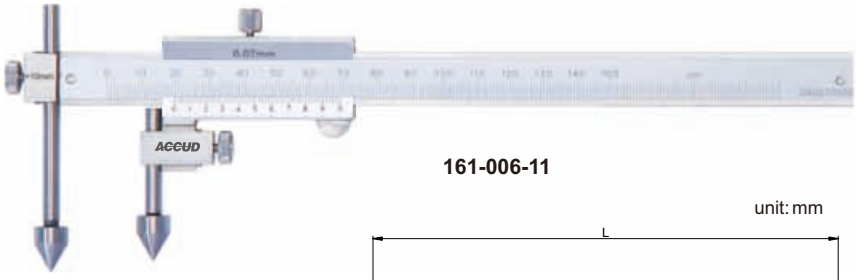

161-006-11

unit: mm

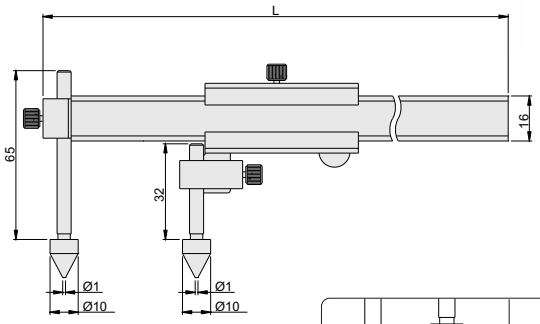

Graduation 0.02mm

Code	Range	Accuracy	L
161-006-11	10-150mm	±0.05mm	236
161-008-11	10-200mm	±0.07mm	306
161-012-11	10-300mm	±0.09mm	396

Graduation 0.05mm

Code	Range	Accuracy	L
161-006-13	10-150mm	±0.05mm	236
161-008-13	10-200mm	±0.07mm	306
161-012-13	10-300mm	±0.09mm	396

- Measure the hole center-to-center distance in same plane, or between offset planes
- Made of stainless steel
- Satin chrome plated reading surface

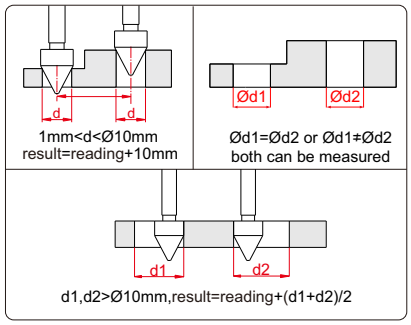

SERIES 141 DIGITAL BACK-JAW CENTERLINE CALIPER

Data output

CR2032

VIDEO



141-008-11

unit: mm

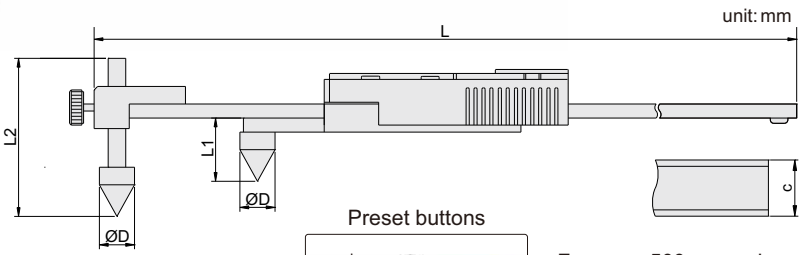

- Measure hole center distance in the same or offset planes
- Resolution: 0.01mm/0.0005"
- Buttons: mm/in, SET, preset(P+,P-)
- Data output
- Automatic power on/off
- Made of stainless steel

Preset buttons



For range 500mm or above

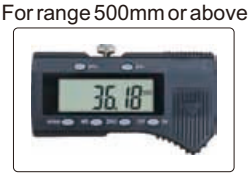

Code	Range	Accuracy	ØD	c	L1	L2	L
141-008-11	10-200mm/0.4-8"	±0.1mm	10	16	18	45	310
141-012-11	10-300mm/0.4-12"	±0.1mm	10	16	18	45	410
141-020-11	20-500mm/0.8-20"	±0.1mm	20	24	26	70	692
141-040-11	30-1000mm/1.2-40"	±0.12mm	30	31	39	70	1242
141-060-11	30-1500mm/1.2-60"	±0.15mm	30	31	39	70	1745

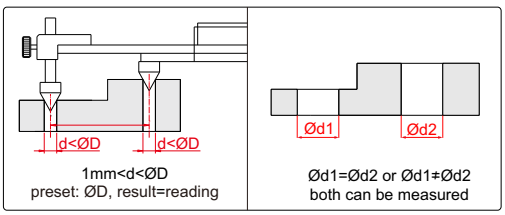

SERIES 147 BACK-JAW DIGITAL EDGE TO CENTER CALIPER

Data output | CR2032

VIDEO



147-008-11

unit: mm

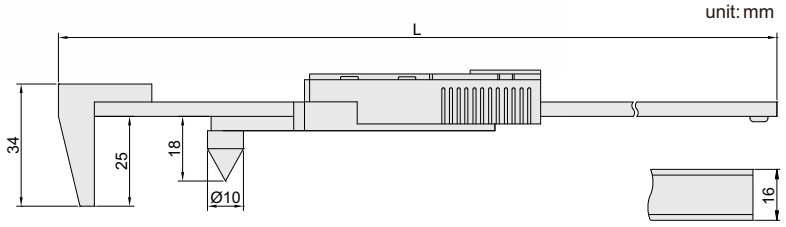

- Measure edge to hole center distance
- Resolution: 0.01mm/0.0005"
- Buttons: mm/in, SET, preset(P+,P-)
- Data output(cable code: 100-03 or 100-04)
- Automatic power on/off
- Made of stainless steel

Preset buttons



Measure edge to hole center distance

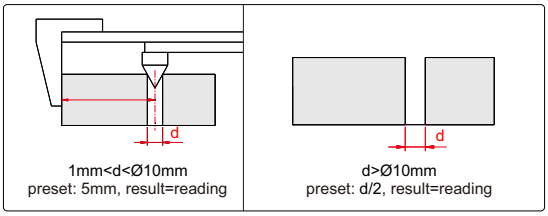

Code	Range	Accuracy	L
147-008-11	5-200mm/0.2-8"	±0.1mm	310
147-012-11	5-300mm/0.2-12"	±0.1mm	410

148 DIGITAL CENTERLINE/EDGE TO CENTER CALIPER

Data output | CR2032

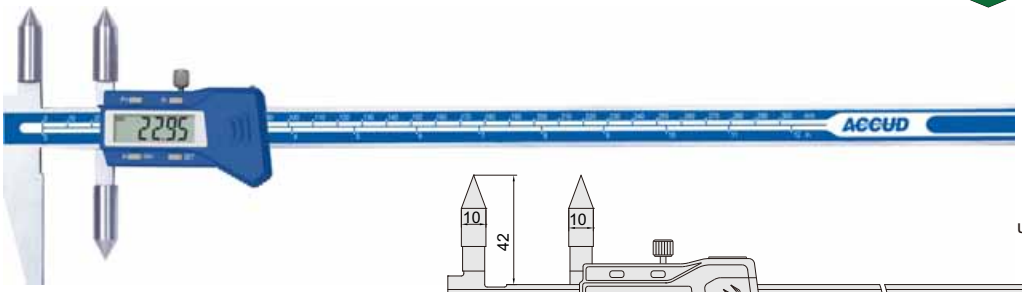

unit: mm

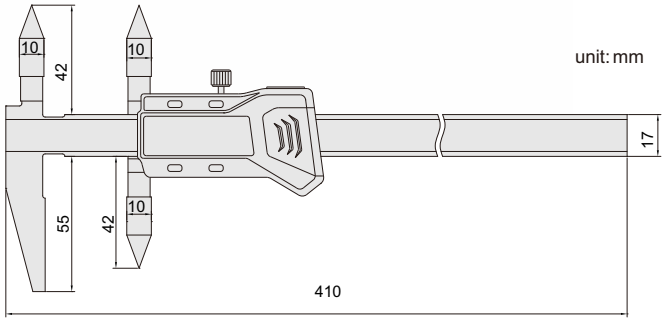

- Measure hole center distance or edge to hole center distance
- Resolution: 0.01mm/0.0005"
- Buttons: mm/in, SET, preset(P+,P-)
- Data output(cable code: 100-03 or 100-04)
- Automatic power on/off
- Made of stainless steel

Preset buttons



Measure edge to hole center distance

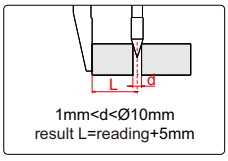

Measure hole center distance

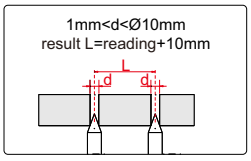

Code	Range of upper jaw (center to center)	Range of lower jaw (edge to center)	Accuracy
148-012-11	10-300mm/0.4-12"	5-300mm/0.2-12"	±0.08mm

SERIES 138 DIGITAL POINT CALIPER

Data output | CR2032

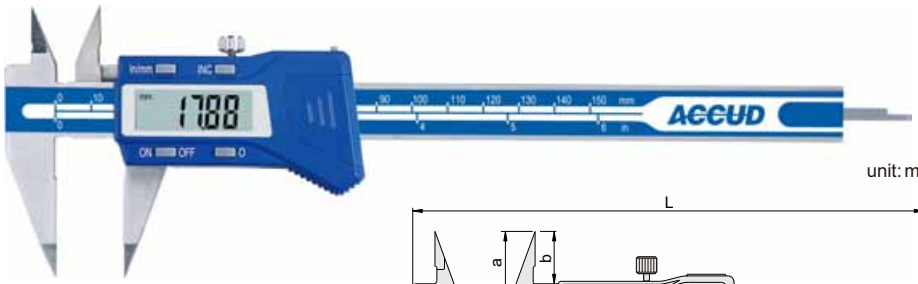

138-006-11

unit: mm

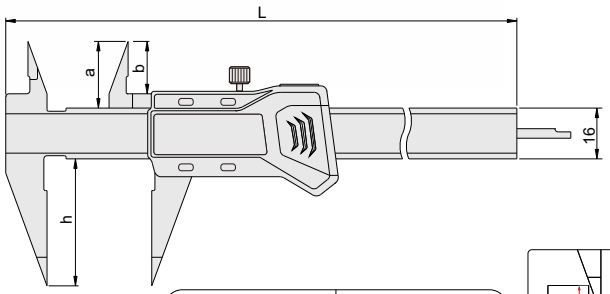

- Measure small holes or grooves
- Resolution: 0.01mm/0.0005"
- Automatic power on/off
- Buttons: on/off, zero, mm/in, INC
- Data output(cable code:100-03 or 100-04)
- Made of stainless steel

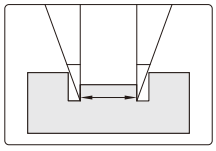

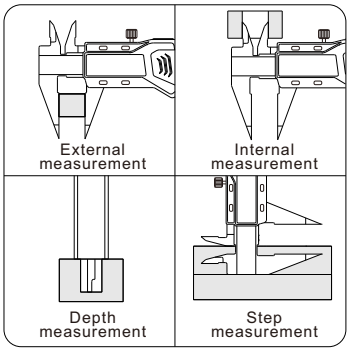

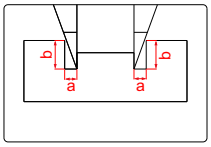

(mm)

a	b
1	2.5
2	5
3	7.5
4	10
5	12.5
6	15

Code	Range	Accuracy	a	b	h	L
138-006-11	0-150mm/0-6"	±0.03mm	21	16	40	236
138-008-11	0-200mm/0-8"	±0.03mm	24	19	50	286
138-012-11	0-300mm/0-12"	±0.03mm	25	21	60	390

168 DIGITAL SMALL POINT CALIPER

Data output | CR2032

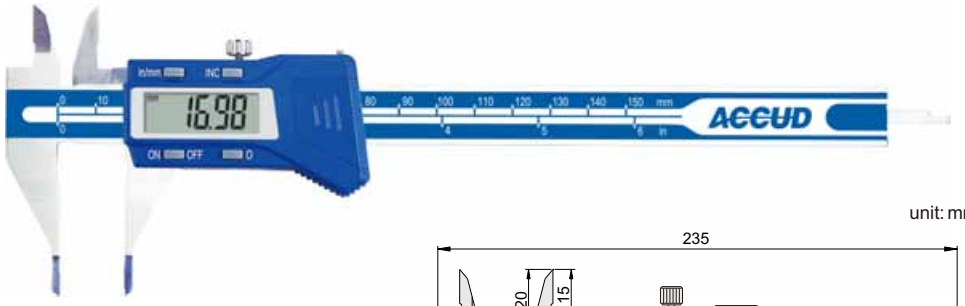

unit: mm

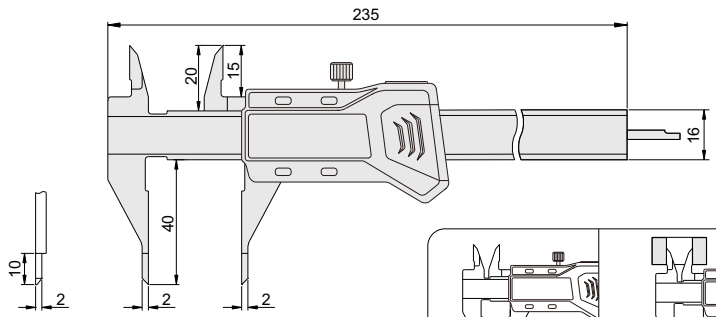

- Small point jaws fits into small grooves and recesses
- Resolution: 0.01mm/0.0005"
- Buttons: on/off, zero, mm/in, INC
- Automatic power on/off
- Data output(cable code:100-03 or 100-04)
- Made of stainless steel

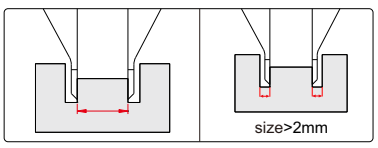

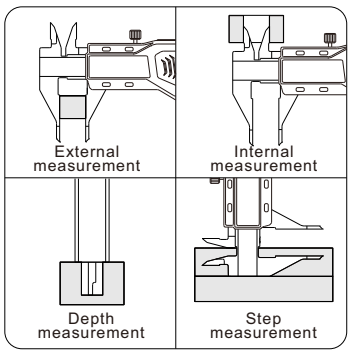

Code	Range	Accuracy
168-006-11	0-150mm/0-6"	±0.03mm

SERIES 115 DIGITAL CALIPER

Certificate | Zigbee | Data output | CR2032

- Ceramic tipped jaws for outside measurements, good wear- resistance, non-magnetic, non-conductive
- Resolution: 0.01mm/0.0005"
- Buttons: on/off, zero, mm/in, INC
- Automatic power on/off
- Made of stainless steel

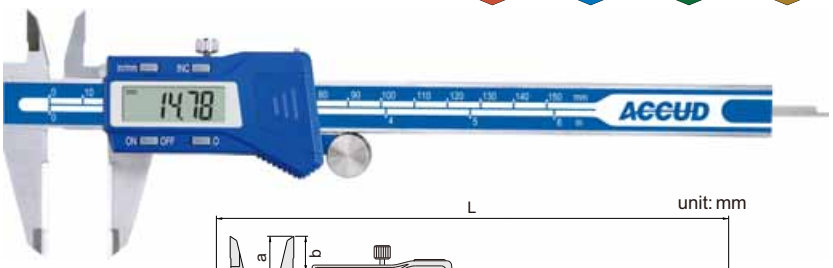

115-006-11

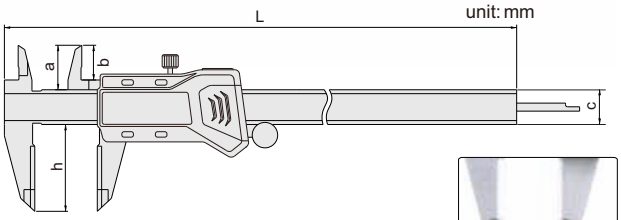

Data output (cable code:100-03 or 100-04)

Code	Range	Accuracy	a	b	c	h	L
115-006-11	0-150mm/0-6"	±0.03mm	21	16.5	16	40	236
115-008-11	0-200mm/0-8"	±0.03mm	24	19	16	50	286
115-012-11	0-300mm/0-12"	±0.03mm	26	20.5	16	60	390

Built-in wireless (receiver code 800-01 or 800-02)

Code	Range	Accuracy	a	b	c	h	L
115-006-11WL	0-150mm/0-6"	±0.03mm	21	16.5	16	40	236
115-008-11WL	0-200mm/0-8"	±0.03mm	24	19	16	50	286
115-012-11WL	0-300mm/0-12"	±0.03mm	26	20.5	16	60	390

With manufacturer inspection certificate

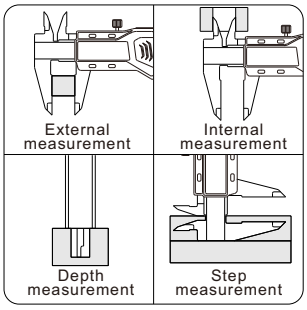

SERIES 153 DIGITAL BLADE CALIPER

Data output | CR2032

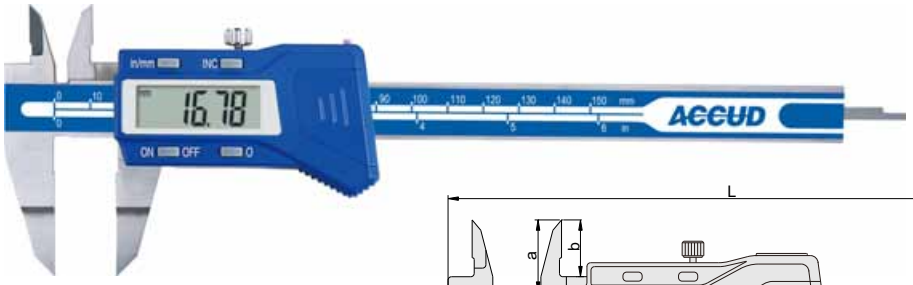

153-006-11

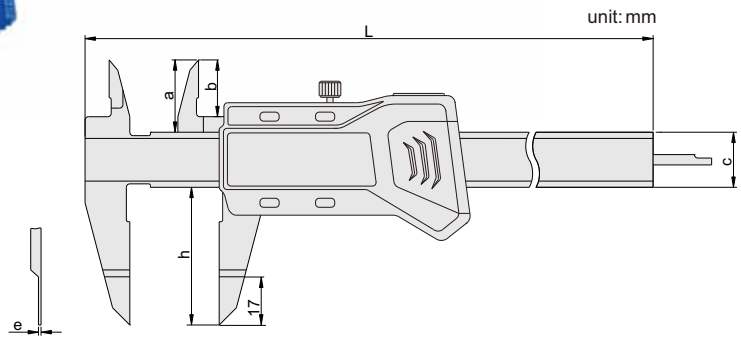

- Measure small grooves
- Resolution: 0.01mm/0.0005"
- Automatic power on/off
- Buttons: on/off, zero, mm/in, INC
- Data output(cable code: 100-03 or 100-04)
- Made of stainless steel

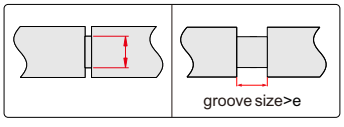

Code	Range	Accuracy	a	b	c	h	e	L
153-006-11	0-150mm/0-6"	±0.03mm	21	16	16	40	0.75	235
153-008-11	0-200mm/0-8"	±0.03mm	24	19	16	50	0.75	297
153-012-11	0-300mm/0-12"	±0.04mm	26	20.5	16	60	1.00	390

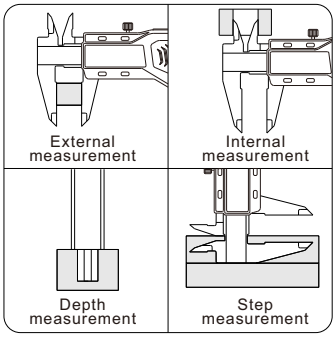

SERIES 116 DIGITAL CALIPER WITH CARBIDE TIPPED JAWS

Certificate | Data output | CR2032



116-006-11

unit: mm

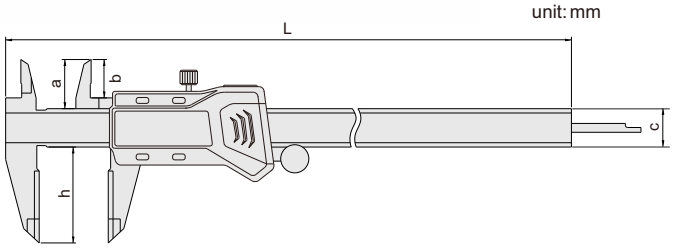

- Carbide tipped jaws for inside and outside measurements, good wear-resistance
- Resolution: 0.01mm/0.0005"
- Buttons: on/off, zero, mm/in, INC
- Data output(cable code:100-03 or 100-04)
- Automatic power on/off
- Made of stainless steel

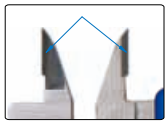

Carbide tipped jaws

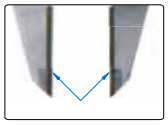

Carbide tipped jaws

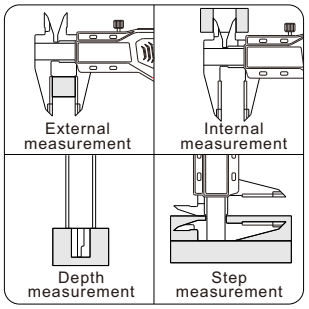

Code	Range	Accuracy	a	b	c	h	L
116-006-11	0-150mm/0-6"	±0.03mm	21	16	16	40	236
116-008-11	0-200mm/0-8"	±0.03mm	24	19	16	50	286
116-012-11	0-300mm/0-12"	±0.03mm	25	20.5	16	60	390

With manufacturer inspection certificate

SERIES 140 VERNIER CALIPER WITH CARBIDE TIPPED JAWS

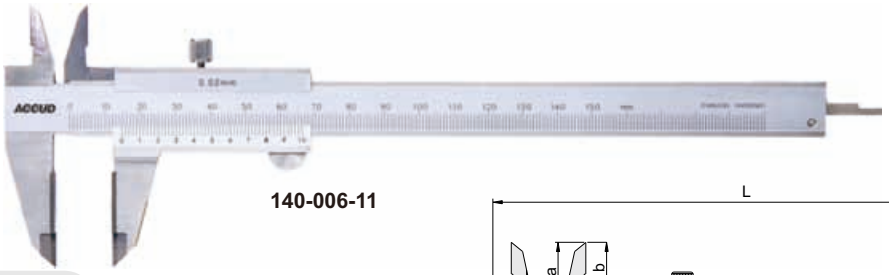

140-006-11

unit: mm

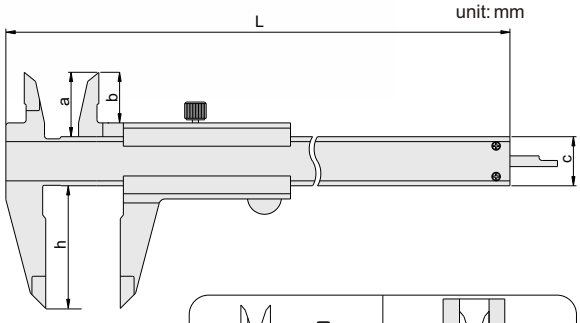

- Carbide tipped jaws
- Meet DIN862
- Satin chrome reading surface
- Made of stainless steel



Carbide tipped jaws

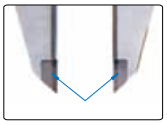

Carbide tipped jaws

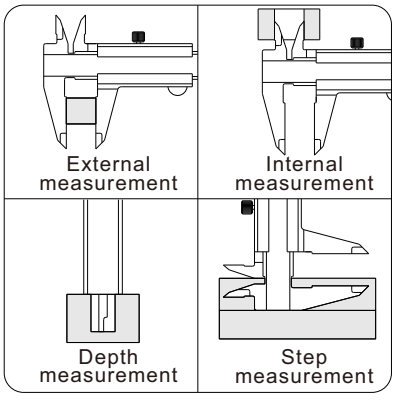

Graduation 0.02mm

Code	Range	Accuracy	a	b	c	h	L
140-006-11	0-150mm	±0.03mm	21	16.5	16	40	235
140-008-11	0-200mm	±0.03mm	24	19	16	50	295
140-012-11	0-300mm	±0.03mm	24	20	17	60	400

Graduation 0.05mm

Code	Range	Accuracy	a	b	c	h	L
140-006-13	0-150mm	±0.05mm	21	16.5	16	40	235
140-008-13	0-200mm	±0.05mm	24	19	16	50	295
140-012-13	0-300mm	±0.05mm	24	20	17	60	400

SERIES 152 DIGITAL OFFSET CALIPER

Data output | CR2032

- Adjust the beam-mounted jaw to facilitate measurement of stepped sections and hard-to reach workpiece
- Resolution: 0.01mm/0.0005"
- Automatic power on/off
- Buttons: on/off, zero, mm/in, INC
- Data output(cable code: 100-03 or 100-04)
- Made of stainless steel

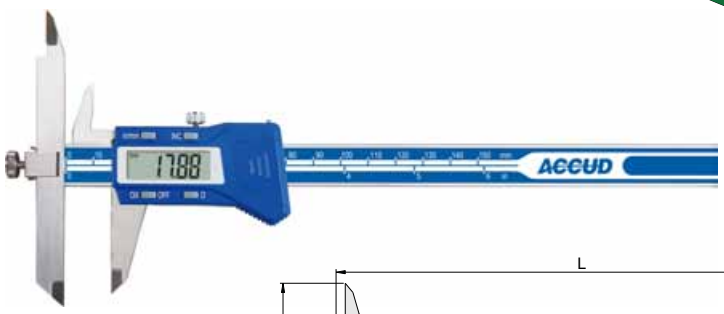

152-006-11

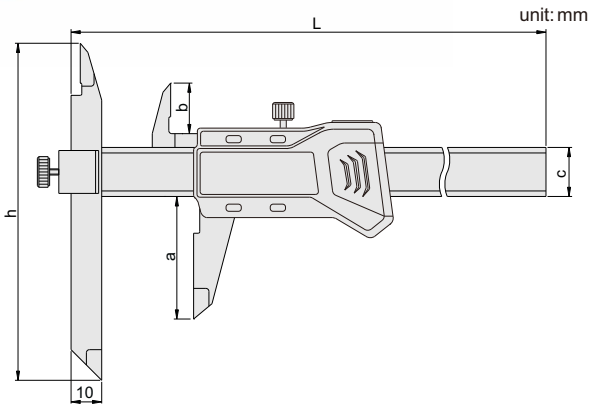

Code	Range	Accuracy	a	b	c	h	L
152-006-11	0-150mm/0-6"	±0.04mm	40	16.5	16	110	239
152-008-11	0-200mm/0-8"	±0.04mm	50	19.5	16	120	289
152-012-11	0-300mm/0-12"	±0.05mm	60	20.5	17	130	399

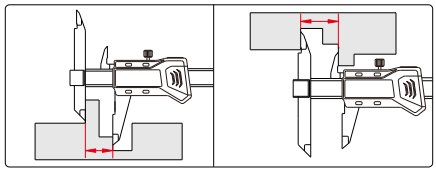

SERIES 162 OFFSET VERNIER CALIPER

- Adjust the beam-mounted jaw to facilitate measurement of stepped sections and hard-to reach workpiece
- Made of stainless steel
- Satin chrome plated reading surface

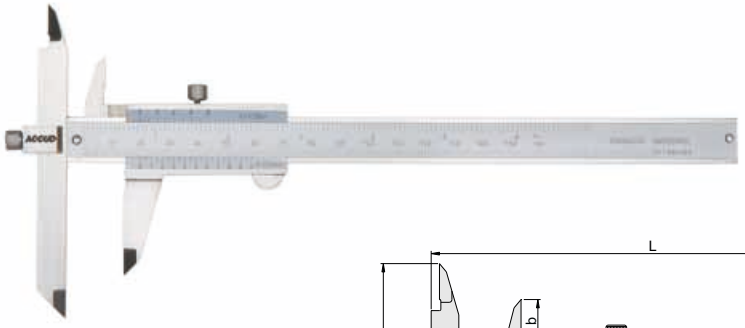

162-006-14

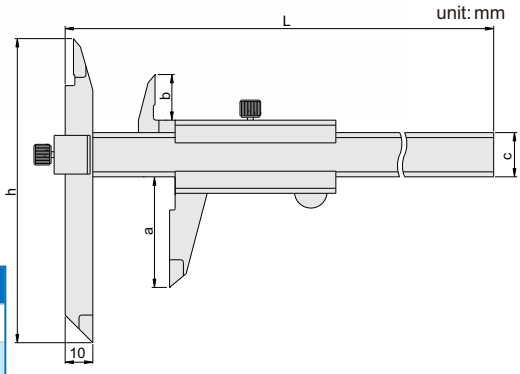

Graduation 0.02mm/0.001"

Code	Range	Accuracy	a	b	c	h	L
162-006-12	0-150mm/0-6"	±0.04mm	40	16.5	16	110	239
162-008-12	0-200mm/0-8"	±0.04mm	50	19.5	16	120	289
162-012-12	0-300mm/0-12"	±0.05mm	60	20.5	17	130	389

Graduation 0.05mm/1/128"

Code	Range	Accuracy	a	b	c	h	L
162-006-14	0-150mm/0-6"	±0.05mm	40	16.5	16	110	239
162-008-14	0-200mm/0-8"	±0.05mm	50	19.5	16	120	289
162-012-14	0-300mm/0-12"	±0.08mm	60	20.5	17	130	389

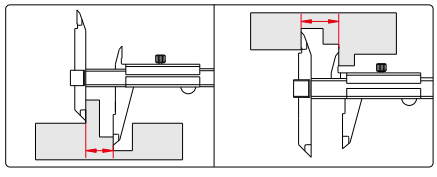

110 LEFT HAND DIGITAL CALIPER

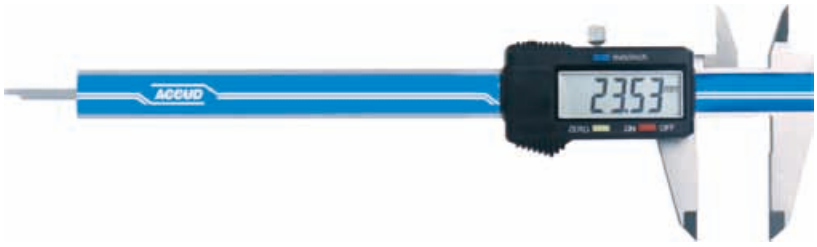

- Non waterproof
- Designed for left handed users
- Resolution: 0.01mm/0.0005
- Buttons: on/off, zero, mm/inch
- Meet DIN862
- Made of stainless steel

unit: mm

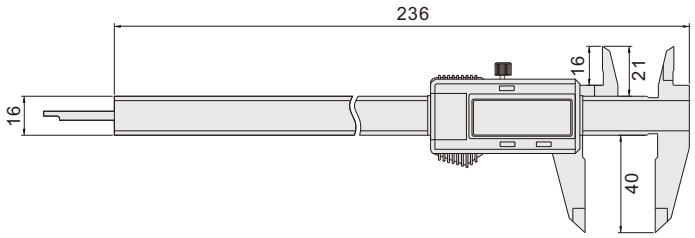

Code	Range	Accuracy
110-006-11	0-150mm/0-6"	±0.03mm

With manufacturer inspection certificate

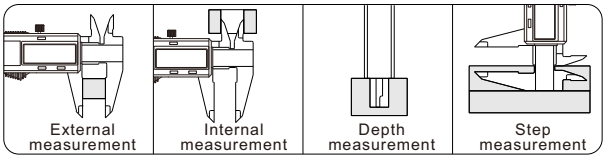

SERIES 105 LEFT HAND VERNIER CALIPER

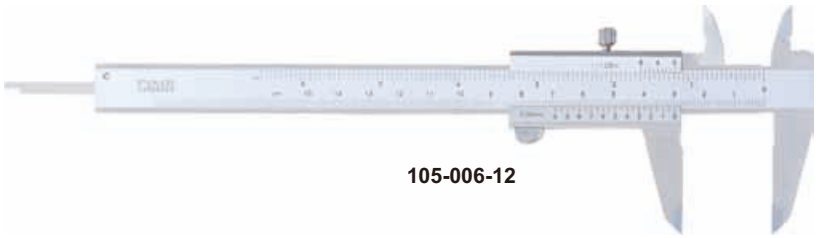

105-006-12

- Designed for left handed users
- Made of stainless steel
- Satin chrome plated reading surface

unit: mm

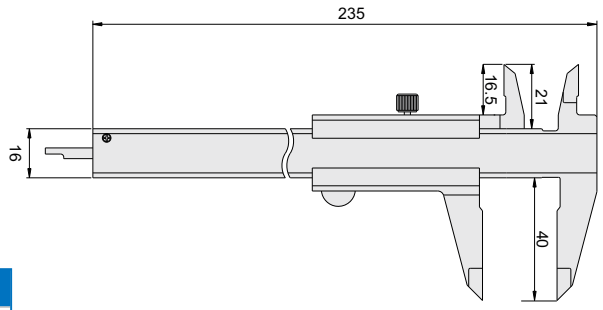

Graduation 0.02mm/0.001"

Code	Range	Accuracy
105-006-12	0-150mm/0-6"	±0.03mm

Graduation 0.05mm/1/128"

Code	Range	Accuracy
105-006-14	0-150mm/0-6"	±0.03mm

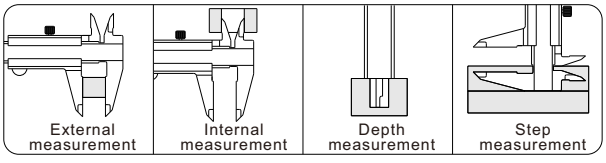

SERIES 154 DIGITAL HOOK CALIPER

Data output | CR2032

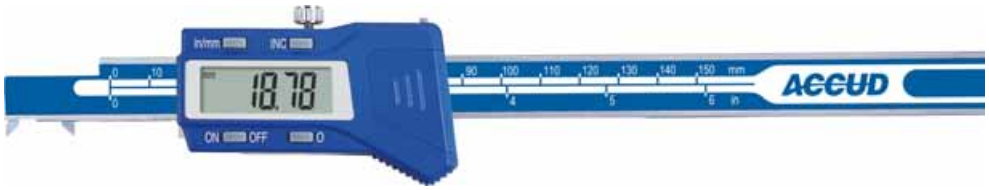

154-005-11

- Measure width of groove inside bores
- Resolution: 0.01mm/0.0005"
- Buttons: on/off, zero, mm/in, INC
- Automatic power on/off
- Data output(cable code: 100-03 or 100-04)
- Made of stainless steel

unit: mm

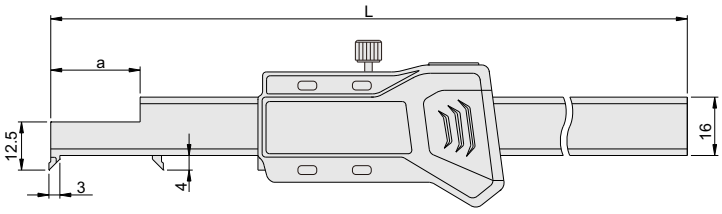

Code	Range	Accuracy	a	L
154-005-11	3-125mm	±0.04mm	24	250
154-008-11	3-200mm	±0.04mm	33	305
154-012-11	3-300mm	±0.05mm	86	460

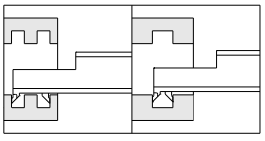

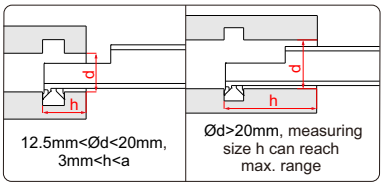

SERIES 154 DIGITAL HOOK CALIPER

Data output | CR2032



154-006-22

- Measure width and distance of grooves inside bores
- Measure width of groove inside bores
- Resolution: 0.01mm/0.0005"
- Buttons: on/off, zero, mm/in, INC
- Automatic power on/off
- Data output(cable code: 100-03 or 100-04)
- Made of stainless steel

unit: mm

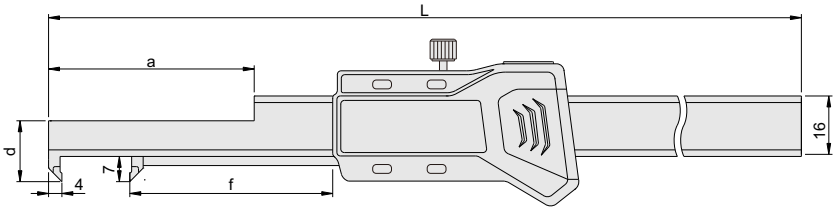

Code	Range	Accuracy	a	d	f	L
154-006-22	0-150mm/0-6"	±0.03mm	52	14	50	275
154-008-22	0-200mm/0-8"	±0.04mm	52	14	50	325
154-012-22	0-300mm/0-12"	±0.04mm	82	15	80	460

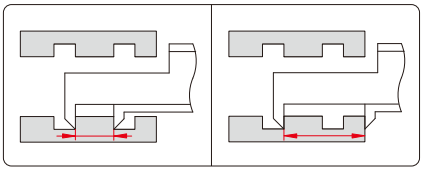

896 DIGITAL V SHAPE CALIPER

CR2032



- Non waterproof
- Measure outside diameter of three number of flutes(such as taps, reamers, end mills and gears)
- Buttons: mm/inch, +, -, SET/0
- Automatic power on/off
- Made of stainless steel

unit: mm

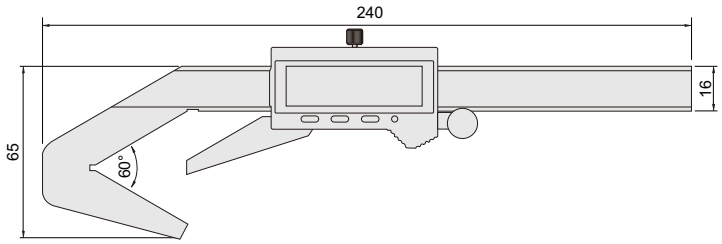

zero setting rod (included)

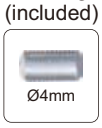

Set zero



Code	Range	Resolution	Accuracy
896-440-11	Ø4-40mm/0.16-1.58"DIA	0.01mm/0.0005"	±0.03mm

891 V SHAPE VERNIER CALIPER



- Measure outside diameter of threenumber of flutes (such as taps,reamers, end mills and gears)
- Made of stainless steel
- Satin chrome plated reading surface

unit: mm

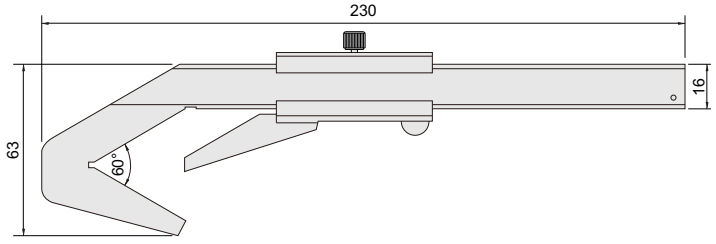

Code	Range	Graduation	Accuracy
891-340-13	Ø4-40mm	0.05mm	±0.05mm

SERIES 169 DIGITAL ARC RADIUS CALIPER

Data output | CR2032



169-006-11

- Measure the radius of arc less than half round
- Resolution: 0.01mm/0.0005"
- Buttons: on/off, zero, mm/in, INC
- Automatic power on/off
- Data output(cable code: 100-03 or 100-04)
- Made of stainless steel

unit: mm

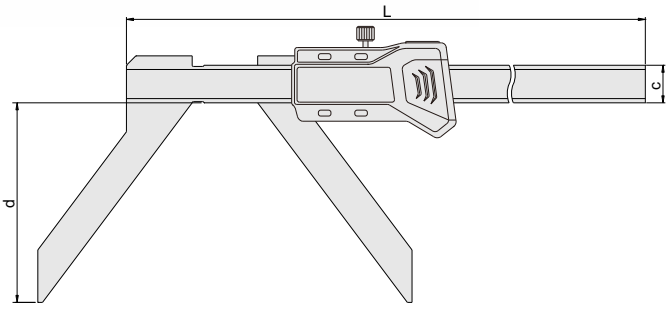

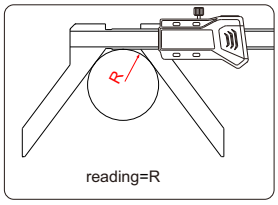

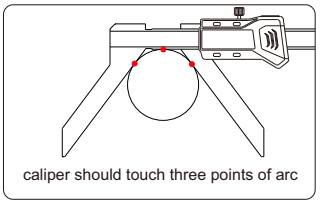

Code	Range(R)	Accuracy	c	d	L
169-006-11	5-150mm/0.2-6"	±0.05mm	16	65	263
169-008-11	5-200mm/0.2-8"	±0.07mm	16	85	313

SERIES 167 DIGITAL CALIPER WITH LARGE MEASURING FACES

Data output | CR2032



167-008-11

- Measure diameter of wire ropes, and thickness of soft materials like rubber, etc.
- Resolution: 0.01mm/0.0005"
- Buttons: on/off, zero, mm/in, INC
- Automatic power on/off
- Data output(cable code: 100-03 or 100-04)
- Made of stainless steel

unit: mm

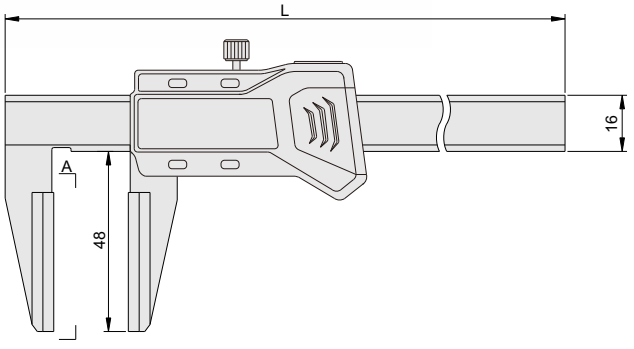

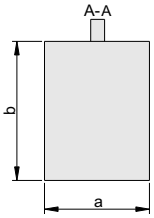

Measure thickness of rubber



Measure diameter of wire ropes

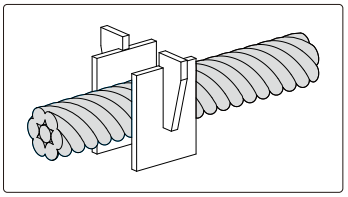

Code	Range	Accuracy	a	b	L
167-006-11	0-150mm/0-6"	±0.07mm	20	30	250
167-008-11	0-200mm/0-8"	±0.07mm	30	40	300
167-012-11	0-300mm/0-12"	±0.07mm	40	50	400

SERIES 107 DIGITAL CALIPER WITH LONG UPPER JAWS

Data output | CR2032

- Non waterproof
- Long upper jaws for measuring diameter of deep holes
- Resolution: 0.01 mm/0.0005"
- Buttons: on/off, zero, mm/in, INC
- Automatic power off, move the digital unit to turn on power
- Data output(cable code: 100-03 or 100-04)
- Made of stainless steel



107-008-11

unit: mm

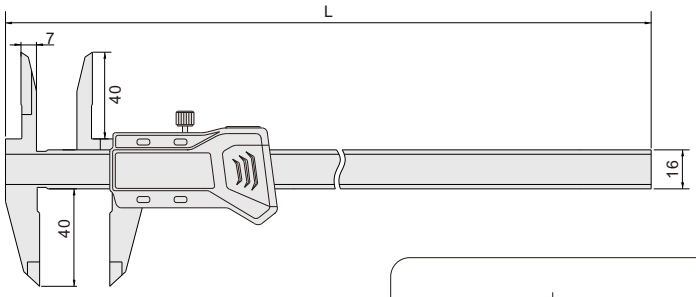

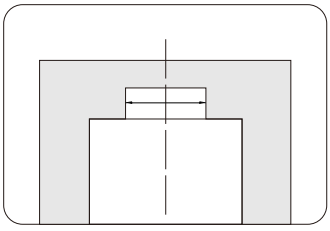

Code	Range	Accuracy	L
107-006-11	0-150mm/0-6"	±0.04mm	236
107-008-11	0-200mm/0-8"	±0.04mm	286

899 DIGITAL CALIPER WITH POSITIONING SURFACES

Certificate | Data output | LR44

- Non waterproof
- Lower jaws with positioning surfaces, for measuring inside diameters quickly
- Resolution:0.01mm/0.0005"
- Buttons: ON/OFF, mm/in, ZERO
- Data output
- Automatic power off
- Made of stainless steel



unit: mm

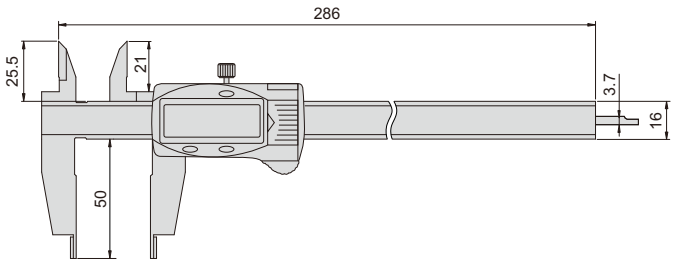

Code	Range	Accuracy
899-008-11	0-200mm/0-8"	±0.03mm

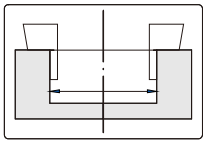

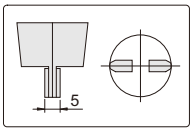

SERIES 142 DIGITAL RTJ RING GROOVE CALIPER

Data output
CR2032

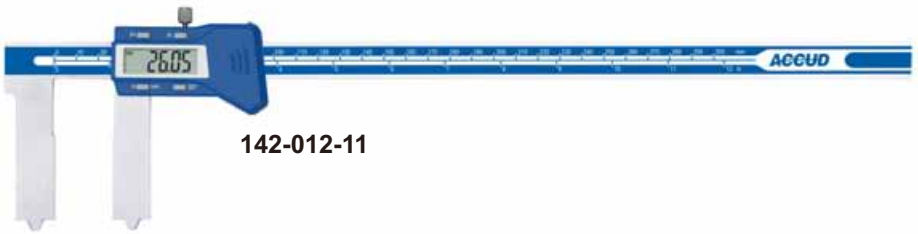

142-012-11

- Measure ring grooves of flange
- Resolution: 0.01mm/0.0005"
- Automatic power on/off
- Buttons: mm/in, SET, preset(P+,P-)
- Preset: 25mm, don't need to add the width of the jaws on the reading
- Data output
- Made of stainless steel

unit: mm

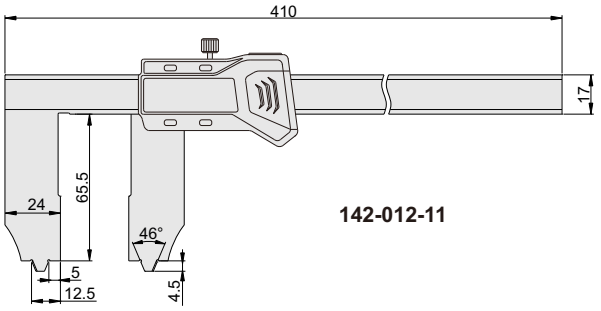

142-012-11

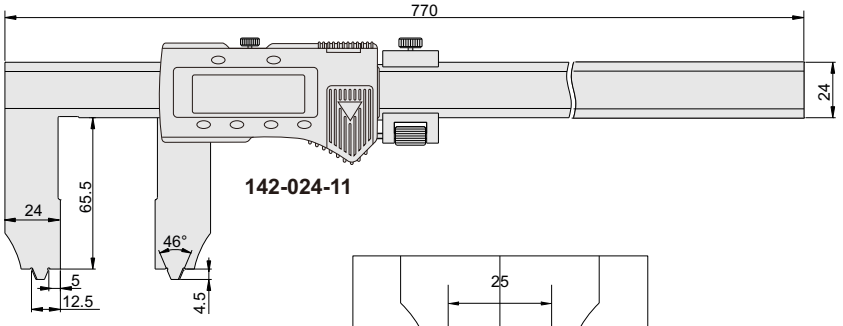

142-024-11

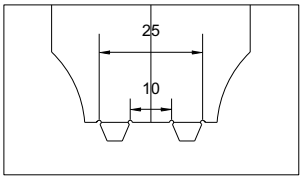

Preset buttons



For range 600mm



Measure outside diameter of RTJ ring groove

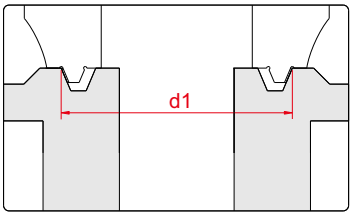

Measure inside diameter of RTJ ring groove

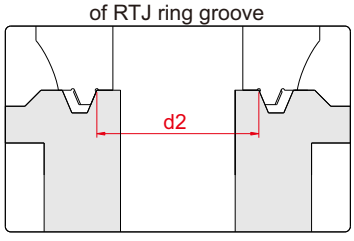

Code	Range (inside diameter of RTJ ring groove)	Range (outside diameter of RTJ ring groove)	Angle of RTJ ring groove	Accuracy
142-012-11	10-300mm/0.4-12"	25-300mm/1-12"	23°	±0.06mm
142-024-11	10-600mm/0.4-24"	25-600mm/1-24"	23°	±0.07mm

SERIES 890 DIGITAL INSIDE GROOVE CALIPER

Data output

CR2032



890-006-11

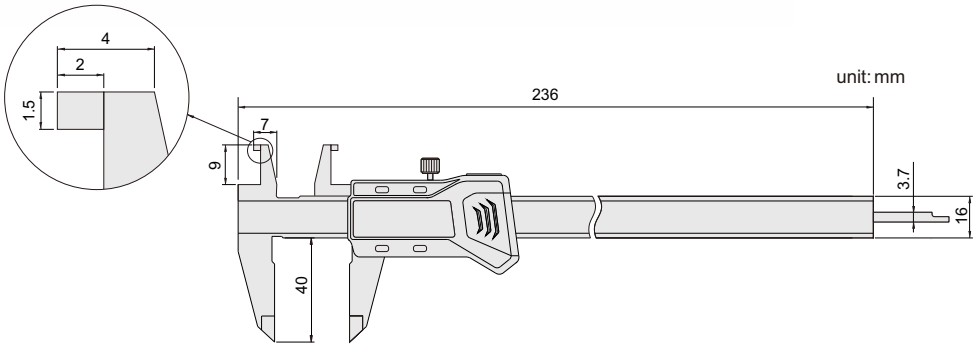



890-006-21

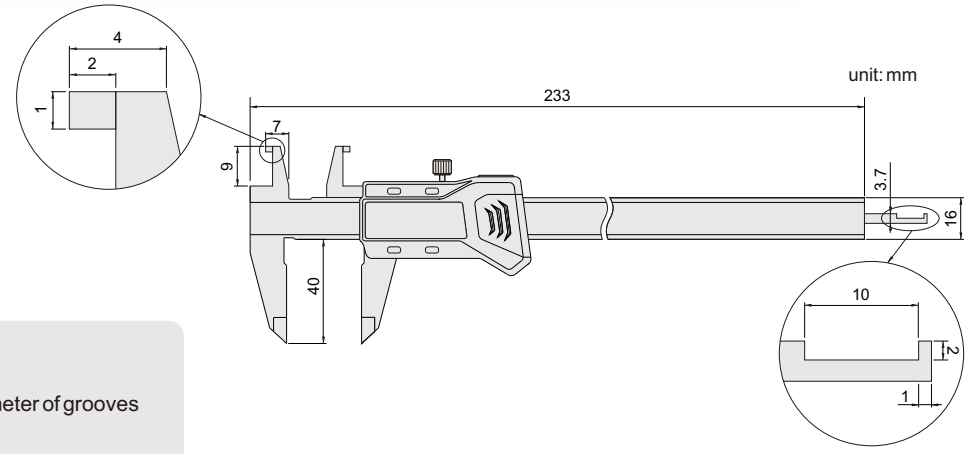

- Non waterproof
- Upper jaws for measuring diameter of grooves
- Resolution: 0.01mm/0.0005"
- Buttons type A: on/off, zero, mm/in, INC
  type B: on/off, set, mm/inch, preset (+, -)
- Automatic power on/off
- Data output(cable code:100-03 or 100-04)
- Made of stainless steel

measure diameter of grooves 8-150mm

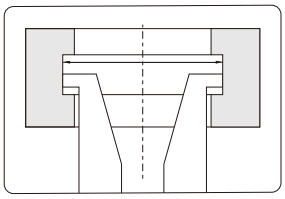

measure depth of grooves (h<10mm, only for 890-006-21)

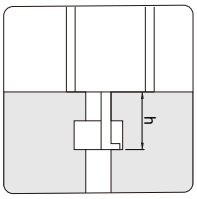

Code	Range of upper jaw	Range of lower jaw	Accuracy
890-006-11	8-150mm/0.3-6"	0-150mm/0-6"	±0.03mm
890-006-21	8-150mm/0.3-6"	0-150mm/0-6"	±0.03mm

895 DIGITAL CALIPER FOR BORES WITH BARRRIER INSIDE

Data output | CR2032



- Non waterproof
- Measure diameter of bores with barrier inside
- Resolution: 0.01mm/0.0005"
- Buttons: mm/in, SET, preset(P+,P-)
- Automatic power on/off
- Data output(cable code: 100-03 or 100-04)
- Made of stainless steel

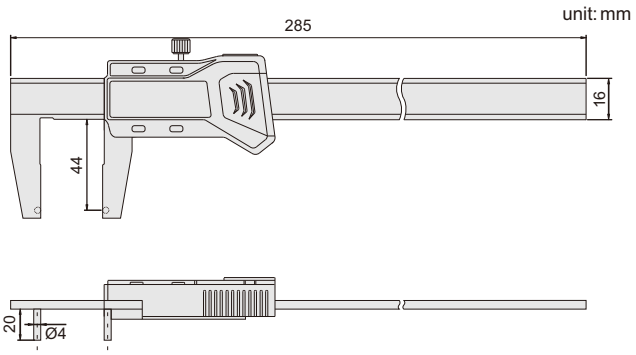

Preset buttons



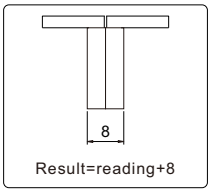

Code	Range (ØD)	Diameter of barrier(Ød)	Accuracy
895-008-11	8-200mm/0.3-8"	<D-8mm(less than85mm)	±0.03mm

885 DIAL CALIPER FOR BORES WITH BARRRIER INSIDE

Shockproof



- Measure diameter of bores with barrier inside
- Shockproof dial indicator
- Dial indicator graduation: 0.02mm
- Made of stainless steel

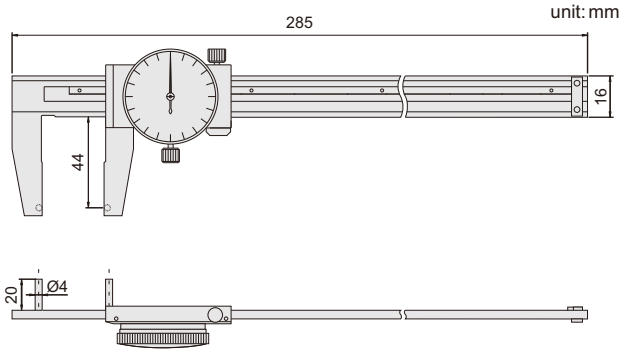

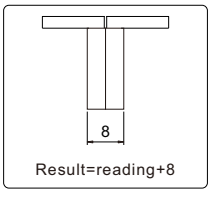

Code	Range (ØD)	Diameter of barrier(Ød)	Accuracy
885-008-21	8-200mm	<D-8mm(less than85mm)	±0.03mm

SERIES 156 DIGITAL GEAR TOOTH CALIPER

LR44

- Resolution: 0.01mm/0.0005"
- Buttons: on/off, zero, mm/inch
- Made of stainless steel

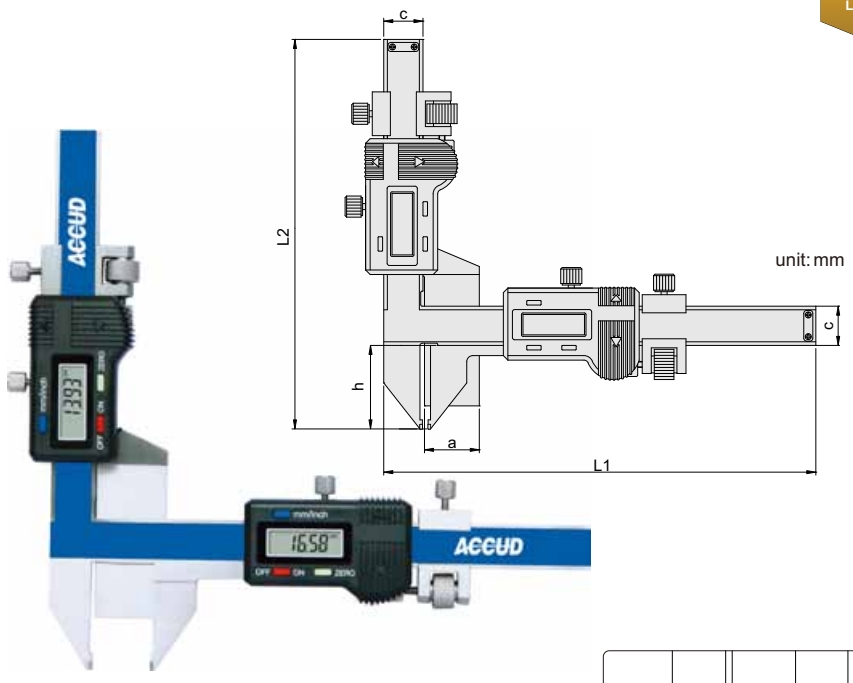

156-001-11

Code	Range	Accuracy	L1	L2	a	c	h
156-001-11	M1-25mm	±0.04mm	170	165.5	21	16	30.5
156-002-11	M5-50mm	±0.04mm	215	215	50.5	16	55

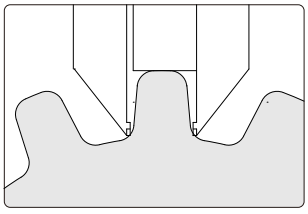

166 VERNIER GEAR TOOTH CALIPER

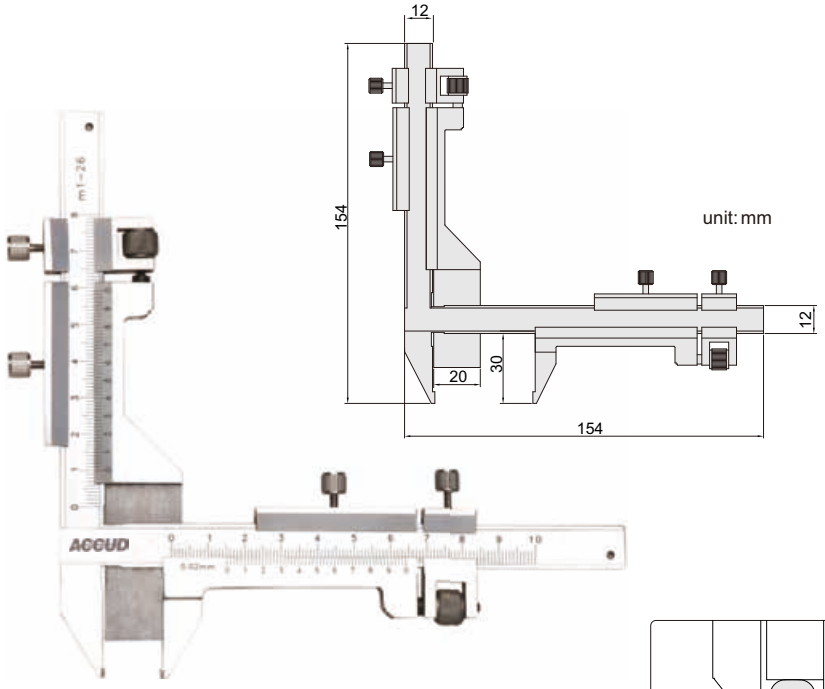

- Graduation: 0.02mm
- Made of stainless steel

Code	Range	Accuracy
166-001-11	M1-26mm	±0.04mm

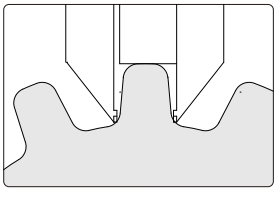

157 DIGITAL DISK BRAKE CALIPER

Data output | CR2032



- Measure thickness of disk brakes
- Resolution: 0.01mm/0.0005"
- Buttons: on/off, zero, mm/in, INC
- Automatic power on/off
- Data output(cable code: 100-03 or 100-04)
- Made of stainless steel

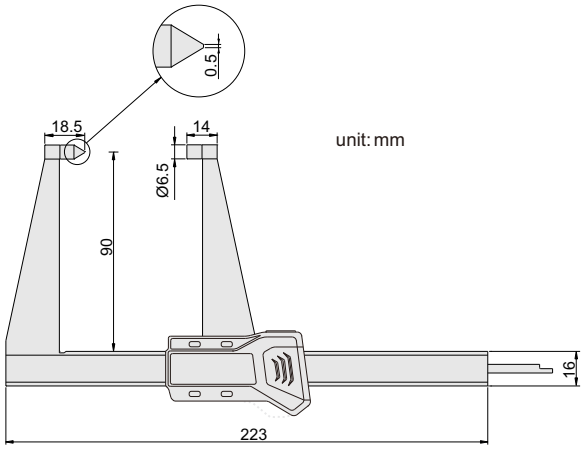

unit: mm

Code	Range	Accuracy
157-005-11	0-125mm/0-5"	±0.05mm

165 DIGITAL DISK BRAKE AND PAD CALIPER

Data output | CR2032



unit: mm

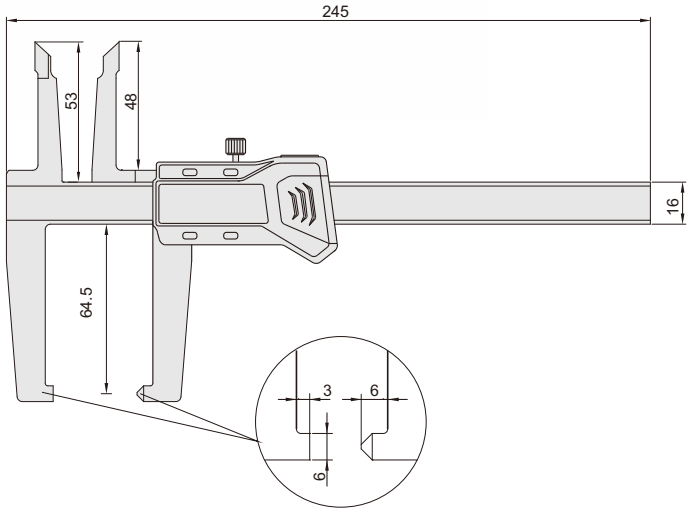

- Measure thickness of disk brakes and pad wear
- Resolution: 0.01mm/0.0005"
- Buttons: on/off, zero, mm/in, INC
- Automatic power on/off
- Data output(cable code: 100-03 or 100-04)
- Made of stainless steel

Code	Range	Accuracy
165-006-11	0-150mm/0-6"	±0.07mm

158 DIGITAL DRUM BRAKE CALIPER

Data output | CR2032



- Measure internal and external diameter of drum brakes
- Resolution 0.01mm/0.0005"
- Buttons: on/off, zero, mm/in, INC
- Automatic power on/off
- Data output(cable code: 100-03 or 100-04)
- Made of stainless steel

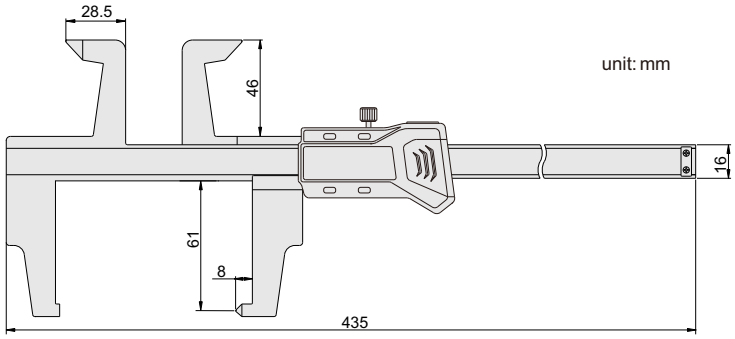

Code	Range	Accuracy
158-012-11	0-300mm/0-12"	±0.07mm

880 CALIPER END GRINDING MACHINE

- Used for grinding the depth measuring surface of the end of calipers



Application



Code	Power supply	Dimension (L xWxH)	Weight
880-000-11	220V, 50/60Hz	370x200x 160mm	15kg

881 CALIPER/MICROMETER LAPPING MACHINE

- For lapping measuring surfaces of caliper lower jaws and outside micrometer
- Suitable for 0-300mm range calipers and 0-100mm range outside micrometers



881-002-11

Caliper lapping block (included)



Micrometer lapping block **(optional)**



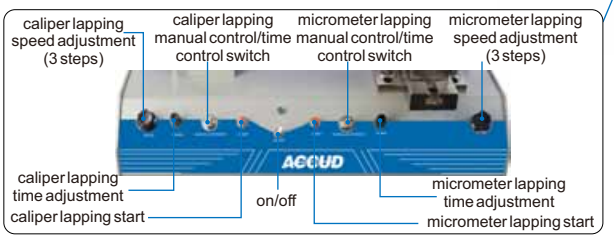

Lapping measuring surfaces of outside micrometer



lapping measuring surfaces of caliper lower jaws



Code	Power supply	Dimension (L xWxH)	Weight
881-002-11	220V, 50/60Hz	430x400x 210mm	28kg

SERIES 881 LAPPING BLOCK

- For caliper/micrometer lapping machine (code: **881-002-11**)

Micrometer lapping block

Code	For micrometer	Remark
881-025-04	0-25mm	include 4 lapping blocks
881-050-04	25-50mm	include 4 lapping blocks
881-075-04	50-75mm	include 4 lapping blocks
881-100-04	75-100mm	include 4 lapping blocks



881-111-30



881-025-04

Caliper lapping block

Code	For caliper	Size
881-111-30	0-300mm	Ø30x14mm

SERIES 179 ACCESSORY FOR CALIPER

VIDEO

- For caliper to increase the stability of depth measurement
- For all calipers which range is 150mm and 200mm and beam width is 16mm
- Made of stainless steel



179-000-00



179-000-01

Application



unit: mm

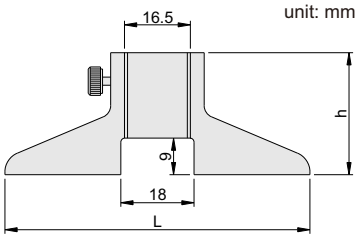

Code	h	L
179-000-00	30	75
179-000-01	32	100

SERIES 197

IP67 WATERPROOF DIGITAL DEPTH CALIPER

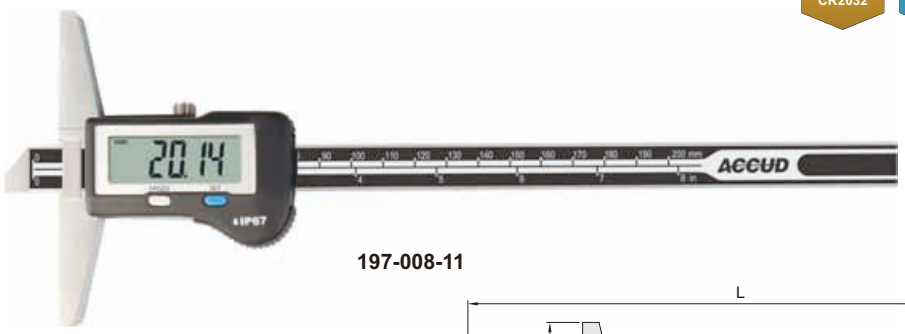

197-008-11

unit: mm

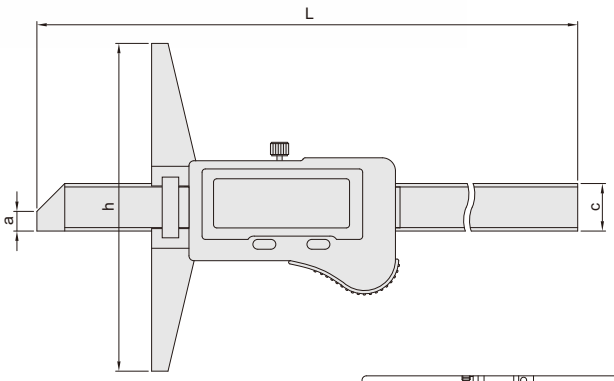

- IP67 protection level
- Absolute measuring system
- Resolution: 0.01mm/0.0005"
- Automatic power off
- Buttons: zero, mm/inch, data preset
- Made of stainless steel

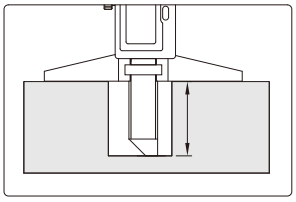

Code	Range	Accuracy	a	c	h	L
197-006-11	0-150mm/0-6"	±0.02mm	5	14.5	100	232
197-008-11	0-200mm/0-8"	±0.02mm	5	14.5	100	285
197-012-11	0-300mm/0-12"	±0.03mm	5	14.5	150	390

SERIES 197

IP67 WATERPROOF DIGITAL DEPTH CALIPER WITH HOLES



197-006-21

unit: mm

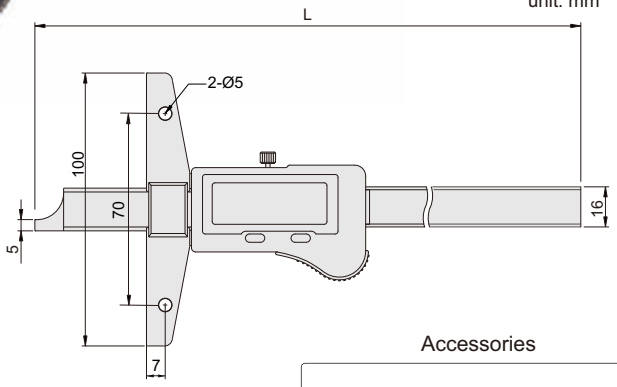

- IP67 protection level
- Absolute measuring system
- Resolution: 0.01mm/0.0005"
- Automatic power off
- Buttons: zero, mm/inch, data preset
- Made of stainless steel
- Optional accessory: series 170 extension base

Code	Range	Accuracy	L
197-006-21	0-150mm/0-6"	±0.02mm	237
197-008-21	0-200mm/0-8"	±0.02mm	287
197-012-21	0-300mm/0-12"	±0.03mm	403

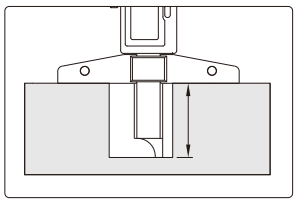

Accessories



SERIES 171 DIGITAL DEPTH CALIPER

Data output | CR2032

- Resolution: 0.01mm/0.0005"
- Automatic power on/off (except **171-040-12**)
- Buttons: on/off, zero, mm/in, INC
- Data output
- Made of stainless steel



171-006-11

171-040-12



unit: mm

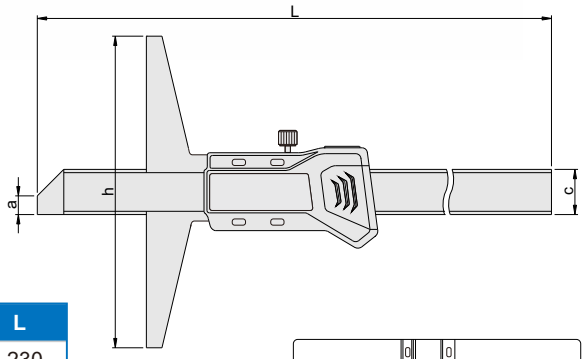

Code	Range	Accuracy	a	c	h	L
171-006-11	0-150mm/0-6"	±0.03mm	6	14.5	100	230
171-008-11	0-200mm/0-8"	±0.03mm	6	14.5	100	280
171-012-11	0-300mm/0-12"	±0.04mm	6	14.5	150	380
171-020-11	0-500mm/0-20"	±0.05mm	7	15	150	585
171-040-12	0-1000mm/0-40"	±0.07mm	7	18	200	1188

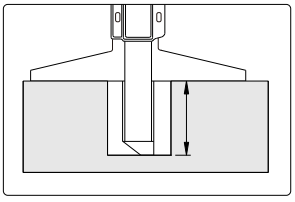

SERIES 171 DIGITAL DEPTH CALIPER

Data output | CR2032

- Resolution: 0.01mm/0.0005"
- Automatic power on/off
- Buttons: on/off, zero, mm/in, INC
- Data output(cable code:100-03 or 100-04)
- Made of stainless steel

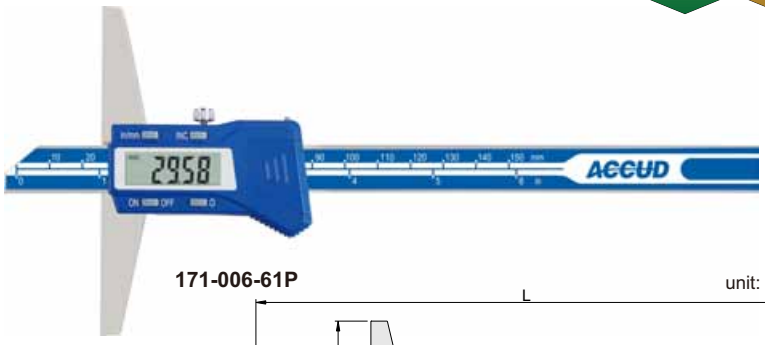

171-006-61P

unit: mm

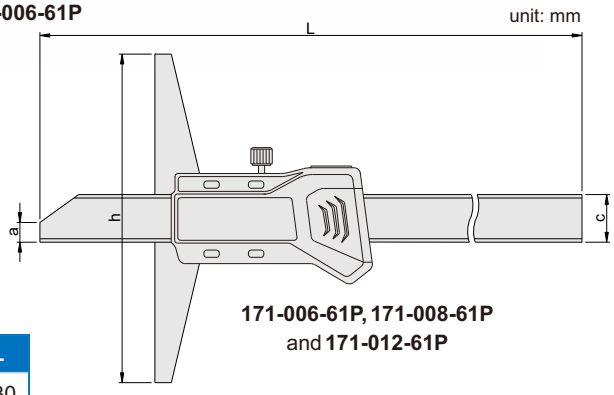

171-006-61P, 171-008-61P and 171-012-61P

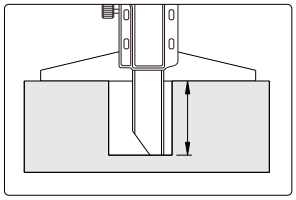

171-020-61P and **171-024-61P**

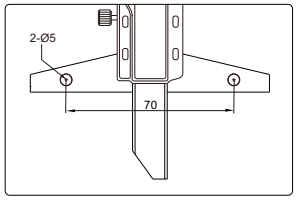

Code	Range	Accuracy	a	c	h	L
171-006-61P	0-150mm/0-6"	±0.03mm	6	14.5	100	230
171-008-61P	0-200mm/0-8"	±0.03mm	6	14.5	100	280
171-012-61P	0-300mm/0-12"	±0.04mm	6	14.5	150	380
171-020-61P	0-500mm/0-20"	±0.05mm	7	16	150	585
171-024-61P	0-600mm/0-24"	±0.05mm	7	16	150	720

Accessory application (**171-020-61P** and **171-024-61P**)



170 series **(optional)**

SERIES 172 DIGITAL PIN DEPTH CALIPER

Data output | CR2032



172-008-11

unit: mm

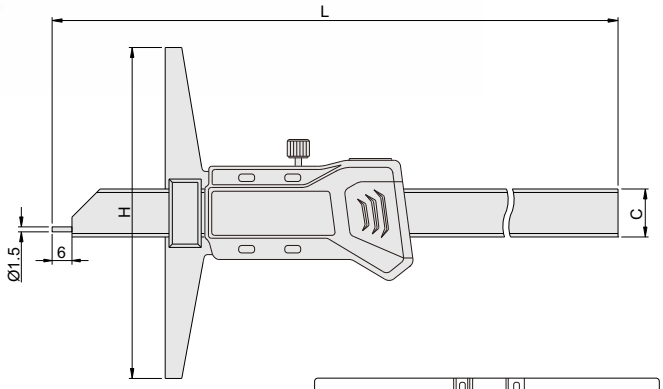

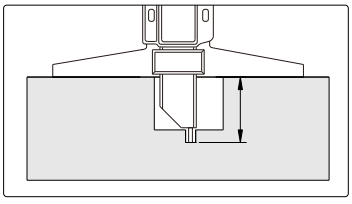

- Measure the depth of small holes or grooves
- Resolution: 0.01mm/0.0005"
- Automatic power on/off
- Buttons: on/off, zero, mm/in, INC
- Data output(cable code:100-03 or 100-04)
- Made of stainless steel

Code	Range	Accuracy	H	L	C
172-008-11	0-200mm/0-8"	±0.03mm	100	291	14.5
172-012-11	0-300mm/0-12"	±0.04mm	150	395	15

SERIES 173 DIGITAL HOOK DEPTH CALIPER

Data output | CR2032

VIDEO

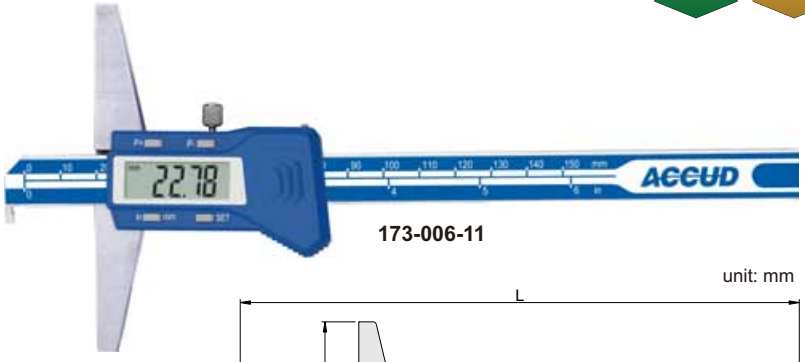

173-006-11

unit: mm

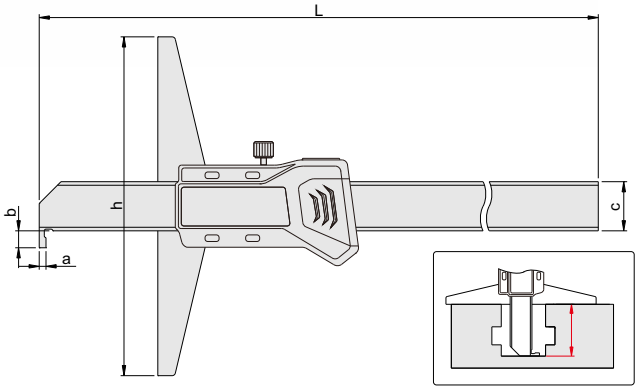

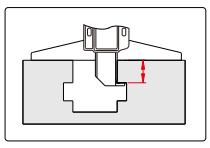

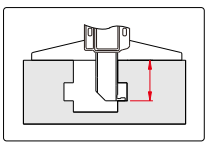

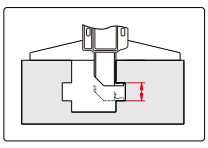

- Measure the depth of grooves
- Resolution: 0.01mm/0.0005"
- Automatic power on/off
- Buttons: mm/in, SET, preset(P+,P-)
- Data output(cable code:100-03 or 100-04)
- Made of stainless steel

Code	Range	Accuracy	a	b	c	h	L
173-006-11	0-150mm/0-6"	±0.04mm	2	5	14.5	100	235
173-008-11	0-200mm/0-8"	±0.04mm	2	5	14.5	100	285
173-012-11	0-300mm/0-12"	±0.05mm	2	5	14.5	150	390
173-020-11	0-500mm/0-20"	±0.05mm	3	8	16	150	623
173-006-21	0-150mm/0-6"	±0.04mm	1	4	14.5	100	235
173-008-21	0-200mm/0-8"	±0.04mm	1	4	14.5	100	285
173-012-21	0-300mm/0-12"	±0.05mm	1	4	14.5	150	390
173-020-21	0-500mm/0-20"	±0.05mm	3	8	16	200	623

SERIES 174 DIGITAL DOUBLE HOOK DEPTH CALIPER

Data output | CR2032

VIDEO



174-006-11

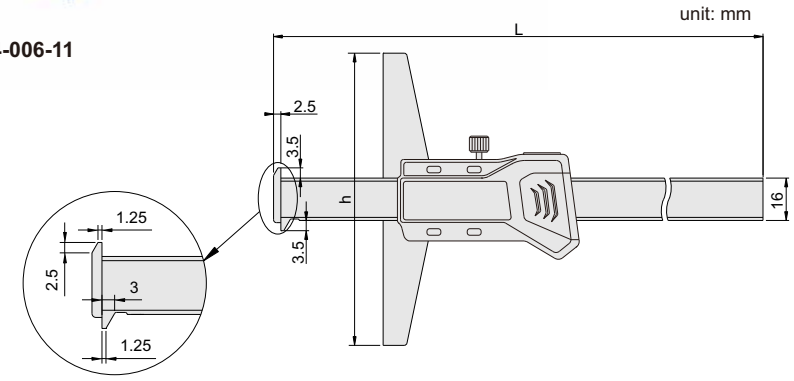

- Measure the depth of grooves
- Resolution: 0.01mm/0.0005"
- Automatic power on/off
- Buttons: on/off, zero, mm/in, INC
- Data output(cable code:100-03 or 100-04)
- Made of stainless steel

Code	Range	Accuracy	h	L
174-006-11	0-150mm/0-6"	±0.03mm	100	233
174-008-11	0-200mm/0-8"	±0.03mm	100	283
174-012-11	0-300mm/0-12"	±0.04mm	150	383

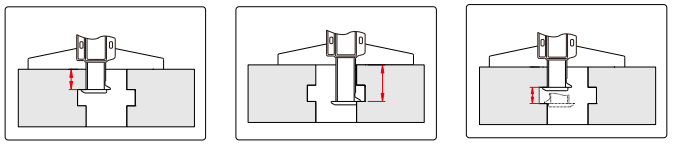

SERIES 191 DIGITAL DEPTH CALIPER WITH HOLES

Data output | CR2032



191-006-11

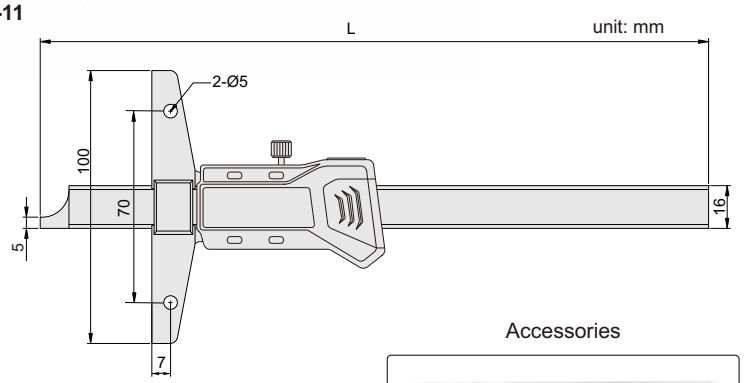

- With hole, for mounting the extension base
- Resolution: 0.01mm/0.0005"
- Buttons: on/off, zero, mm/in, INC
- Automatic power on/off
- Data output(cable code:100-03 or 100-04)
- Made of stainless steel
- Optional accessory: series 170 extension base

Code	Range	Accuracy	L
191-006-11	0-150mm/0-6"	±0.03mm	237
191-008-11	0-200mm/0-8"	±0.03mm	287
191-012-11	0-300mm/0-12"	±0.04mm	403

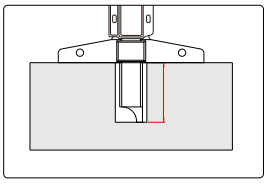

Accessories

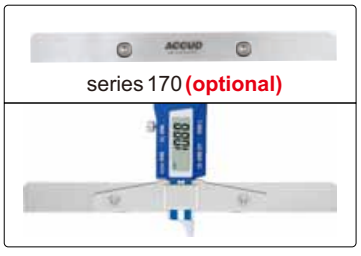

series 170 **(optional)**

SERIES 193 DIGITAL DEPTH CALIPER WITH ROUND DEPTH BAR

Data output | CR2032



193-004-11

- Resolution: 0.01mm/0.0005"
- Supplied with three interchangeable points (flat, spherical, disk)
- Buttons: on/off, set, mm/inch
- Automatic power off
- Data output (cable code: 100-11 or 100-12)
- Made of stainless steel

unit: mm

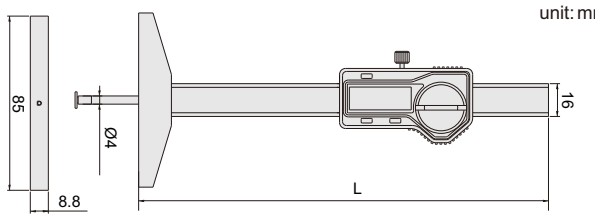

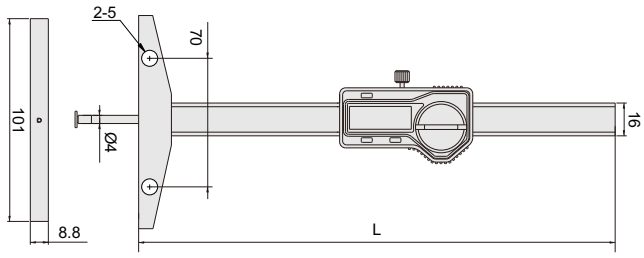

193-006-11,193-008-11 and 193-012-11

Accessory application



170 series **(optional)**

points **(include)**

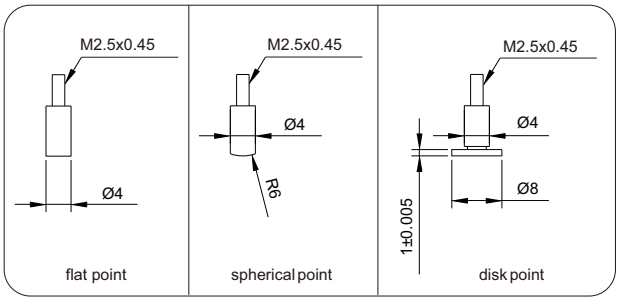

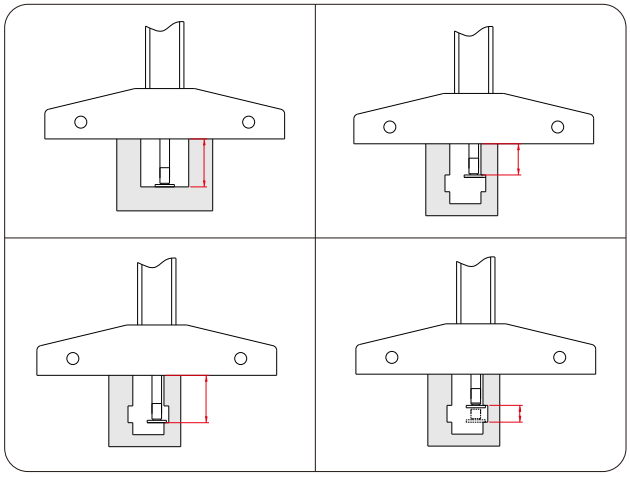

Code	Range	Accuracy	L
193-004-11	0-100mm/0-4"	±0.02mm	200
193-006-11	0-150mm/0-6"	±0.03mm	300
193-008-11	0-200mm/0-8"	±0.03mm	300
193-012-11	0-300mm/0-12"	±0.04mm	400

OPTIONAL ACCESSORIES

Code	Description (h)	Remark
193-T03	1mm disk point	for grooves inside blind hole
193-T04	0.5mm disk point	for grooves inside blind hole
193-T05	0.5mm disk point	for narrow grooves

193-T03 and 193-T04 (optional)

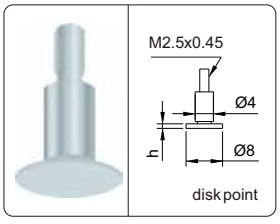

193-T05 (optional)

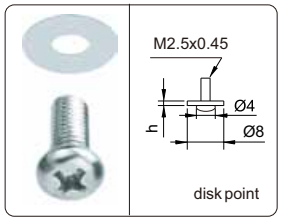

SERIES 194 DIGITAL DEPTH CALIPER WITH ROUND DEPTH BAR

Data output | CR2032

- Measure depth of small groove and hole
- Resolution: 0.01mm/0.0005"
- Buttons: on/off, set, mm/inch
- Automatic power off
- Data output (cable code: 100-11 or 100-12)
- Made of stainless steel

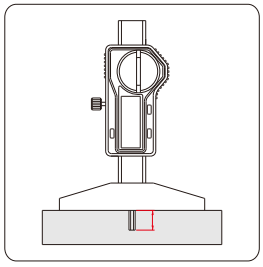



194-002-11

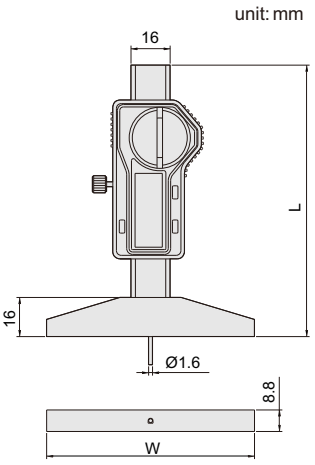

Code	Range	Accuracy	L	W
194-001-11	0-25mm/0-1"	±0.02mm	110	85
194-002-11	0-50mm/0-2"	±0.02mm	135	85
194-006-11	0-150mm/0-6"	±0.03mm	235	100

SERIES 179 DIAL DEPTH CALIPER

Shockproof

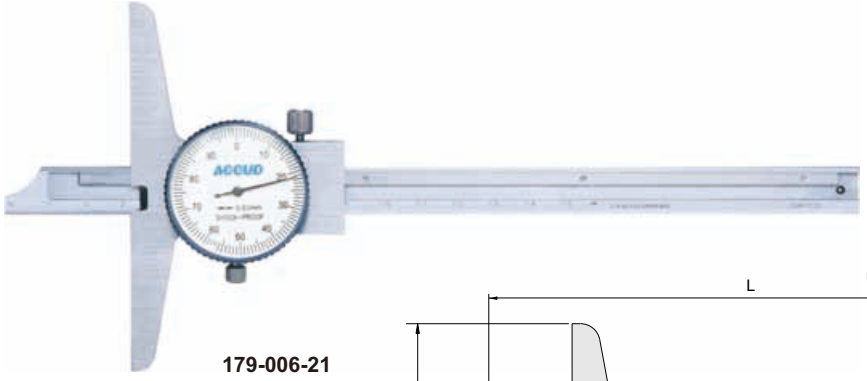

179-006-21

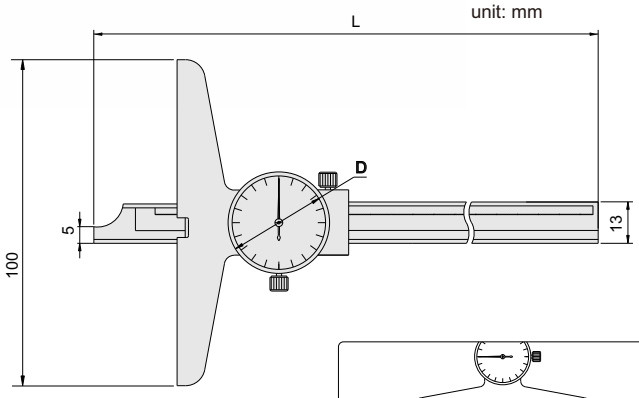

- Shockproof dial indicator
- Graduation: 0.02mm
- Made of stainless steel

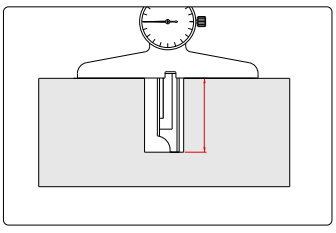

Code	Range	Accuracy	D	L
179-006-21	0-150mm	±0.03mm	Ø39	235
179-008-21	0-200mm	±0.03mm	Ø39	285
179-012-21	0-300mm	±0.04mm	Ø39	308

SERIES 177 VERNIER DEPTH CALIPER

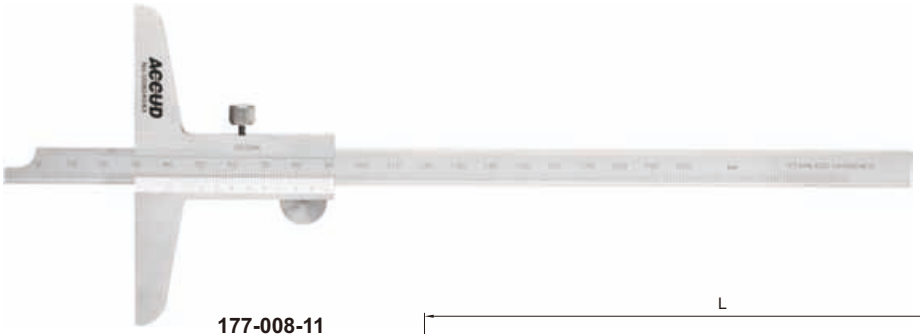

177-008-11

- Graduation: 0.02mm
- Made of stainless steel
- Satin chrome plated reading surface

unit: mm

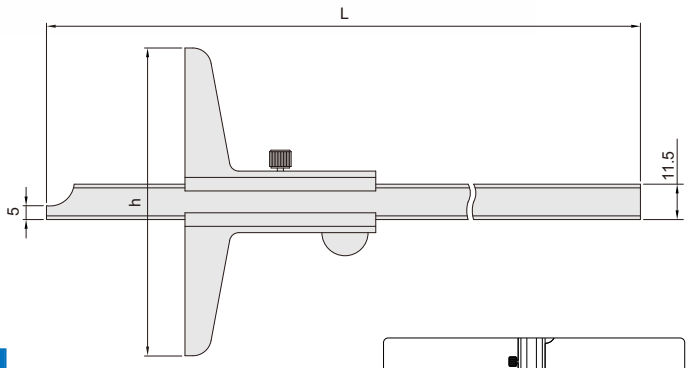

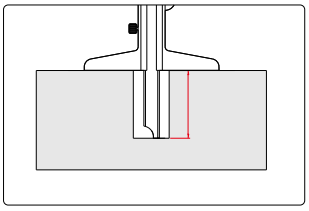

Code	Range	Accuracy	h	L
177-006-11	0-150mm	±0.03mm	100	245
177-008-11	0-200mm	±0.03mm	100	282
177-012-11	0-300mm	±0.04mm	100	382
177-020-11	0-500mm	±0.05mm	150	585

SERIES 175 VERNIER DEPTH CALIPER

- Made of stainless steel
- Satin chrome plating finish on reading surface
- Optional accessory: series 170 extension base

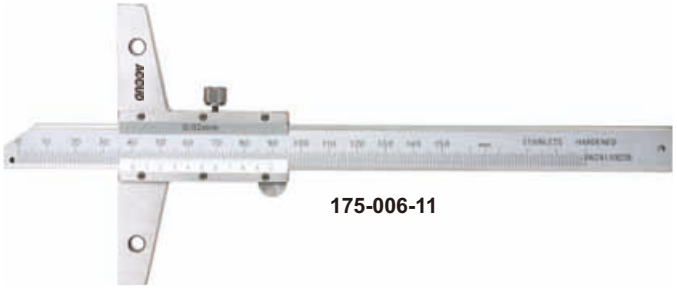

175-006-11

Graduation 0.02mm

Code	Range	Accuracy	c	h	L
175-006-11	0-150mm	±0.03mm	16	100	240
175-008-11	0-200mm	±0.03mm	16	100	290
175-012-11	0-300mm	±0.04mm	16	100	390
175-024-11	0-600mm	±0.05mm	16	150	704
175-040-11	0-1000mm	±0.07mm	18	200	1124

Graduation 0.05mm

Code	Range	Accuracy	c	h	L
175-006-13	0-150mm	±0.05mm	16	100	240
175-008-13	0-200mm	±0.05mm	16	100	290
175-012-13	0-300mm	±0.08mm	16	100	390
175-024-13	0-600mm	±0.10mm	16	150	704
175-040-13	0-1000mm	±0.15mm	18	200	1124

unit: mm

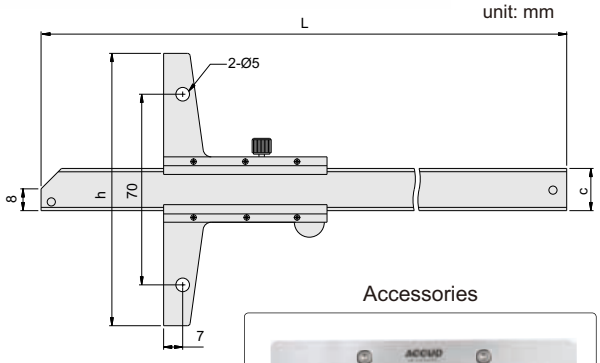

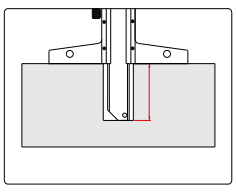

Accessories

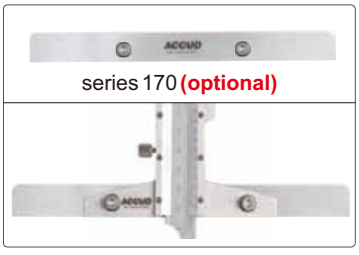

SERIES 178 VERNIER DEPTH CALIPER

- With fine adjustment
- Made of stainless steel
- Satin chrome plating finish on reading surface
- Optional accessory: series 170 extension base

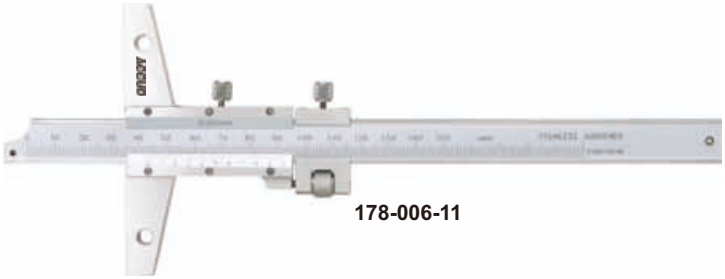

Graduation 0.02mm

Code	Range	Accuracy	c	h	L
178-006-11	0-150mm	±0.03mm	16	100	256
178-008-11	0-200mm	±0.03mm	16	100	306
178-012-11	0-300mm	±0.04mm	16	100	406
178-024-11	0-600mm	±0.05mm	16	150	720
178-040-11	0-1000mm	±0.07mm	18	200	1140

Graduation 0.05mm

Code	Range	Accuracy	c	h	L
178-006-13	0-150mm	±0.05mm	16	100	256
178-008-13	0-200mm	±0.05mm	16	100	306
178-012-13	0-300mm	±0.08mm	16	100	406
178-024-13	0-600mm	±0.10mm	16	150	720
178-040-13	0-1000mm	±0.15mm	18	200	1140

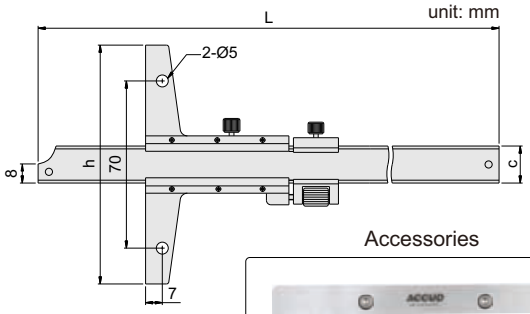

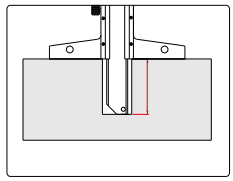

Accessories



SERIES 192 VERNIER HOOK DEPTH CALIPER

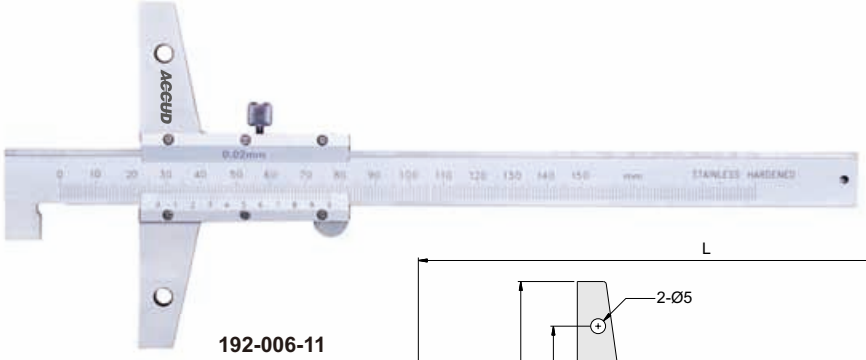

- Graduation: 0.02mm
- Made of stainless steel
- Satin chrome plating finish on reading surface
- Optional accessory: series 170 extension base

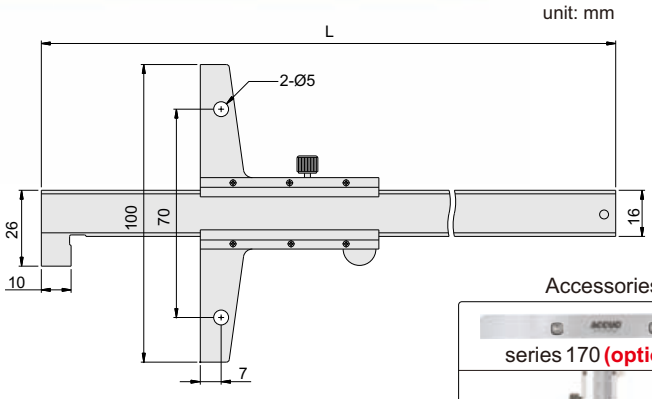

Accessories



Code	Range	Accuracy	L
192-006-11	0-150mm	±0.03mm	245
192-008-11	0-200mm	±0.03mm	295
192-012-11	0-300mm	±0.04mm	395

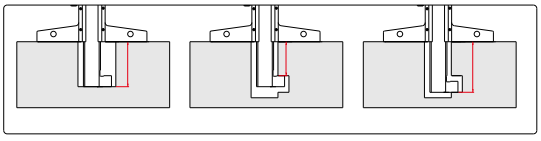

SERIES 170 EXTENSION BASE FOR DEPTH CALIPER

VIDEO



170-260-01

unit: mm

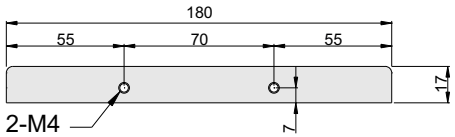

170-180-01

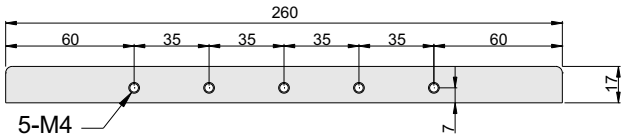

170-260-01

- Add extension base to measure large hole or gap
- For depth caliper 175, 178, 191 ,192 , 197-xxx-21 series and 193(range 150, 200, 300mm) series

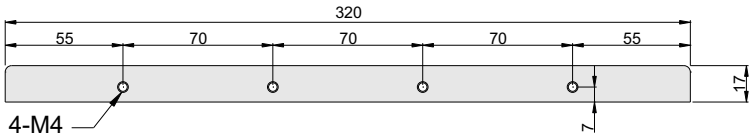

170-320-01

Code	Length
170-180-01	180mm
170-260-01	260mm
170-320-01	320mm

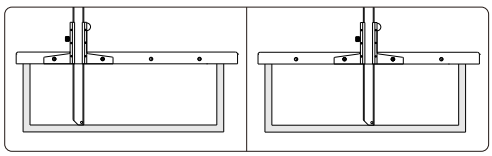

Application

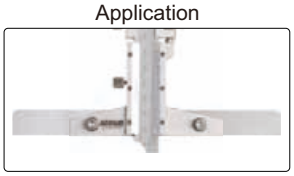

176 DIGITAL DEPTH CALIPER

Data output

CR2032

- Measure the depth of grooves, small holes and tire thread
- Resolution: 0.01mm/0.0005"
- Automatic power on/off
- Buttons: on/off, zero, mm/in, INC
- Data output(cable code:100-03 or 100-04)
- Made of stainless steel

Set zero



Measure tire thread





unit: mm

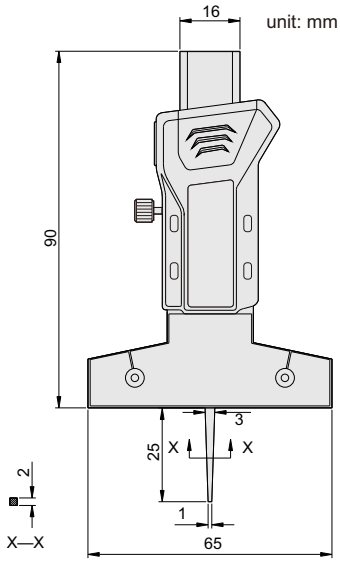

Zero setting block (included)

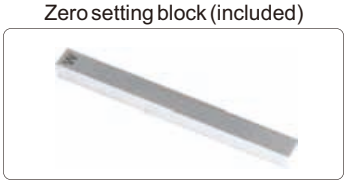

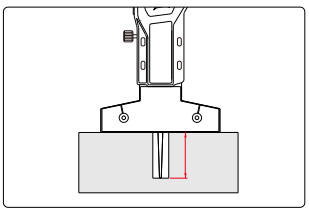

Code	Range	Accuracy
176-001-11	0-25mm/0-1"	±0.03mm

176 DIGITAL DEPTH CALIPER

Data output | CR2032

- Measure depth of small groove and hole
- Resolution: 0.01mm/0.0005"
- Buttons: on/off, zero, mm/in, INC
- Automatic power off
- Data output (cable code: 100-03 or 100-04)
- Made of stainless steel



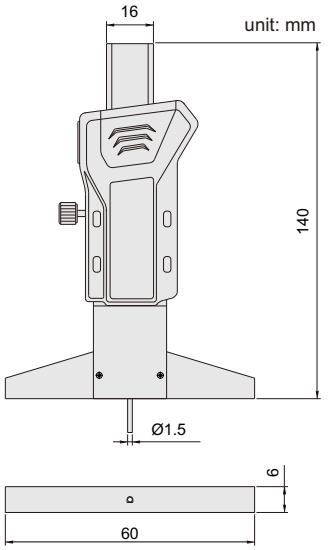

Set zero



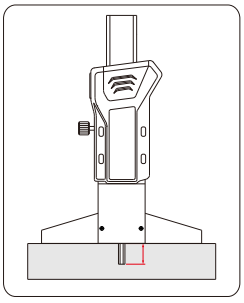

Zero setting block (included)



Code	Range	Accuracy
176-001-21	0-30mm/0-1.2"	±0.03mm

176 VERNIER DEPTH CALIPER

- Measure the depth of grooves, small holes and tire thread
- Graduation: 0.1mm
- Made of stainless steel



unit: mm

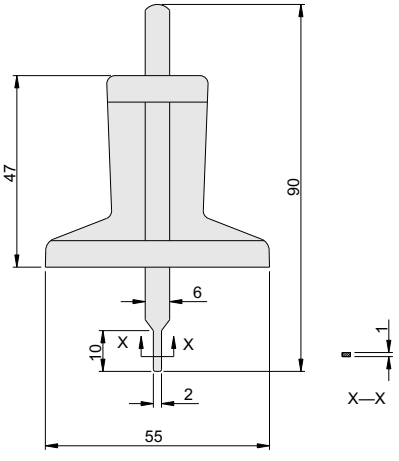

Set zero

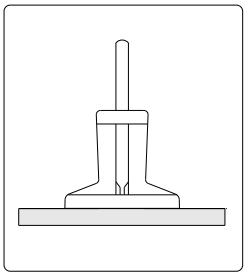

Measure

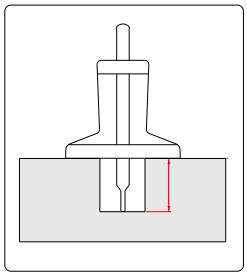

Code	Range	Accuracy
176-030-12	0-30mm	±0.10mm

SERIES 395 DIGITAL DEPTH MICROMETER

IP65 Data output

VIDEO



395-002-01

- Resolution: 0.001mm/0.00005"
- Micrometer head accuracy: ±3μm
  Rod accuracy: ±(2+L/75)μm, L is the measuring range in mm
- Button: on/off, set, mm/inch, ABS/INC, data output
- IP65 protection leve
- Data output
- Automatic power off
- Rods with flat end
- Ratchet stop

unit: mm

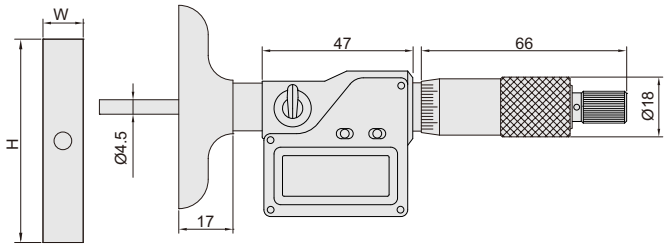

Application

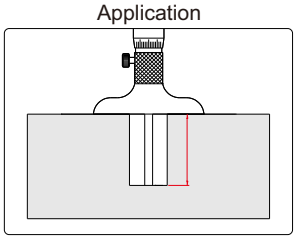

Install rod

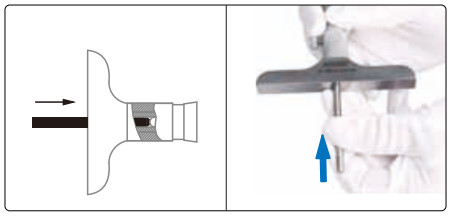

Rod **(included)**

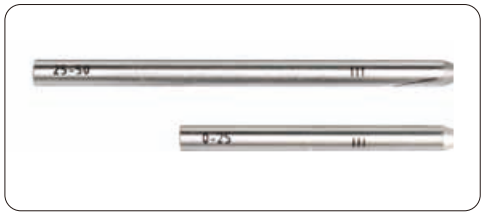

Code	Range	Base(HxW)	Rod
395-001-01	0-25mm/0-1"	101x17mm	1pc
395-002-01	0-50mm/0-2"	101x17mm	2pcs
395-004-01	0-100mm/0-4"	101x17mm	4pcs
395-006-01	0-150mm/0-6"	101x17mm	6pcs
395-008-01	0-200mm/0-8"	101x17mm	8pcs
395-012-01	0-300mm/0-12"	101x17mm	12pcs
395-001-02	0-25mm/0-1"	63x17mm	1pc
395-002-02	0-50mm/0-2"	63x17mm	2pcs
395-004-02	0-100mm/0-4"	63x17mm	4pcs
395-006-02	0-150mm/0-6"	63x17mm	6pcs
395-008-02	0-200mm/0-8"	63x17mm	8pcs
395-012-02	0-300mm/0-12"	63x17mm	12pcs

SERIES 391 DEPTH MICROMETER

- Micrometer head accuracy: ±3μm
- Rod accuracy: ±(2+L/75)μm,
  L is the measuring range in mm
- Supplied with rods
- Ratchet stop

Code	Range	Base (HxW)	Rod
391-001-01	0-25mm	101.5x17mm	1pc
391-002-01	0-50mm	101.5x17mm	2pcs
391-003-01	0-75mm	101.5x17mm	3pcs
391-004-01	0-100mm	101.5x17mm	4pcs
391-006-01	0-150mm	101.5x17mm	6pcs
391-008-01	0-200mm	101.5x17mm	8pcs
391-012-01	0-300mm	101.5x17mm	12pcs
391-001-02	0-25mm	63x17mm	1pc
391-002-02	0-50mm	63x17mm	2pcs
391-003-02	0-75mm	63x17mm	3pcs
391-004-02	0-100mm	63x17mm	4pcs
391-006-02	0-150mm	63x17mm	6pcs
391-008-02	0-200mm	63x17mm	8pcs
391-012-02	0-300mm	63x17mm	12pcs



391-001-01

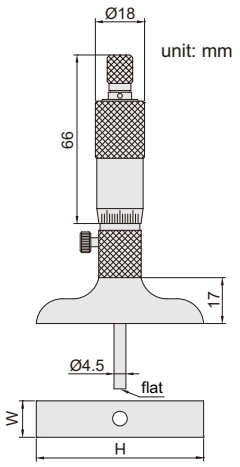

Rod **(included)**



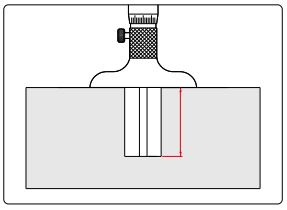

Install rod

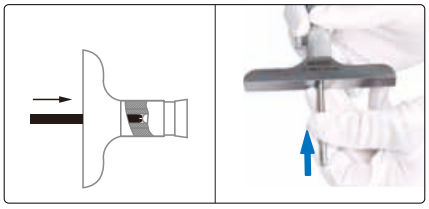

SERIES 392 DEPTH MICROMETER

- Micrometer head accuracy: ±3μm
- Rod accuracy: ±(2+L/75)μm,
  L is the measuring range in mm
- Supplied with rods
- Ratchet stop

Code	Range	Base (HxW)	Rod
392-001-01	0-25mm	101.5x17mm	1pc
392-002-01	0-50mm	101.5x17mm	2pcs
392-003-01	0-75mm	101.5x17mm	3pcs
392-004-01	0-100mm	101.5x17mm	4pcs
392-006-01	0-150mm	101.5x17mm	6pcs
392-008-01	0-200mm	101.5x17mm	8pcs
392-012-01	0-300mm	101.5x17mm	12pcs
392-001-02	0-25mm	63x17mm	1pc
392-002-02	0-50mm	63x17mm	2pcs
392-003-02	0-75mm	63x17mm	3pcs
392-004-02	0-100mm	63x17mm	4pcs
392-006-02	0-150mm	63x17mm	6pcs
392-008-02	0-200mm	63x17mm	8pcs
392-012-02	0-300mm	63x17mm	12pcs



392-001-01

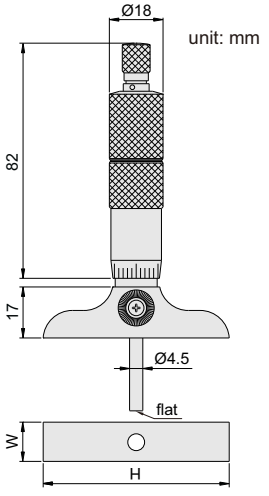

Rod **(included)**

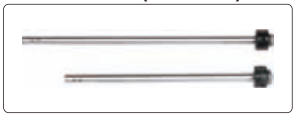

Install rod



Use

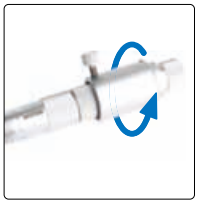

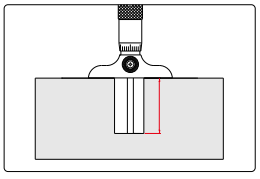

SERIES 293 DIGITAL DEPTH INDICATOR

Data output | CR2032

VIDEO

- Button: tolerance set, data preset, inch/mm conversion, measuring direction set, max./min./range measurement, absolute/incremental measurement
- Data output(cable code:200-03 or 200-04)
- Automatic power off
- Stainless steel base
- Supplied with pointed tip and ball tip



Styli **(included)**

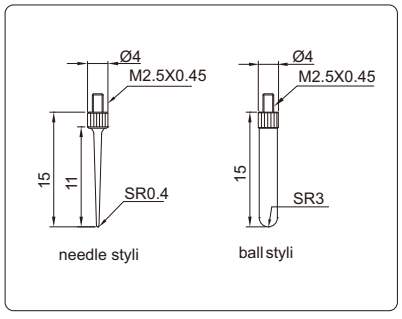

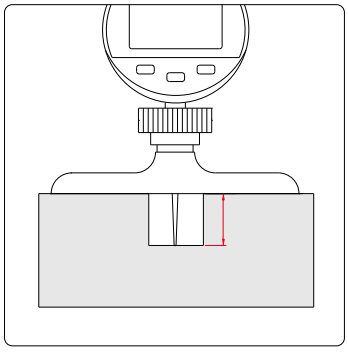

unit: mm

293-010-12

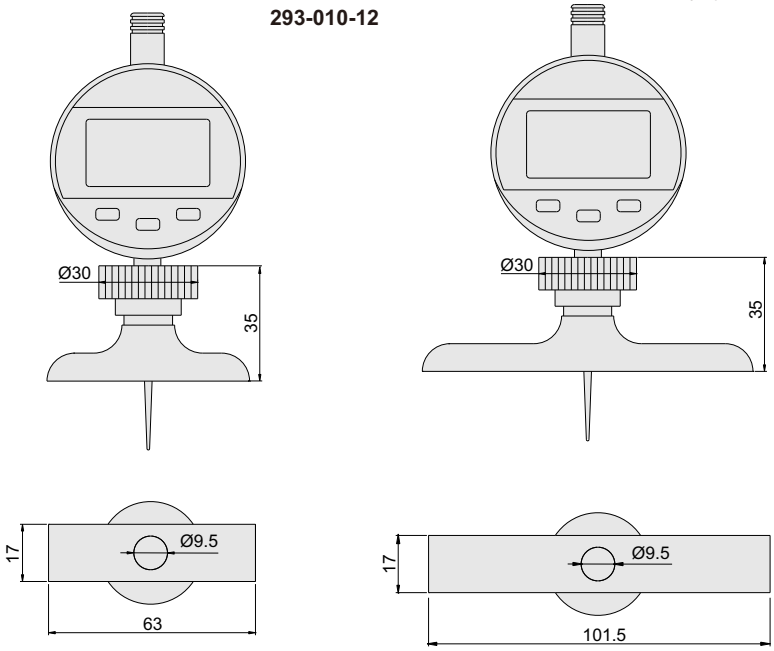

293-010-01 and 293-010-11

293-010-02 and 293-010-12

Resolution 0.001mm/0.00005"

Code	Range	Accuracy	Digital indicator stroke	Base
293-010-01	0-10mm/0-0.4"	±5μm	12.7mm/0.5"	63x17mm
293-010-02	0-10mm/0-0.4"	±5μm	12.7mm/0.5"	101.5x17mm

Resolution 0.01mm/0.0005"

Code	Range	Accuracy	Digital indicator stroke	Base
293-010-11	0-10mm/0-0.4"	±0.03mm	12.7mm/0.5"	63x17mm
293-010-12	0-10mm/0-0.4"	±0.03mm	12.7mm/0.5"	101.5x17mm

SERIES 293 DIGITAL DEPTH INDICATOR

Data output | CR2032

VIDEO

- Button: tolerance set, data preset, inch/mm conversion, measuring direction set, max./min./range measurement, absolute/incremental measurement
- Data output(cable code:200-03 or 200-04)
- Automatic power off
- Stainless steel base
- Supplied with pointed tip and ball tip



293-025-12

Styli **(included)**

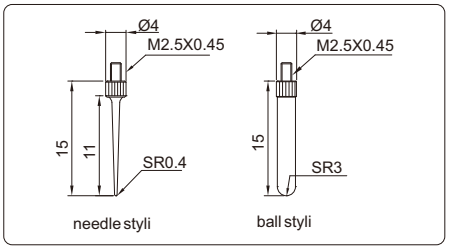

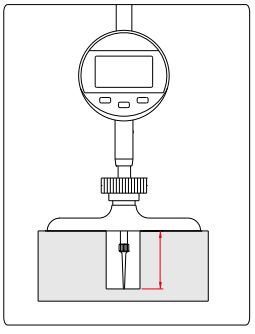

unit: mm

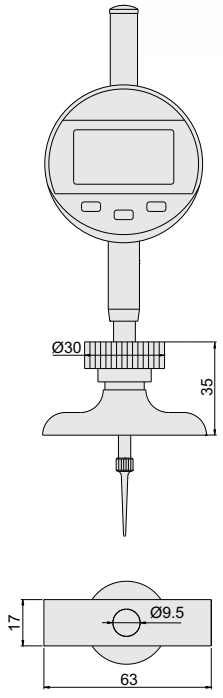

293-025-01 and 293-025-11

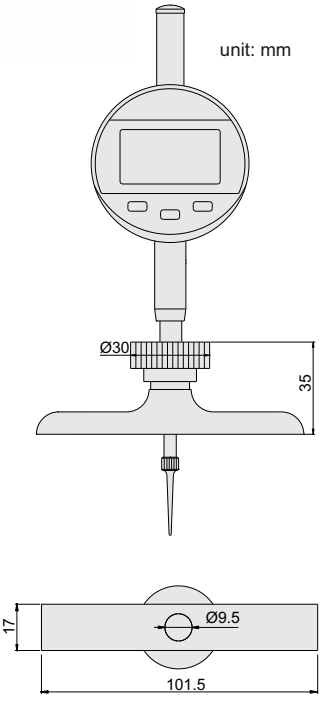

293-025-02 and 293-025-12

Resolution 0.001mm/0.00005"

Code	Range	Accuracy	Digital indicator stroke	Base
293-025-01	0-25mm/0-1"	±5μm	25.4mm/1"	63x17mm
293-025-02	0-25mm/0-1"	±5μm	25.4mm/1"	101.5x17mm

Resolution 0.01mm/0.0005"

Code	Range	Accuracy	Digital indicator stroke	Base
293-025-11	0-25mm/0-1"	±0.03mm	25.4mm/1"	63x17mm
293-025-12	0-25mm/0-1"	±0.03mm	25.4mm/1"	101.5x17mm

SERIES 293 DIGITAL DEPTH INDICATOR

Data output

CR2032

VIDEO

- Button: tolerance set, data preset, inch/mm conversion, measuring direction set, max./min./range measurement, absolute/incremental measurement
- Data output(cable code:200-03 or 200-04)
- Automatic power off
- Stainless steel base
- Supplied with pointed tip and ball tip



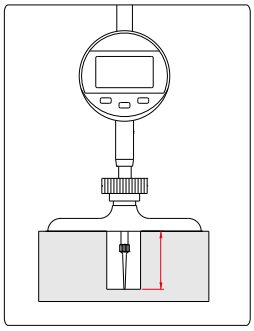

293-300-12

Extension rods **(included)**

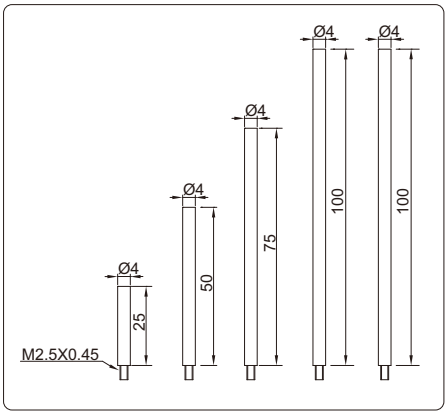

Styli **(included)**

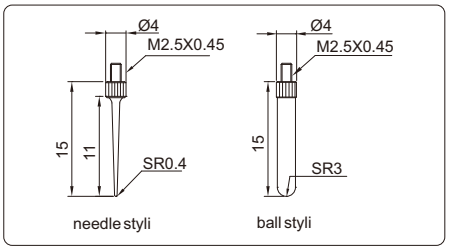

unit: mm

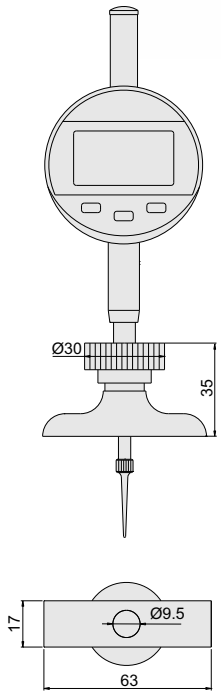

293-300-11 and 293-300-01

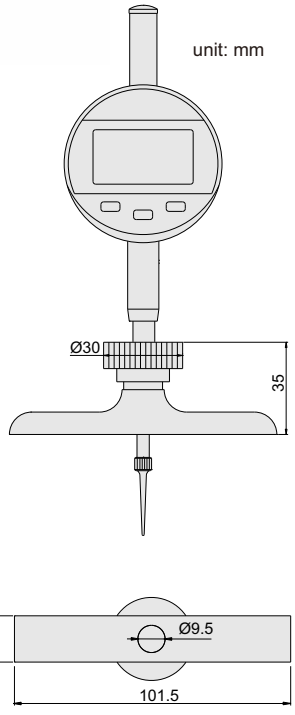

293-300-12 and 293-300-02

Resolution 0.001mm/0.00005"

Code	Range	Accuracy	Digital indicator stroke	Base
293-300-01	0-300mm/0-12"	±5μm	25.4mm/1"	63x17mm
293-300-02	0-300mm/0-12"	±5μm	25.4mm/1"	101.5x17mm

Resolution 0.01mm/0.0005"

Code	Range	Accuracy	Digital indicator stroke	Base
293-300-11	0-300mm/0-12"	±0.03mm	25.4mm/1"	63x17mm
293-300-12	0-300mm/0-12"	±0.03mm	25.4mm/1"	101.5x17mm

SERIES 292 DIAL DEPTH INDICATOR

- Graduation: 0.01mm
- Indicator travel: 30mm
- Accuracy: ±0.03mm
- Stainless steel base
- With needle and ball styli
- Extension rod: 25mm (1pc), 50mm (1pc), 75mm (1pc), 100mm (2pcs)



292-300-12

unit: mm

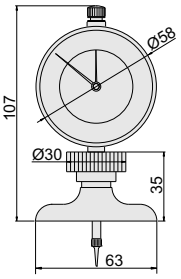

292-300-11

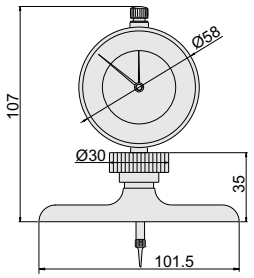

292-300-12

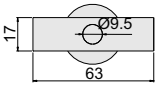

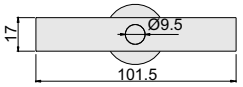

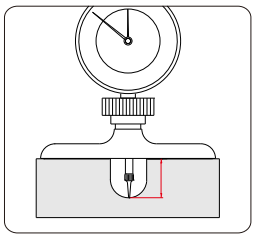

Extension rods

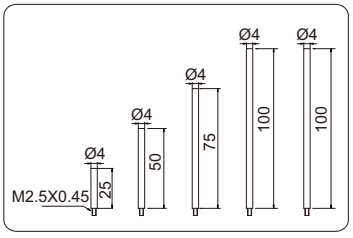

Styli **(included)**

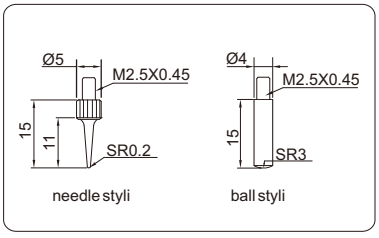

Code	Range	Base
292-300-11	0-300mm	63x17mm
292-300-12	0-300mm	101.5x17mm

SERIES 291 DIAL DEPTH INDICATOR

- Graduation: 0.01mm
- Indicator travel: 10mm
- Accuracy: ±0.03mm
- Stainless steel base
- With needle and ball styli



291-010-12

unit: mm

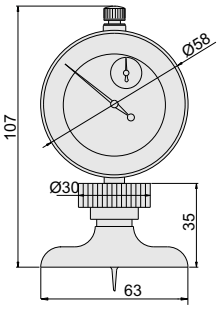

291-010-11

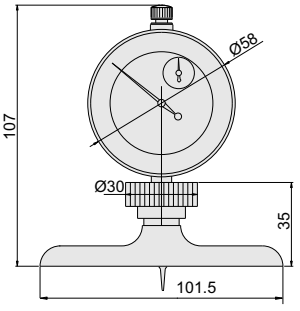

291-010-12

Styli **(included)**

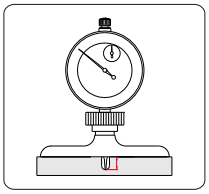

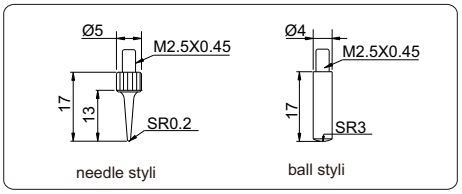

Code	Range	Base
291-010-11	0-10mm	63x17mm
291-010-12	0-10mm	101.5x17mm

SERIES 295 DIAL DEPTH INDICATOR

- Stainless steel base
- Pointed tip





295-010-12

295-010-11

unit: mm

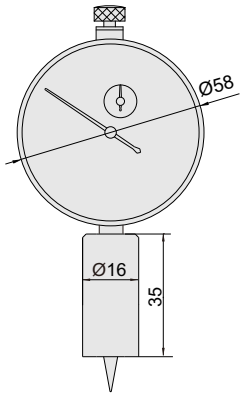

295-010-11

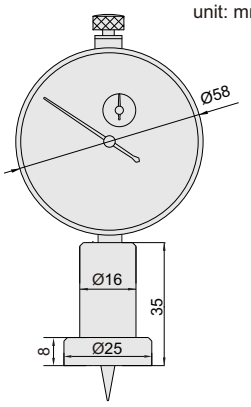

295-010-12

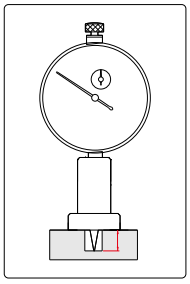

Code	Range	Accuracy	Dial indicator stroke	Dial indicator graduation	Base
295-010-11	0-10mm	±20μm	10mm	0.01mm	Ø16mm
295-010-12	0-10mm	±20μm	10mm	0.01mm	Ø25mm

SERIES 299 DIGITAL DEPTH INDICATOR

Data output CR2032

- Button: on/off, zero, mm/inch, ABS, data preset, change measuring direction
- Data output(cable code:200-03 or 200-04)
- Automatic power off
- Stainless steel base
- Pointed tip



299-010-02

unit: mm

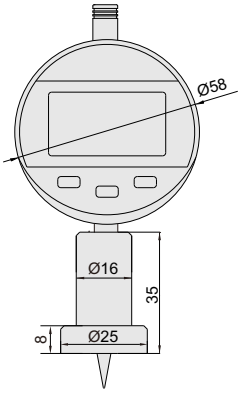

Type B

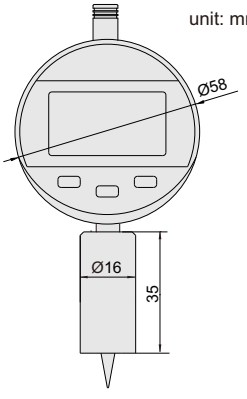

Type A

Resolution 0.01mm/0.0005"

Code	Range	Accuracy	Digital indicator stroke	Base	Type
299-010-11	0-12.7mm/0-0.5"	±20μm	12.7mm/0.5"	Ø16mm	A
299-010-12	0-12.7mm/0-0.5"	±20μm	12.7mm/0.5"	Ø25mm	B

Resolution 0.001mm/0.00005"

Code	Range	Accuracy	Digital indicator stroke	Base	Type
299-010-01	0-12.7mm/0-0.5"	±5μm	12.7mm/0.5"	Ø16mm	A
299-010-02	0-12.7mm/0-0.5"	±5μm	12.7mm/0.5"	Ø25mm	B



299-010-11

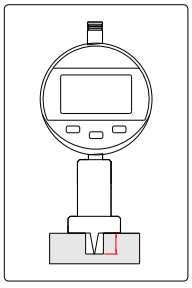

480 DIGITAL DEPTH GAUGE (60°KNIFE EDGE BASE)

Data output | CR2032

- Button: on/off, zero, inch/mm conversion, measuring direction set, data preset absolute/incremental measurement
- Automatic power off (time is adjustable)
- Data output(cable code: 200-03 or 200-04)
- Stainless steel base with 60° knife edge



unit: mm

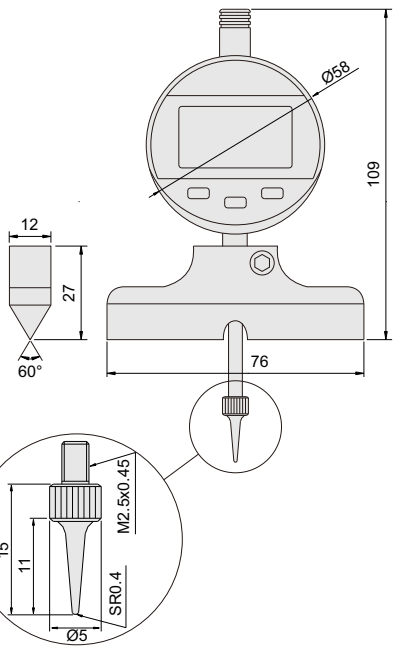

Code	Range	Digital indicator stroke	Digital indicator accuracy	Digital indicator resolution
480-010-11	0-12.7mm/0-0.5"	12.7mm/0.5"	20μm	0.01mm/0.0005"

SERIES 399 DEPTH MICROMETER CHECKERS

Certificate

- To check depth micrometers and set zero
- Constructed with steel gage blocks
- Supplied with anvil block

Application



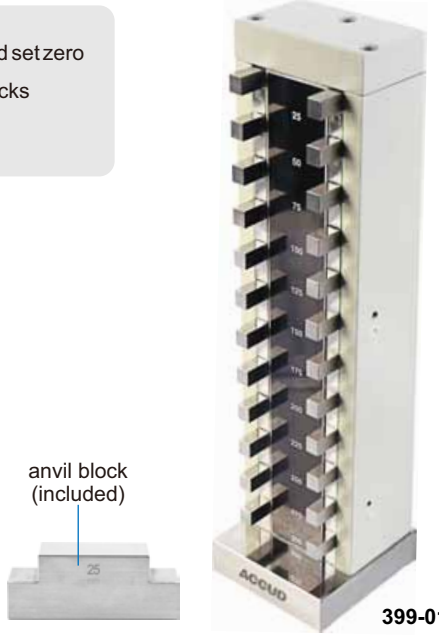

399-012-01

unit: mm

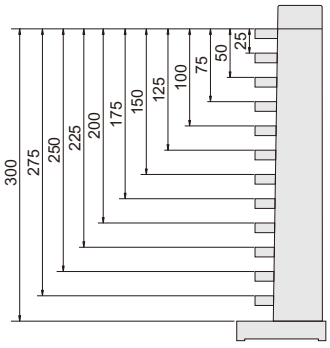

399-012-01

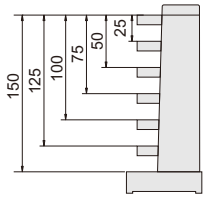

399-006-01

Code	Size	Range	Accuracy
399-006-01	0-150mm	25, 50, 75, 100, 125, 150mm	±2μm
399-012-01	0-300mm	25, 50, 75, 100, 125, 150, 175, 200, 225, 250, 275, 300mm	±3μm

With manufacturer inspection certificate

SERIES HG DIGITAL HEIGHT GAGE WITH STAND

Data output

- Working table is made of ceramic
- Response speed: max.5000mm/sec
- Easy convert between metric and inch8 bits
- Highlight green LED
- Power off automatically
- Data output (USB port)
- Optional accessories series 270



HG100E

Needle contact point

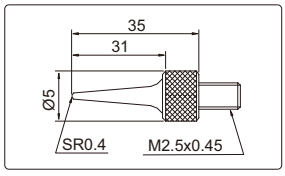

Ball contact point

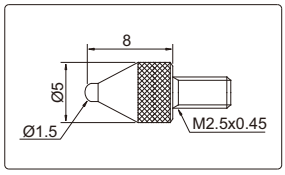

unit:mm

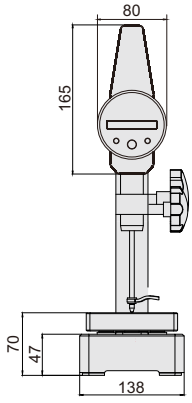

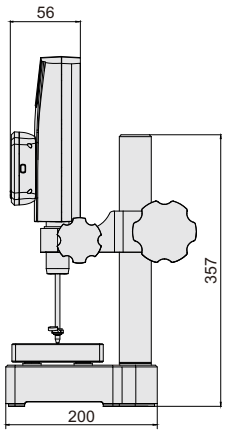

SPECIFICATION

Code	HG50H	HG100H	HG50E	HG100E	HG50S	HG100S
Measuring range	0-50mm	0-100mm	0-50mm	0-100mm	0-50mm	0-100mm
Accuracy	1μm*	2μm*	2μm*	3μm*	3μm*	4μm*
Resolution	0.1μm/1μm(adjustable)		0.5μm/1μm(adjustable)		1μm	
Repeatibility	0.2μm	0.4μm	0.5μm	1μm	1μm	2μm
Tip force	≤1.2N	≤1.6N	≤1.2N	≤1.6N	≤1.2N	≤1.6N
Dimension of working table	130x130mm					
Flatness of working table	1.5μm					
Power supply	5V/1A adapter					
Working temperature	0°C - 40°C					
Weight	11.6kg					

*Working temperature is 20±1ºC

INCLUDED ACCESSORIES

Main unit	1pc
Stand with ceramic table	1pc
Needle contact point	1pc
Ball contact point	1pc
AD/DC adapter	1pc
Spindle lift knob	2pcs

AccuGage700/1000 2D HEIGHT GAGE

Certificate

- The instrument is suitable for One-Dimensional as well as Two-Dimensional measurements
- Programming, for batch quantities measurements
- Color LCD screen
- The probe moves up and down automatically
- Low and high limits with judgement
- Built-in air compressor provides smooth movement on granite surface plate.
- With re-chargeable battery, for 10 hours working
- With manufacturer inspection certificate

VIDEO



AccuGage700

Ø2mm ruby ball probe

Optional Accessories

unit: mm

Ø1mm concentric ruby ball probe(code:**R1HC**)

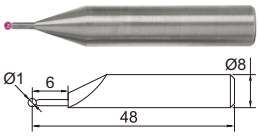

Ø3mm eccentric ruby ball probe(code:**R3H100**)

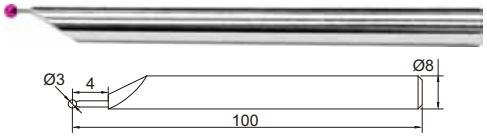

Ø4mm eccentric carbide ball probe(code:**SR4H**)

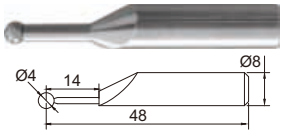

Ø10mm disc probe (code:**DS10H**)

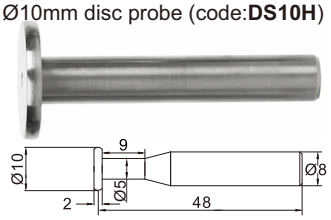

Ø2mm depth probe(code:**DP2H**)

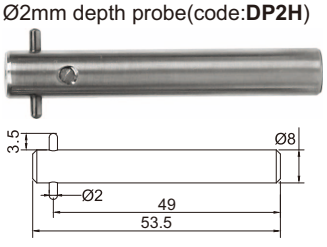

Ø10 carbide ball probe(code:**SR10H**)

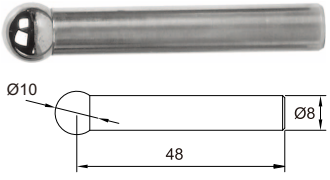

Depth hole probe(code:**DP80H**)

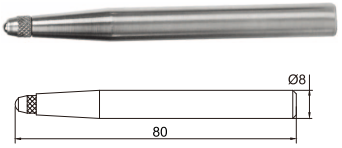

Squareness probe
(Optional, Code:SQ10)



Basic Measurement

- Contacting a plane from above
- Contacting a shaft from above/bore below
- Measuring a shaft diameter and center
- Measuring groove width and center
- Measuring MIN-MAX-DELTA
- Measuring job squareness
- Contacting a plane from below
- Contacting a shaft from below/ bore above
- Measuring bore diameter and center
- Measuring ledge width and center
- Difference key
- Set references

2D Measurement

- Measure pitch circle diameter(PCD)
- Measure distance between two points
- Measure angles
- Preset coordinates

Programming and replay, for batch quantities measurements

Calculation

- Calculate height difference
- Calculate height center

SPECIFICATION

Code	AccuGage700	AccuGage1000
Range	0-700mm	0-1000mm
Expandable range	1015mm	1315mm
Squareness	6μm	10μm
Resolutions	0.5μm, 1μm	
Accuracy	2+L/330μm, L is measuring length in mm (working temperature is 20±1°C)	
Repeatability (with standard probe)	0.001 mm on plane and 0.002 mm on bore	
Measuring force	1±0.2N	
Output	USB or Rs232	
Power supply	Rechargable battery	
Working temperature	10°C - 40°C	
Weight	25kg	

INCLUDED ACCESSORIES

Main unit	1pc
Ø2x48mm ruby ball probe	1pc
Calibration block	1pc
Software and USB cable	Ipc each
Allen key	1set
AC/DC Adapter	1pc

Application Demo

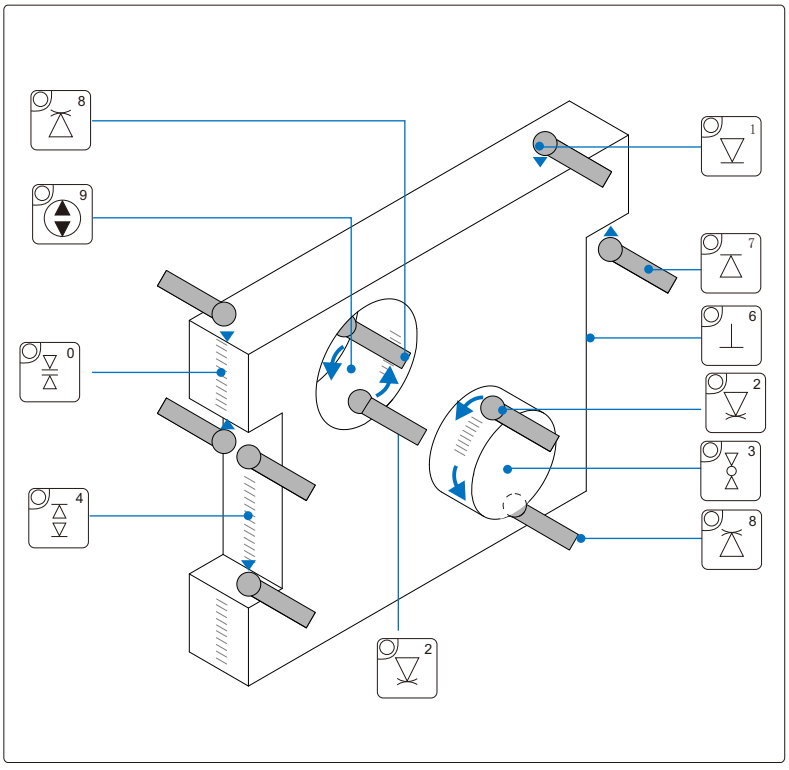

AccuHite700/1000 1D HEIGHT GAGE

Certificate

- The instrument is only suitable for One-Dimensional measurement
- The probe moves up and down automatically
- Low and high limits with judgement
- Built-in air compressor provides smooth movement on granite surface plate.
- With re-chargeable battery, for 10 hours working
- With manufacturer inspection certificate

VIDEO



AccuHite700

Optional Accessories

unit: mm

Ø1mm concentric ruby ball probe(code:**R1HC**)

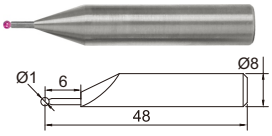

Ø2mm eccentric ruby ball probe(code:**R2H**)

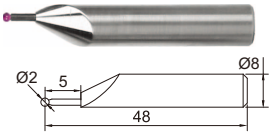

Ø3mm eccentric ruby ball probe(code:**R3H100**)

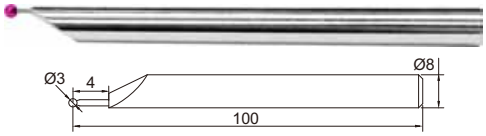

Ø10mm disc probe (code:**DS10H**)

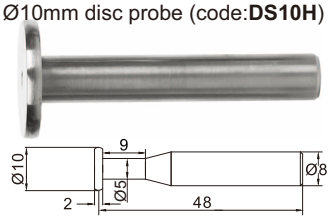

Ø2mm depth probe(code:**DP2H**)

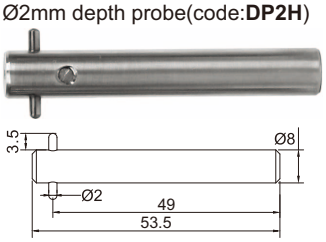

Ø10 carbide ball probe(code:**SR10H**)

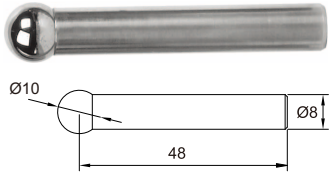

Depth hole probe(code:**DP80H**)

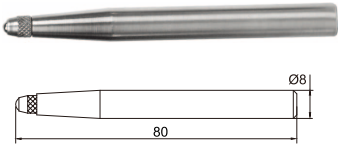

Ø4mm carbide ball probe

Squareness probe
(Optional, Code:SQ10)



Basic Measurement

- Contacting a plane from above
- Contacting a shaft from above/bore below
- Measuring a shaft diameter and center
- Measuring groove width and center
- Contacting a plane from below
- Contacting a shaft from below/ bore above
- Measuring bore diameter and center
- Measuring ledge width and center
- Measuring MIN-MAX-DELTA
- Difference key
- Measuring job squareness
- Set references

SPECIFICATION

Code	AccuHite700	AccuHite1000
Range	0-700mm	0-1000mm
Expandable range	1015mm	1315mm
Squareness	10μm	12μm
Resolutions	0.5μm, 1μm, 10μm	
Accuracy	3+L/250μm, L is measuring length in mm (working temperature is 20±1°C)	
Repeatability (with standard probe)	0.0015 mm on plane and 0.003 mm on bore	
Measuring force	1±0.2N	
Output	USB or RS232	
Power supply	Rechargable battery	
Working temperature	10°C - 40°C	
Weight	21kg	

INCLUDED ACCESSORIES

Main unit	1pc
Ø4x48mm carbide ball probe	1pc
Calibration block	1pc
Software and USB cable	1pc each
Allen key	1set
AC/DC Adapter	1pc

Demo Application

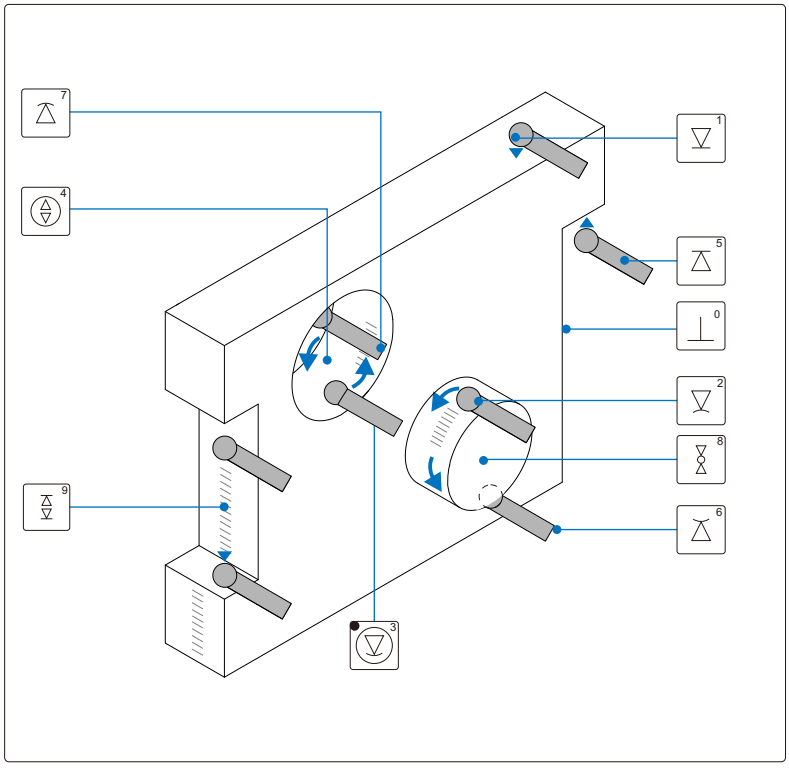

SERIES 181 DIGITAL HEIGHT GAGE

Data output

LR44

- Resolution: 0.01mm/0.0005"
- Buttons: on/off, inch/mm,ABS/INC ,data hold, tolerance measurement, data preset, set data
- Carbide tipped scriber
- Made of stainless steel (except the base)
- Data output(cable code:100-03L or 100-04L)
- With clamps (Ø8mm holder)



181-024-11

Clamp (included)



Carbide tipped jaws



unit: mm

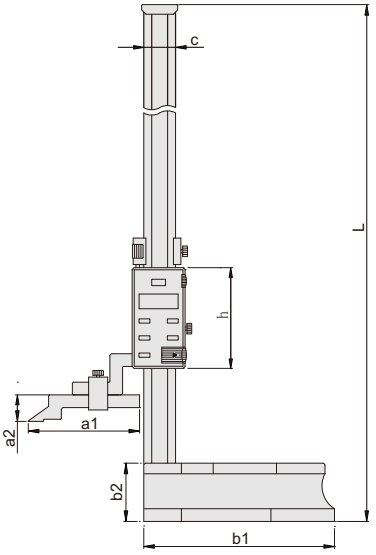

type A

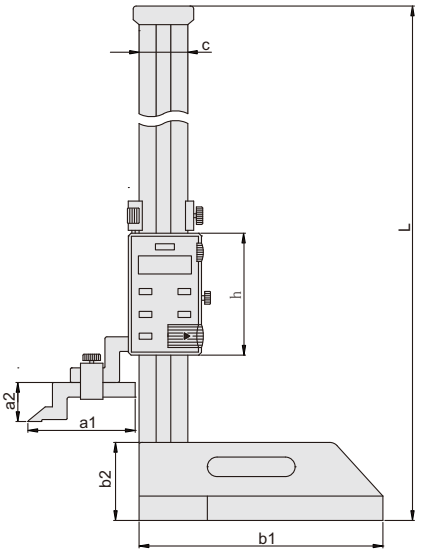

type B

Application with clamps**(optional)**



with series 222 | with series 261

Code	Range	Accuracy	Type	a1	a2	b1	b2	c	h	L
181-012-11	0-300mm/0-12"	±0.04mm	A	76	25	135	45	23	80	470
181-020-11	0-500mm/0-20"	±0.05mm	A	103	25	180	55	30	95	720
181-024-11	0-600mm/0-24"	±0.05mm	A	103	25	180	55	30	95	820
181-040-11	0-1000mm/0-40"	±0.07mm	B	110	39	250	80	50	125	1275
181-060-11	0-1500mm/0-60"	±0.11mm	B	110	39	280	80	50	125	1790
181-080-11	0-2000mm/0-80"	±0.15mm	B	110	39	280	80	50	125	2290

SERIES 184 DIGITAL HEIGHT GAGE WITH DRIVING WHEEL

CR2032

- Buttons: on/off, zero, mm/inch, ABS/INC, hold
- Automatic power off, move the digital unit to turn on power
- Carbide tipped scriber
- Made of stainless steel
- Data output(cable code:100-15)
- Optional accessories: dial test indicator holder (267-050-01)

Application with clamps**(optional)**

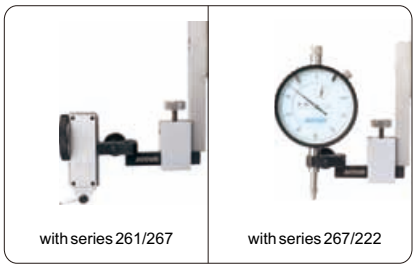

Carbide tipped jaws





184-012-11

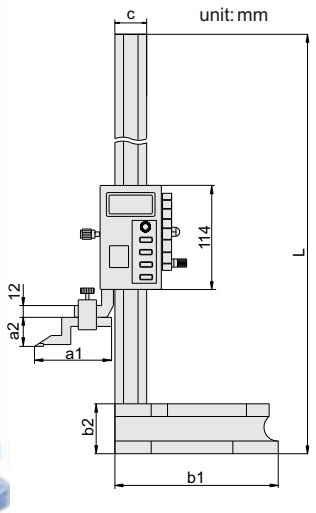

Code	Range	Accuracy	Resolution	b1	b2	L	c	a1	a2	E
184-012-11	0-300mm/0-12"	±0.03mm	0.01mm/0.0005"	180	55	515	32	80	30	9
184-024-11	0-600mm/0-24"	±0.05mm	0.01mm/0.0005"	180	55	815	32	80	30	9
184-040-11	0-1000mm/0-40"	±0.07mm	0.01mm/0.001"	265	70	1220	40	92	48	12

Scriber (included)

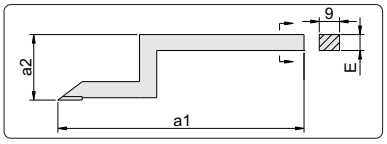

SERIES 184 DIGITAL HEIGHT GAGE WITH DRIVING WHEEL

Data output

CR2032

- Buttons: OFF, mm/inch, ON/ZERO, ADD+, SUB-
- Automatic power off
- Carbide tipped scriber
- Made of stainless steel
- Data output
- Optional accessories: dial test indicator holder (**267-050-01**)

Application with clamps**(optional)**



Carbide tipped jaws





184-024-11P

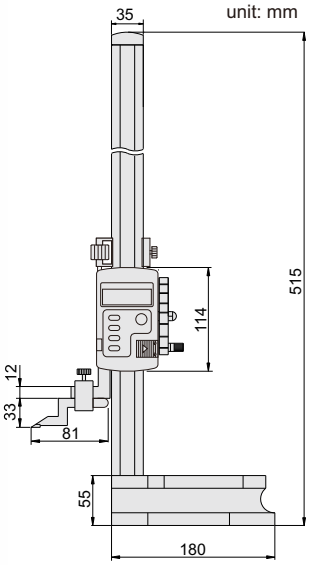

Code	Range	Accuracy	Resolution
184-012-11P	0-300mm/0-12"	±0.03mm	0.01mm/0.0005"
184-024-11P	0-600mm/0-24"	±0.05mm	0.01mm/0.0005"

Scriber **(included)**

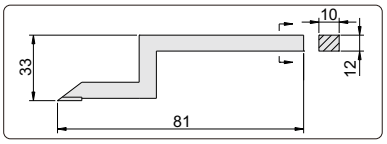

SERIES 182 DIGITAL HEIGHT GAGE

LR44

- Resolution: 0.01mm/0.001"
- Buttons: on/off, inch/mm, ABS/INC, data preset, set data
- Carbide tipped scriber
- Made of stainless steel beam
- With driving wheel
- Optional accessory: 267 series clamps

Application with clamps**(optional)**

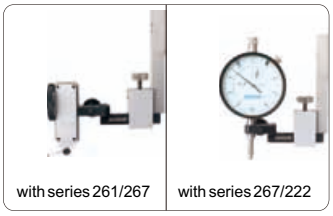



182-012-11

unit: mm

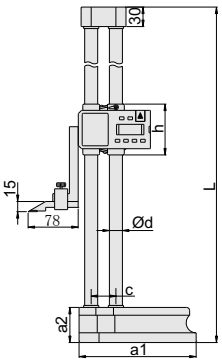

type A

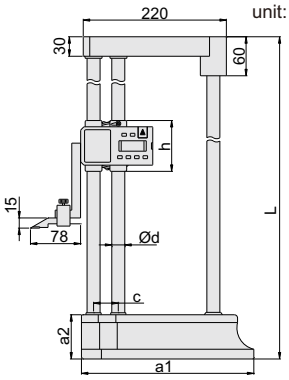

type B

Carbide tipped jaws



Scriber (included)

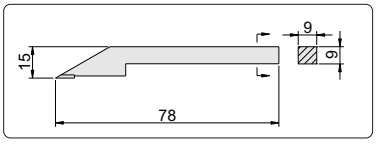

Code	Range	Accuracy	Type	a1	a2	c	Ød	h	L
182-012-11	0-300mm/0-12"	±0.04mm	A	135	43	33	15	84	475
182-018-11	0-450mm/0-18	±0.05mm	A	180	54	38	20	88	660
182-024-11	0-600mm/0-24	±0.05mm	A	180	54	38	20	88	810
182-040-11	0-1000mm/0-40	±0.05mm	B	265	68	38	20	88	1230

Driving wheel

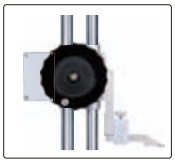

SERIES 185 DIAL HEIGHT GAGE

- Indicator graduation: 0.01mm
- Carbide tipped scriber
- Made of stainless steel (except the base)
- With driving wheel
- Optional accessory: 267 series clamps

Application with clamps**(optional)**

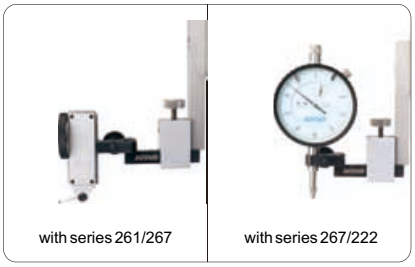



185-012-11

unit: mm

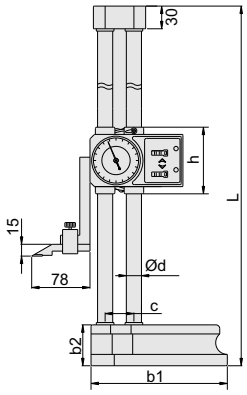

Scriber (included)

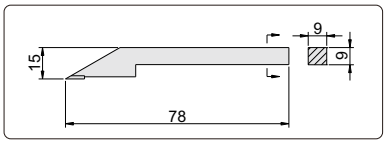

Carbide tipped jaws



Driving wheel

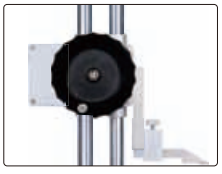

Code	Range	Accuracy	b1	b2	c	Ød	h	L
185-012-11	0-300mm	±0.04mm	135	43	33	15	84	475
185-018-11	0-450mm	±0.05mm	180	54	38	20	88	660
185-024-11	0-600mm	±0.05mm	180	54	38	20	88	810

SERIES 186 VERNIER HEIGHT GAGE

- Graduation: 0.02mm/0.001"
- Move main scale to set zero
- Carbide tipped scriber
- Made of stainless steel (except the base)
- Satin chrome plated scale
- With magnifier
- Optional accessory: 267 series clamps

Application with clamps**(optional)**

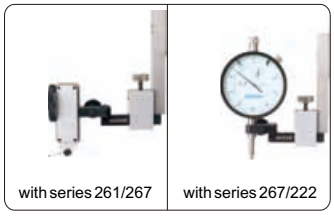



186-012-11

Carbide tipped jaws



unit: mm

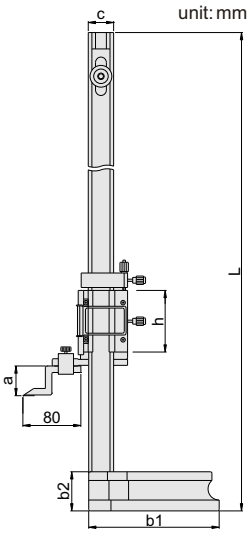

Code	Range	Accuracy	a	b1	b2	c	h	D	E	L
186-012-11	0-300mm/0-12"	±0.04mm	30	135	43	28	75	9	9	545
186-018-11	0-450mm/0-18"	±0.05mm	41	180	54	35	85	9	9	720
186-024-11	0-600mm/0-24"	±0.05mm	41	180	54	35	85	9	9	870
186-040-11	0-1000mm/0-40"	±0.07mm	50	270	70	40	85	10	16	1310

Scriber (included)

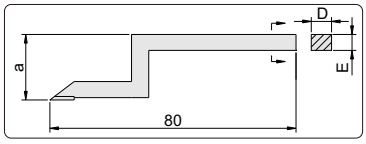

SERIES 186 VERNIER HEIGHT GAGE

- Graduation: 0.02mm/0.001"
- Carbide tipped scriber
- Made of stainless steel (except the base)
- Satin chrome plated scale
- With clamps

Application with clamps**(optional)**





186-008-61P

unit: mm

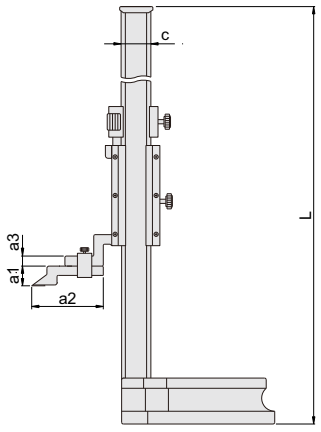

Clamp (included)

unit: mm

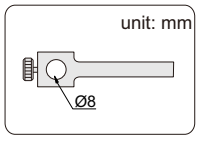

Carbide tipped jaws



Scriber **(included)**

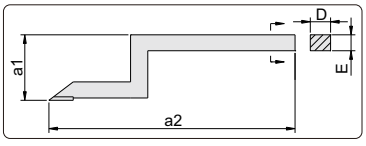

Code	Range	Accuracy	a1	a2	a3	c	D	E	L
186-008-61P	0-200mm/0-8"	±0.03mm	25	76	10	23	6	8	370
186-012-61P	0-300mm/0-12"	±0.04mm	25	76	10	23	6	8	470
186-020-61P	0-500mm/0-20"	±0.05mm	25	105	12	30	10	12	720
186-040-61P	0-1000mm/0-40"	±0.07mm	39	110	15	50	10	15	1275
186-060-61P	0-1500mm/0-60"	±0.11mm	39	110	15	50	10	15	1790
186-080-61P	0-2000mm/0-80"	±0.14mm	39	110	15	50	10	15	2290

SERIES 180 SCRIBER FOR HEIGHT GAGE

- Carbide tipped



180-000-SC1

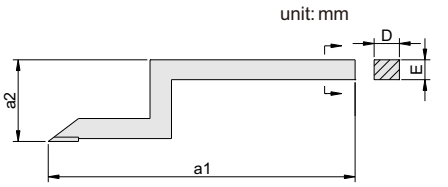

type A

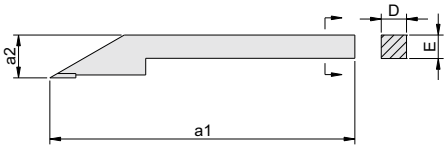

type B

Code	For height gage	Type	a1	a2	D	E
180-000-SC1	181-012-11	A	76	25	6	8
180-000-SC2	181-024-11	A	103	25	10	12
180-000-SC3	181-040-11,181-060-11,181-080-11	A	110	39	10	15
180-000-SC4	185-012-11,185-018-11,185-024-11, 182-012-11,182-018-11,182-024-11	B	78	15	9	9
180-000-SC5	183-006-12, 187-006-12, 187-008-12	B	55	12.5	6	8
180-000-SC6	186-012-11, 184-012-11	A	80	30	9	9
180-000-SC7	186-024-11,186-018-11, 184-024-11	A	80	41	9	9

Carbide tipped jaws



SERIES 183 MINI DIGITAL HEIGHT GAGE

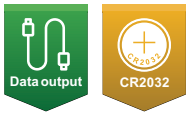

- Resolution: 0.01mm/0.0005"
- Buttons: on/off, zero, mm/in, INC
- Carbide tipped scriber
- Made of stainless steel (except the base)
- Data output(cable code:100-03 or 100-04)
- Automatic power off



183-006-11

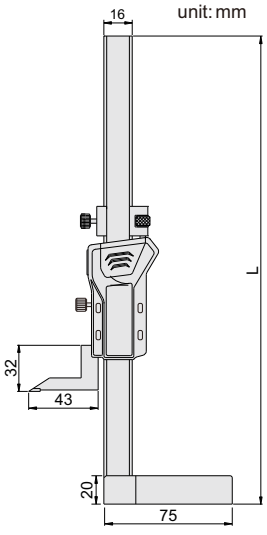

Code	Range	Accuracy	L
183-006-11	0-150mm/0-6"	±0.03mm	265
183-008-11	0-200mm/0-8"	±0.03mm	325
183-010-11	0-250mm/0-10"	±0.03mm	380

Carbide tipped jaws



183 MINI DIGITAL HEIGHT GAGE

Data output

CR2032

- Resolution: 0.01mm/0.0005"
- Buttons: on/off, zero, mm/in, INC
- Carbide tipped scriber
- With fine adjustment
- Made of stainless steel (except the base)
- Data output(cable code:100-03 or 100-04)
- Automatic power off



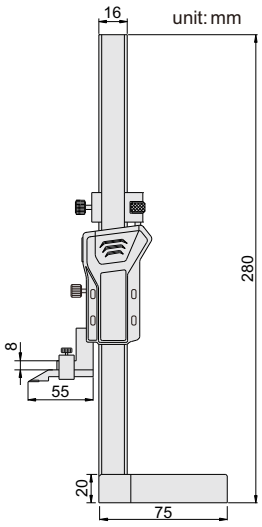

Carbide tipped jaws



Scriber (included)

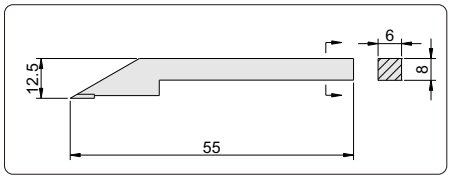

Code	Range	Accuracy
183-006-12	0-150mm/0-6"	±0.03mm

SERIES 187 MINI VERNIER HEIGHT GAGE

- Graduation 0.02mm/0.001"
- Carbide tipped scriber
- Made of stainless steel (except the base)
- Satin chrome plated scale



187-006-12

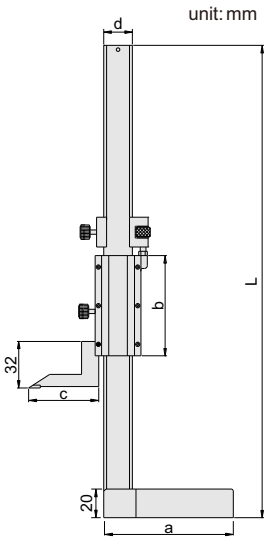

Carbide tipped jaws



Code	Range	Accuracy	a	b	c	d	L
187-006-11	0-150mm/0-6"	±0.03mm	75	57	43	16	265
187-008-11	0-200mm/0-8"	±0.03mm	90	70	49	20	325
187-010-11	0-250mm/0-10"	±0.03mm	90	70	49	20	380

SERIES 187 MINI VERNIER HEIGHT GAGE

- Graduation: 0.02mm/0.001"
- Carbide tipped scriber
- Made of stainless steel (except the base)
- Satin chrome plated scale



187-008-11

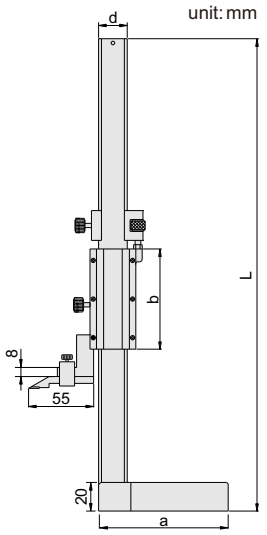

Carbide tipped jaws



Scriber (included)

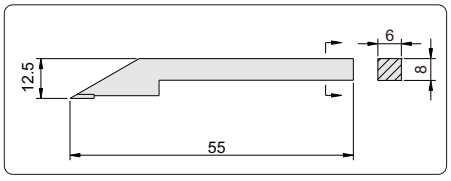

Code	Range	Accuracy	a	b	d	L
187-006-12	0-150mm/0-6"	±0.03mm	75	57	16	280
187-008-12	0-200mm/0-8"	±0.03mm	90	70	20	325

SERIES 189 DIAL HEIGHT GAGE

- Indicator graduation: 0.02mm
- Carbide tipped scriber
- Made of stainless steel
- Double base surface



189-012-11

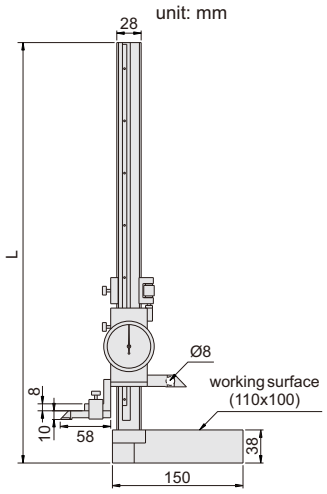

Application



Carbide tipped jaws



Scriber (included)

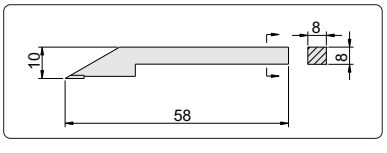

Code	Range	Accuracy	L
189-012-11	0-300mm	±0.04mm	480
189-024-11	0-600mm	±0.05mm	780

SERIES 313 DIGITAL OUTSIDE MICROMETER WITH DATA OUTPUT

Certificate | Data output | IP65



313-001-01S

- IP65 protection level
- Button: on/off, mm/inch,set, zero
- Automatic power off
- Data output
- Carbide measuring faces, ratchet stop
- Setting standards are included(except **313-001-01S**)

unit: mm

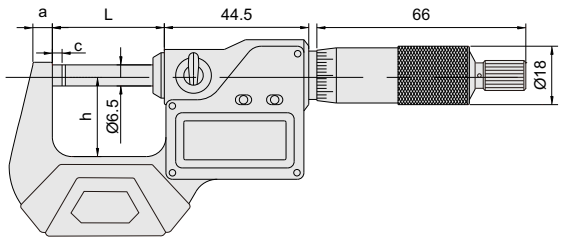

Setting standards (included)



Data output interface





spherical anvil

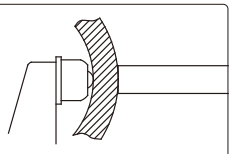

measure tube wall thickness

Code	Range	Resolution	Accuracy	a	c	h	L	Setting standards(included)
313-001-01S*	0-25mm/0-1"	0.001mm/0.00005"	±2μm	6	3	25	34.5	-
313-002-01S*	25-50mm/1-2"	0.001mm/0.00005"	±2μm	8	3	32	59.5	25mm
313-003-01S*	50-75mm/2-3"	0.001mm/0.00005"	±3μm	8	3	44.5	84.5	50mm
313-004-01S*	75-100mm/3-4"	0.001mm/0.00005"	±3μm	8	3	57	109.5	75mm
313-005-01S	100-125mm/4-5"	0.001mm/0.00005"	±3μm	10	3	70	135	100mm
313-006-01S	125-150mm/5-6"	0.001mm/0.00005"	±3μm	10	3	82	160.5	125mm
313-007-01S	150-175mm/6-7"	0.001mm/0.00005"	±4μm	12	5.5	94.5	186	150mm
313-008-01S	175-200mm/7-8"	0.001mm/0.00005"	±4μm	12	5.5	107	211.5	175mm
313-009-01S	200-225mm/8-9"	0.001mm/0.00005"	±4μm	23	5.5	129.5	236	200mm
313-010-01S	225-250mm/9-10"	0.001mm/0.00005"	±4μm	23	5.5	142.5	261.5	225mm
313-011-01S	250-275mm/10-11"	0.001mm/0.0001"	±5μm	23	5.5	155	287	250mm
313-012-01S	275-300mm/11-12"	0.001mm/0.0001"	±5μm	23	5.5	167.5	312.5	275mm

Set

Code	Range	Total QTY.	Included micrometers	Package
313-003-03S*	0-75mm/0-3"	3pcs	0-25mm/0-1", 25-50mm/1-2", 50-75mm/2-3"	blow mould case
313-004-04S*	0-100mm/0-4"	4pcs	0-25mm/0-1", 25-50mm/1-2", 50-75mm/2-3", 75-100mm/3-4"	blow mould case
313-006-06S	0-150mm/0-6"	6pcs	0-25mm/0-1", 25-50mm/1-2", 50-75mm/2-3", 75-100mm/3-4", 100-125mm/4-5", 125-150mm/5-6"	aluminum box

* **With manufacturer inspection certificate**

SERIES 313 DIGITAL OUTSIDE MICROMETER

Certificate IP65



313-001-01

- IP65 protection level
- Button: on/off, mm/inch, set, zero
- Automatic power off
- Carbide measuring faces, ratchet stop
- Setting standards are included (except **313-001-01**)

unit: mm

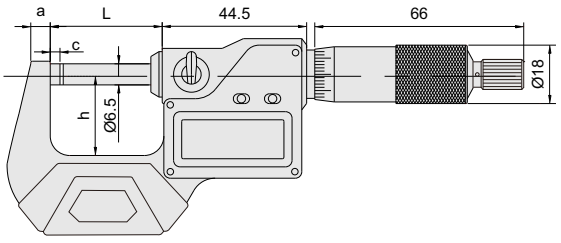

Setting standards (included)



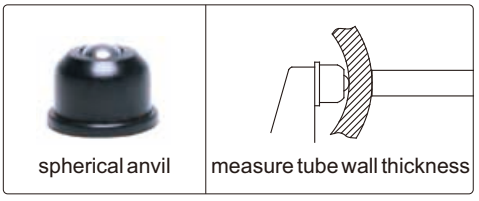

Code	Range	Resolution	Accuracy	a	c	h	L	Setting standards(included)
313-001-01*	0-25mm/0-1"	0.001mm/0.00005"	±2μm	6	3	25	34.5	-
313-002-01*	25-50mm/1-2"	0.001mm/0.00005"	±2μm	8	3	32	59.5	25mm
313-003-01*	50-75mm/2-3"	0.001mm/0.00005"	±3μm	8	3	44.5	84.5	50mm
313-004-01*	75-100mm/3-4"	0.001mm/0.00005"	±3μm	8	3	57	109.5	75mm
313-005-01	100-125mm/4-5"	0.001mm/0.00005"	±3μm	10	3	70	135	100mm
313-006-01	125-150mm/5-6"	0.001mm/0.00005"	±3μm	10	3	82	160.5	125mm
313-007-01	150-175mm/6-7"	0.001mm/0.00005"	±4μm	12	5.5	94.5	186	150mm
313-008-01	175-200mm/7-8"	0.001mm/0.00005"	±4μm	12	5.5	107	211.5	175mm
313-009-01	200-225mm/8-9"	0.001mm/0.00005"	±4μm	23	5.5	129.5	236	200mm
313-010-01	225-250mm/9-10"	0.001mm/0.00005"	±4μm	23	5.5	142.5	261.5	225mm
313-011-01	250-275mm/10-11"	0.001mm/0.0001"	±5μm	23	5.5	155	287	250mm
313-012-01	275-300mm/11-12"	0.001mm/0.0001"	±5μm	23	5.5	167.5	312.5	275mm

Set

Code	Range	Total QTY.	Included micrometers	Package
313-003-03*	0-75mm/0-3"	3pcs	0-25mm/0-1", 25-50mm/1-2", 50-75mm/2-3"	blow mould case
313-004-04*	0-100mm/0-4"	4pcs	0-25mm/0-1", 25-50mm/1-2", 50-75mm/2-3", 75-100mm/3-4"	blow mould case
313-006-06	0-150mm/0-6"	6pcs	0-25mm/0-1", 25-50mm/1-2", 50-75mm/2-3", 75-100mm/3-4", 100-125mm/4-5", 125-150mm/5-6"	aluminum box

* **With manufacturer inspection certificate**

SERIES 312 DIGITAL OUTSIDE MICROMETER

Certificate



312-001-03

unit: mm

- Resolution: 0.001mm/0.00005"
- Button: ON/OFF/SET, ABS/INC/UNIT
- Carbide measuring faces
- Ratchet stop
- Setting standards are included (except **312-001-03**)

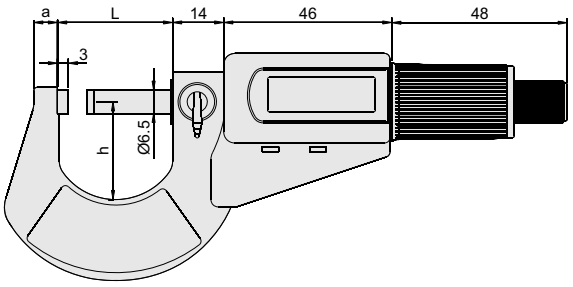

Setting standards (included)



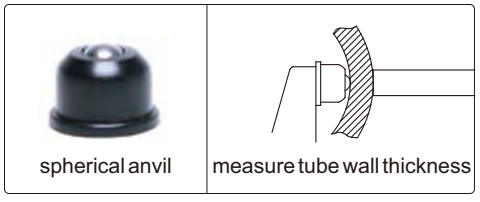

Code	Range	Accuracy	a	h	L	Setting standards(included)
312-001-03*	0-25mm/0-1"	±2μm	6	27.5	32	-
312-002-03*	25-50mm/1-2"	±2μm	8	37	57	25mm
312-003-03*	50-75mm/2-3"	±3μm	8	50	82	50mm
312-004-03*	75-100mm/3-4"	±3μm	10	61	107	75mm
312-005-03	100-125mm/4-5"	±3μm	10	73	132	100mm
312-006-03	125-150mm/5-6"	±3μm	10	85	157	125mm
312-007-03	150-175mm/6-7"	±4μm	21	104	182	150mm
312-008-03	175-200mm/7-8"	±4μm	21	117	207	175mm

Set

Code	Range	Total QTY.	Included micrometers	Package
312-003-33*	0-75mm/0-3"	3pcs	0-25mm/0-1", 25-50mm/1-2", 50-75mm/2-3"	blow mould case
312-004-44*	0-100mm/0-4"	4pcs	0-25mm/0-1", 25-50mm/1-2", 50-75mm/2-3", 75-100mm/3-4"	blow mould case
312-006-66	0-150mm/0-6"	6pcs	0-25mm/0-1", 25-50mm/1-2", 50-75mm/2-3", 75-100mm/3-4", 100-125mm/4-5", 125-150mm/5-6"	aluminum box

* **With manufacturer inspection certificate**

SERIES 303 QUICK FEEDING DIGITAL OUTSIDE MICROMETER

Certificate | Data output | IP65



303-001-21

- 2mm feeding of each turn
- IP65 dust/waterproof
- Automatic power off
- Button function: on/off, set, mm/inch, data transmission
- Carbide measuring faces, friction thimble
- Supplied with spherical anvil
- Supplied with setting standards (except 0-25mm/0-1")
- Data output

unit: mm

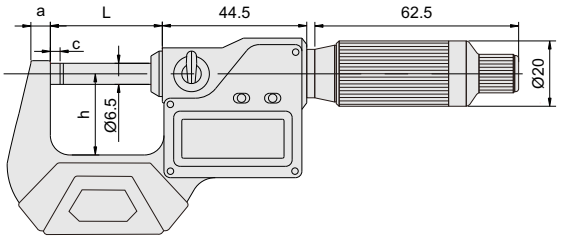

Setting standards (included)



Data output interface



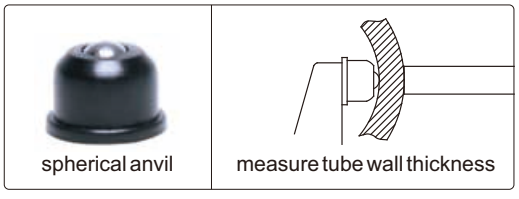

Code	Range	Resolution	Accuracy	a	c	h	L	Setting standards(included)
303-001-21 *	0-25mm/0-1"	0.001mm/0.00005"	±2μm	6	3	25	34.5	-
303-002-21 *	25-50mm/1-2"	0.001mm/0.00005"	±2μm	8	3	32	59.5	25mm
303-003-21 *	50-75mm/2-3"	0.001mm/0.00005"	±3μm	8	3	44.5	84.5	50mm
303-004-21 *	75-100mm/3-4"	0.001mm/0.00005"	±3μm	8	3	57	109.5	75mm
303-005-21	100-125mm/4-5"	0.001mm/0.00005"	±3μm	10	3	70	135	100mm
303-006-21	125-150mm/5-6"	0.001mm/0.00005"	±3μm	10	3	82	160.5	125mm
303-007-21	150-175mm/6-7"	0.001mm/0.00005"	±4μm	12	5.5	94.5	186	150mm
303-008-21	175-200mm/7-8"	0.001mm/0.00005"	±4μm	12	5.5	107	211.5	175mm
303-009-21	200-225mm/8-9"	0.001mm/0.00005"	±4μm	23	5.5	129.5	236	200mm
303-010-21	225-250mm/9-10"	0.001mm/0.00005"	±4μm	23	5.5	142.5	261.5	225mm
303-011-21	250-275mm/10-11"	0.001mm/0.00005"	±5μm	23	5.5	155	287	250mm
303-012-21	275-300mm/11-12"	0.001mm/0.00005"	±5μm	23	5.5	167.5	312.5	275mm

* **With manufacturer inspection certificate**

SERIES 314 DIGITAL SNAP MICROMETER

Data output | IP65 | CR2032

- Quick measurement with lever
- Resolution: 0.001mm/0.00005"
- IP65 protection level
- Button: on/off, mm/inch, origin, ABS/zero
- Automatic power off
- Carbide measuring faces
- Setting standards are included (except **314-001-02**)



314-001-02

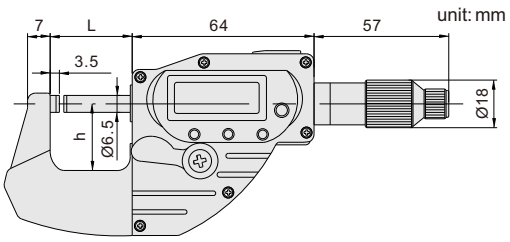

Code	Range	Accuracy	h	L	Setting standards (included)
314-001-02	0-25mm/0-1"	3μm	25	31	-
314-002-02	25-50mm/1-2"	3μm	32	57	25mm
314-003-02	50-75mm/2-3"	4μm	44.5	82	50mm
314-004-02	75-100mm/3-4"	4μm	57	107	75mm

Setting standards (included)



Quick movement



SERIES 390 OUTSIDE MICROMETER WITH COUNTER

Certificate

- Counter resolution: 0.01mm
- Thimble graduation: 0.01mm
- Carbide measuring faces
- Meet DIN863-1
- Ratchet stop
- Setting standards are included (except 0-25mm)



390-001-01

Code	Range	Accuracy	a	h	L	Setting standards (included)
390-001-01*	0-25mm	4μm	6	26	32	-
390-002-01*	25-50mm	4μm	8	32	57	25mm
390-003-01*	50-75mm	5μm	8	44.5	82	50mm
390-004-01*	75-100mm	5μm	8	57	107	75mm
390-005-01	100-125mm	6μm	17	71.5	132.5	100mm
390-006-01	125-150mm	6μm	17	84	157.5	125mm
390-007-01	150-175mm	7μm	20	98.5	185	150mm
390-008-01	175-200mm	7μm	20	111	210.5	175mm
390-009-01	200-225mm	8μm	20	124	236	200mm
390-010-01	225-250mm	8μm	20	136.5	261	225mm
390-011-01	250-275mm	9μm	20	149	287	250mm
390-012-01	275-300mm	9μm	20	162	312	275mm

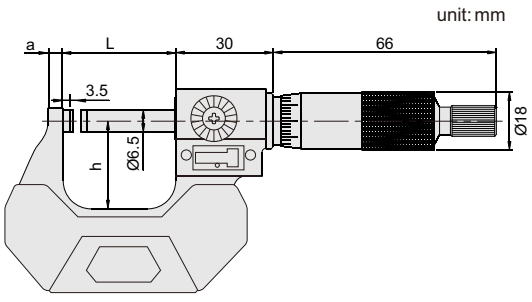

Setting standards (included)



* **With manufacturer inspection certificate**

SERIES 321 OUTSIDE MICROMETER

Certificate

- Graduation: 0.01mm
- Carbide measuring faces
- Ratchet stop
- Setting standards are included (except **321-001-01**)



321-001-01

Setting standards(included)



unit: mm

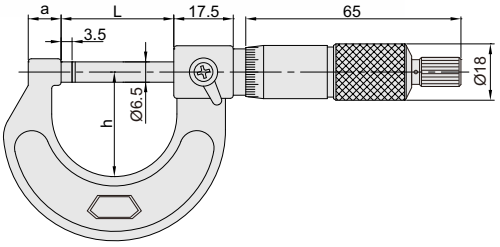

Code	Range	Accuracy	a	h	L	Setting standards (included)
321-001-01*	0-25mm	4μm	9	29	32	-
321-002-01*	25-50mm	4μm	14	39	57	25mm
321-003-01*	50-75mm	5μm	15	49	82	50mm
321-004-01*	75-100mm	5μm	15	60	107	75mm
321-005-01	100-125mm	6μm	17	73	133	100mm
321-006-01	125-150mm	6μm	17	85	158	125mm
321-007-01	150-175mm	7μm	20	101	183	150mm
321-008-01	175-200mm	7μm	20	114	209	175mm
321-009-01	200-225mm	8μm	20	126	234	200mm
321-010-01	225-250mm	8μm	20	139	260	225mm
321-011-01	250-275mm	9μm	20	151	285	250mm
321-012-01	275-300mm	9μm	20	164	310	275mm



321-004-04



321-012-06

Code	Range	Total QTY.	Included micrometers	Setting standards(included)	Package
321-003-03*	0-75mm	3pcs	0-25, 25-50, 50-75mm	25, 50mm	blow mould case
321-004-04*	0-100mm	4pcs	0-25, 25-50, 50-75, 75-100mm	25, 50, 75mm	blow mould case
321-006-06	0-150mm	6pcs	0-25, 25-50, 50-75,75-100, 100-125, 125-150mm	25, 50, 75, 100, 125mm	blow mould case
321-012-06	150-300mm	6pcs	150-175, 175-200, 200-225, 225-250, 250-275, 275-300mm	150,1 75, 200, 225, 250, 275mm	aluminum box
321-012-12	0-300mm	12pcs	0-25, 25-50, 50-75,75-100, 100-125, 125-150, 150-175, 175-200, 200-225, 225-250, 250-275, 275-300mm	25, 50, 75, 100, 125,150, 1 75, 200, 225, 250, 275mm	aluminum box

* **With manufacturer inspection certificate**

SERIES 322 MICRO GRADUATION OUTSIDE MICROMETER

Certificate

- Graduation: 0.001mm
- Carbide measuring faces
- Ratchet stop
- Setting standards are included (except **322-001-01**)

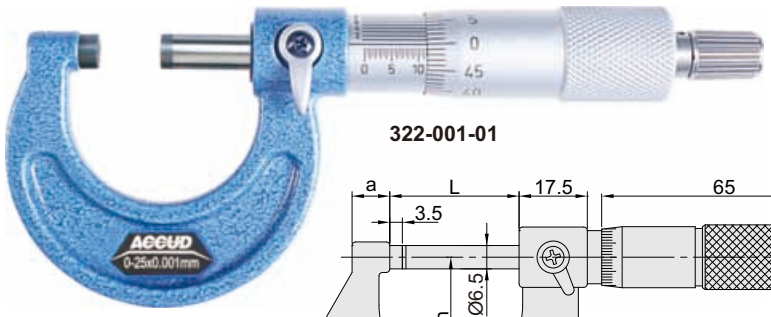

322-001-01

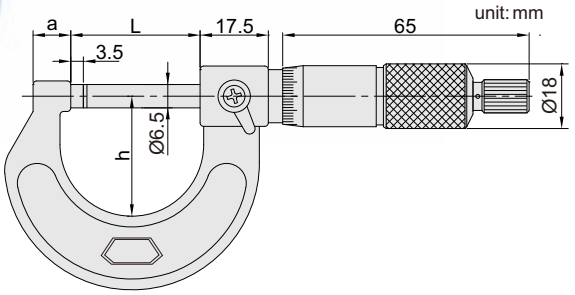

unit: mm

Code	Range	Accuracy	a	h	L	Setting standards(included)
322-001-01*	0-25mm	4μm	9	29	32	-
322-002-01*	25-50mm	4μm	9	39	58	25mm
322-003-01*	50-75mm	5μm	10	53	83	50mm
322-004-01*	75-100mm	5μm	10	65	109	75mm
322-005-01	100-125mm	6μm	11.5	76	133	100mm
322-006-01	125-150mm	6μm	11.5	88	159	125mm
322-007-01	150-175mm	7μm	11.5	101	185	150mm
322-008-01	175-200mm	7μm	11.5	114	210	175mm

Setting standards (included)



* **With manufacturer inspection certificate**

SERIES 323 OUTSIDE MICROMETER

Certificate

- Graduation 0.01mm
- Carbide measuring faces
- Meet DIN863-1
- Supplied with setting standards (except 0-25mm)

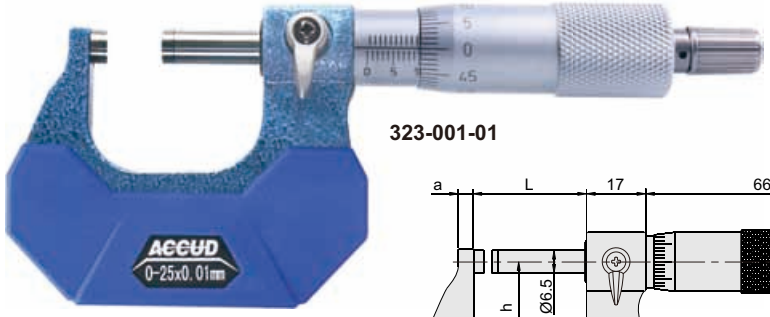

323-001-01

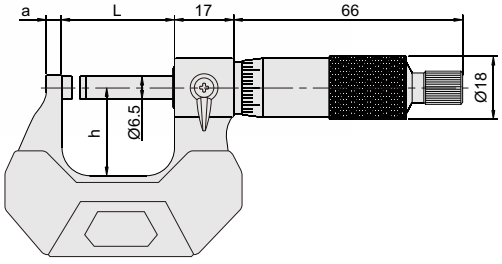

unit: mm

Code	Range	Accuracy	a	h	L	Setting standards(included)
323-001-01*	0-25mm	4μm	6	24	32	-
323-002-01*	25-50mm	4μm	8	32	57	25mm
323-003-01*	50-75mm	5μm	8	45	82	50mm
323-004-01*	75-100mm	5μm	8	57	107	75mm
323-005-01	100-125mm	6μm	8	70	133	100mm
323-006-01	125-150mm	6μm	8	82	125	125mm
323-007-01	150-175mm	7μm	8	95	183	150mm
323-008-01	175-200mm	7μm	8	107	209	175mm

Setting standards (included)



Set

Code	Range	Total QTY.	Included micrometers
323-003-03*	0-75mm	3pcs	0-25mm, 25-50mm/, 50-75mm
323-004-04*	0-100mm	4pcs	0-25mm, 25-50mm, 50-75mm, 75-100mm
323-006-06	0-150mm	6pcs	0-25mm, 25-50mm, 50-75mm, 75-100mm, 100-125mm, 125-150mm

* **With manufacturer inspection certificate**

SERIES 324 OUTSIDE MICROMETER

Certificate

- Graduation: 0.0001"
- Carbide measuring faces
- Ratchet stop
- Setting standards are included (except **324-001-01**)



324-003-01

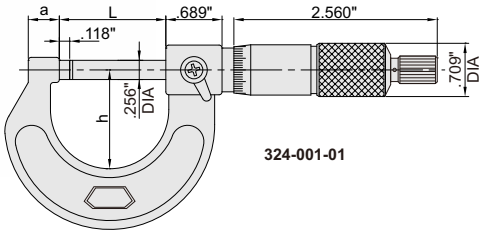

324-001-01

Code	Range	Accuracy	a	h	L	Setting standards (included)
324-001-01*	0-1"	±.0001"	.354"	1.102"	1.260"	-
324-002-01*	1-2"	±.0001"	.551"	1.496"	2.244"	1"
324-003-01*	2-3"	±.0001"	.591"	1.929"	3.228"	2"
324-004-01*	3-4"	±.00015"	.591"	2.362"	4.213"	3"
324-005-01*	4-5"	±.00015"	.650"	2.874"	5.236"	4"
324-006-01*	5-6"	±.00015"	.650"	3.346"	6.220"	5"
324-007-01	6-7"	±.0002"	.764"	4.094"	7.205"	6"
324-008-01	7-8"	±.0002"	.764"	4.606"	8.228"	7"
324-009-01	8-9"	±.0002"	.764"	5.118"	9.213"	8"
324-010-01	9-10"	±.00025"	.764"	5.591"	10.236"	9"
324-011-01	10-11"	±.00025"	.764"	6.102"	11.220"	10"
324-012-01	11-12"	±.00025"	.764"	6.614"	12.205"	11"

Setting standards (included)





324-006-06



324-012-06

MICROMETER SET

Code	Range	Total quantity	Included micrometers	Setting standards(included)	Package
324-003-03*	0-3"	3pcs	0-1", 1-2", 2-3"	1", 2"	blow mould case
324-004-04*	0-4"	4pcs	0-1", 1-2", 2-3", 3-4"	1", 2", 3"	blow mould case
324-006-06*	0-6"	6pcs	0-1", 1-2", 2-3",3-4", 4-5", 5-6"	1",2", 3",4", 5"	blow mould case
324-012-06	6-12"	6pcs	6-7", 7-8", 8-9", 9-10", 10-11",11-12"	6",7", 8", 9", 10", 11"	aluminum box
324-012-12	0-12"	12pcs	0-1", 1-2", 2-3",3-4", 4-5", 5-6", 6-7", 7-8", 8-9", 9-10", 10-11",11-12"	1", 2", 3",4", 5", 6", 7", 8", 9", 10", 11"	aluminum box

* **With manufacturer inspection certificate**

320 MINI OUTSIDE MICROMETER

- Chrome plated frame
- Pocket size, easy to carry



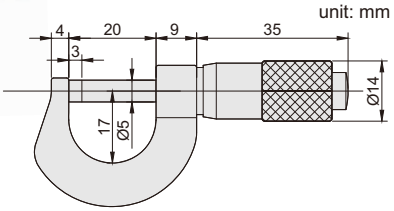

Code	Range	Graduation
320-015-01	0-15mm	0.01mm

SERIES 315 DIGITAL MICROMETER WITH INTERCHANGEABLE ANVILS

IP65 Data output

- Resolution 0.001mm/0.0001" (resolution of **315-004-01** and **315-006-01** is 0.001mm/0.00005")
- IP65 protection level
- Button: on/off, set, mm/inch, ABS/INC, data output
- Automatic power off
- Data output
- Ratchet stop
- Carbide measuring faces
- Supplied with setting standards



315-004-01



315-020-01

Setting standards **(included)**





interchangeable anvils
for different measuring ranges

unit: mm

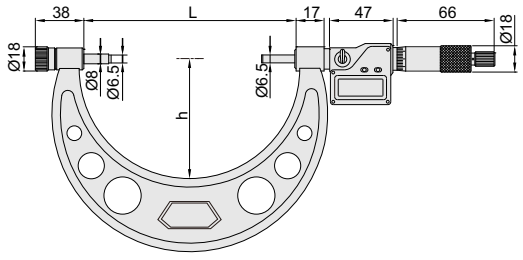

type A

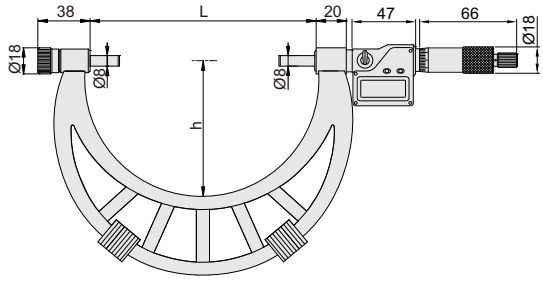

type B

Code	Range	Accuracy	Type	L	h	Setting standards (included)
315-004-01	0-100mm/0-4"	±5μm	A	105	57	25,50,75mm
315-006-01	0-150mm/0-6"	±6μm	A	155	82	25,50,75,100,125mm
315-012-01	150-300mm/6-12"	±8μm	A	305	165	150,175,200,225,250,275mm
315-012-02	200-300mm/8-12"	±8μm	A	305	165	200,225,250,275mm
315-016-01	300-400mm/12-16"	±9μm	B	405	224	325,375mm
315-020-01	400-500mm/16-20"	±11μm	B	505	275	425,475mm
315-024-01	500-600mm/20-24"	±12μm	B	605	321	525,575mm
315-028-01	600-700mm/24-28"	±13μm	B	705	371	625,675mm
315-032-01	700-800mm/28-32"	±15μm	B	805	426	725,775mm
315-036-01	800-900mm/32-36"	±16μm	B	905	476	825,875mm
315-040-01	900-1000mm/36-40"	±17μm	B	1005	576	925,975mm

SERIES 325 OUTSIDE MICROMETER WITH INTERCHANGEABLE ANVILS

- Graduation: 0.01mm
- Ratchet stop
- Carbide measuring faces
- Supplied with setting standards



325-006-01

unit: mm

Setting standards **(included)**



Interchangeable anvils **(included)**

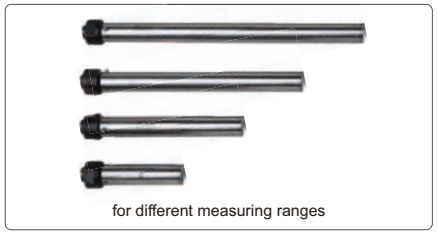

for different measuring ranges

type A

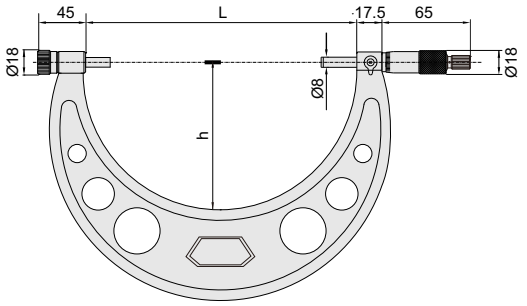

type B

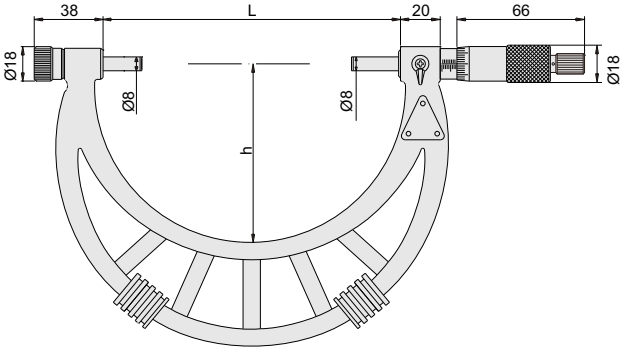

Code	Range	Accuracy	Type	L	h	Setting standards(included)
325-002-01	0-50mm	4μm	A	58	35	25mm
325-004-01	0-100mm	5μm	A	108	57	25,50,75mm
325-006-01	0-150mm	6μm	A	158	82	25,50,75,100,125mm
325-008-01	100-200mm	7μm	A	208	114	100,125,150,175mm
325-012-01	150-300mm	9μm	A	308	165	150,175,200,225,250,275mm
325-006-02	50-150mm	6μm	A	158	82	50,75,100,125mm
325-012-02	200-300mm	9μm	A	308	165	200,225,250,275mm
325-016-02	300-400mm	11μm	B	409	224	325,375mm
325-020-02	400-500mm	13μm	B	509	275	425,475mm
325-024-02	500-600mm	14μm	B	609	321	525,575mm
325-028-02	600-700mm	16μm	B	709	371	625,675mm
325-032-02	700-800mm	18μm	B	809	426	725,775mm
325-036-02	800-900mm	20μm	B	909	476	825,875mm
325-040-02	900-1000mm	22μm	B	1009	576	925,975mm

SERIES 325 OUTSIDE MICROMETER WITH INTERCHANGEABLE ANVILS

- Graduation: .0001" (within 12")
  .001" (over 12")
- Ratchet stop
- Carbide measuring faces
- Supplied with setting standards



325-006-E01

Setting standards **(included)**



Interchangeable anvils **(included)**

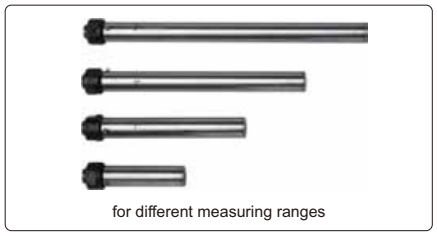

for different measuring ranges

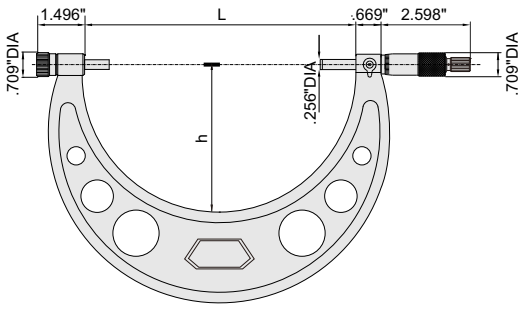

type A

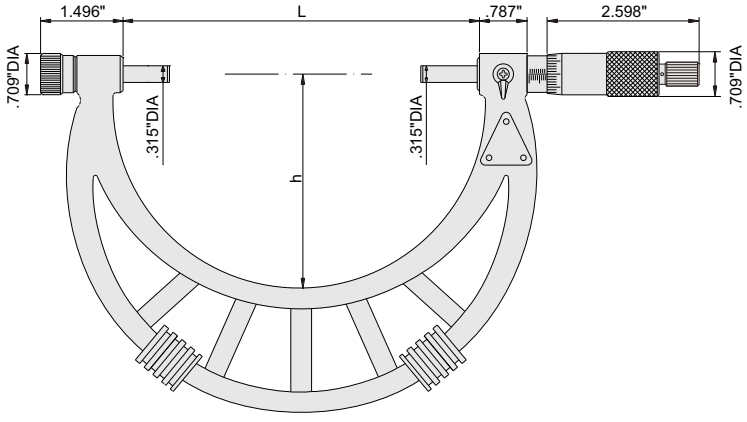

type B

Code	Range	Accuracy	Type	L	h	Setting standards (included)
325-002-E01	0-2"	.00015"	A	2.283"	1.378"	1"
325-004-E01	0-4"	.00020"	A	4.252"	2.244"	1", 2", 3"
325-006-E01	0-6"	.00025"	A	6.220"	3.228"	1", 2", 3", 4", 5"
325-008-E01	4-8"	.00030"	A	8.189"	4.488"	4", 5", 6", 7"
325-012-E01	6-12"	.00035"	A	12.126"	6.496"	6", 7", 8", 9", 10", 11"
325-016-E02	12-16"	.00045"	B	16.102"	8.819"	13", 15"
325-020-E02	16-20"	.00050"	B	20.039"	10.827"	17", 19"
325-024-E02	20-24"	.00055"	B	23.976"	12.638"	21", 23"
325-028-E02	24-28"	.00065"	B	27.913"	14.606"	25", 27"
325-032-E02	28-32"	.00070"	B	31.850"	16.772"	29", 31"
325-036-E02	32-36"	.00080"	B	35.787"	18.740"	33", 35"
325-040-E02	36-40"	.00085"	B	39.724"	22.677"	37", 39"

SERIES 329 OUTSIDE MICROMETER WITH EXTENSION ANVIL

- Adjust collars for different measuring ranges
- Graduation 0.01mm
- Ratchet stop
- Carbide measuring faces
- Supplied with setting standards



329-016-01

Adjust collars for different measuring ranges

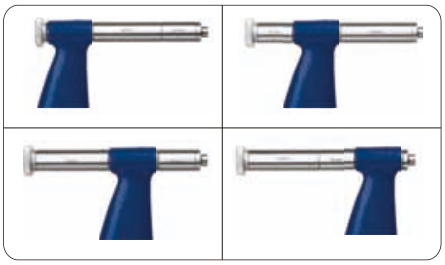

unit: mm

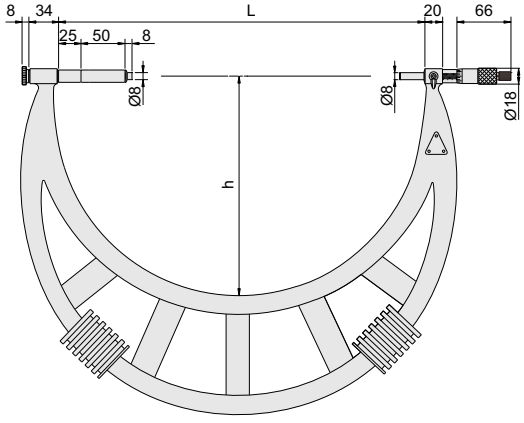

Type A

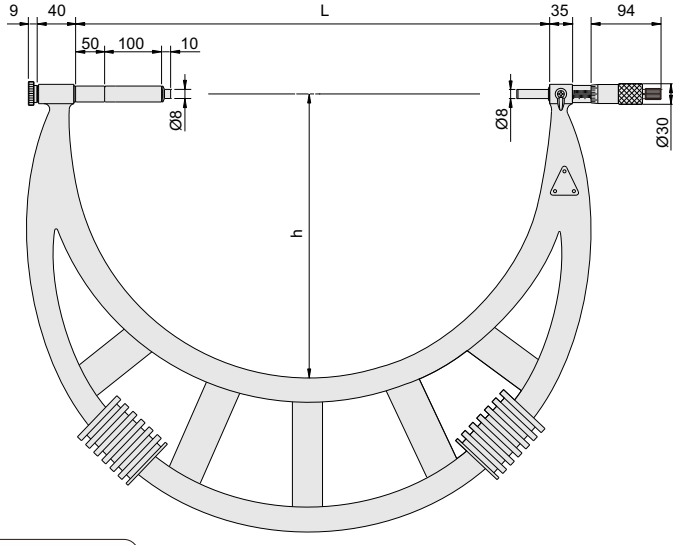

Type B

Setting standards(included)



Code	Range	Accuracy	Type	L	h	Setting standards(included)
329-016-01	300-400mm	11μm	A	410	250	325,375mm
329-020-01	400-500mm	13μm	A	510	275	425,475mm
329-024-01	500-600mm	14μm	A	610	320	525,575mm
329-028-01	600-700mm	16μm	A	710	370	625,675mm
329-032-01	700-800mm	18μm	A	810	425	725,775mm
329-036-01	800-900mm	20μm	A	910	475	825,875mm
329-040-01	900-1000mm	22μm	A	1010	575	925,975mm
329-048-01	1000-1200mm	22μm	B	1210	645	1050,1150mm
329-056-01	1200-1400mm	24μm	B	1410	745	1250,1350mm
329-064-01	1400-1600mm	28μm	B	1610	845	1450,1550mm
329-072-01	1600-1800mm	31μm	B	1810	945	1650,1750mm
329-080-01	1800-2000mm	34μm	B	2010	1045	1850,1950mm

SERIES 430 MICROMETER WITH DIAL INDICATOR



430-012-01

- Meet DIN863-3
- Graduation 0.01 mm
- Ratchet stop
- Carbide measuring faces
- Supplied with setting standards
- Optional accessory: dial indicators or digital indicators

unit: mm

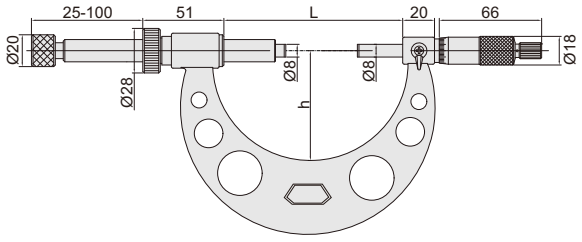

Type A

Optional indicators(optional)



211-010-13 **222-010-11**

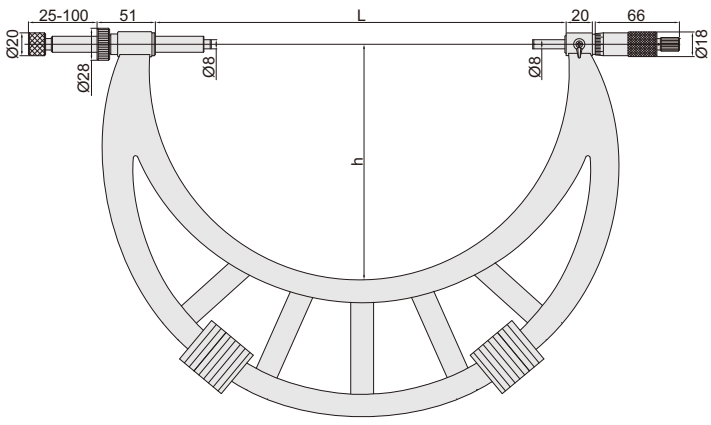

Type B

Code	Range	Accuracy	Type	L	h
430-004-01	0-100mm	6μm	A	115	68
430-008-01	100-200mm	7μm	A	215	120
430-012-01	200-300mm	8μm	A	315	170
430-016-01	300-400mm	9μm	B	415	225
430-020-01	400-500mm	10μm	B	515	275
430-024-01	500-600mm	11μm	B	615	325
430-028-01	600-700mm	12μm	B	715	375
430-032-01	700-800mm	13μm	B	815	430
430-036-01	800-900mm	14μm	B	915	480
430-040-01	900-1000mm	15μm	B	1015	530

Setting standards(included)



SERIES 388

DIGITAL GEAR ROOT DIAMETER MICROMETER

IP65 Data output

- Measure diameter of gear root circle
- Resolution 0.001mm/0.0001" (resolution of **388-004-01** and **388-008-01** is 0.001mm/0.00005")
- IP65 protection level
- Button: on/off, set, mm/inch, ABS/INC, data output
- Automatic power off
- Data output
- Ratchet stop
- Carbide measuring faces
- Supplied with setting standards



388-004-01

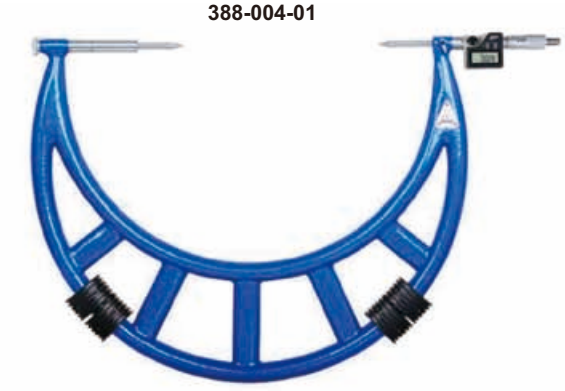

388-012-01

unit: mm

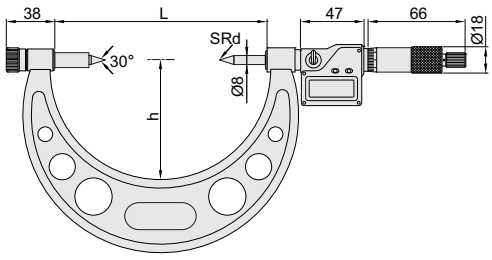

type A

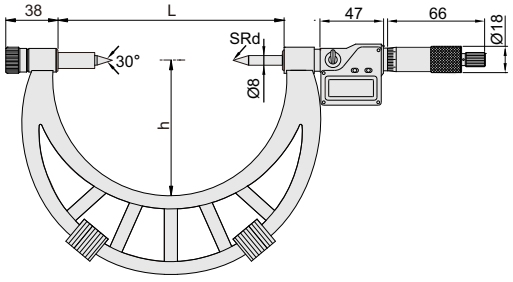

type B

Setting standards **(included)**



Code	Range	Accuracy	Type	L	h	SRd	Setting standards (included)
388-004-01	5-100mm	3μm	A	137	72	0.4	25,50,75mm
388-008-01	100-200mm	4μm	A	237	129	0.5	100,125,150,175mm
388-012-01	200-300mm	5μm	B	414	225	0.7	200,225,250,275mm
388-016-01	300-400mm	6μm	B	514	275	0.7	325,375mm
388-020-01	400-500mm	7μm	B	614	325	0.7	425,475mm
388-024-01	500-600mm	8μm	B	714	375	0.7	525,575mm
388-028-01	600-700mm	8μm	B	814	425	0.7	625,675mm
388-032-01	700-800mm	9μm	B	914	475	0.7	725,775mm
388-036-01	800-900mm	10μm	B	1014	525	0.7	825,875mm

SERIES 398 GEAR ROOT DIAMETER MICROMETER

- Measure diameter of gear root circle
- Graduation 0.01mm
- Ratchet stop
- Meet DIN863-3
- Carbide measuring faces
- Supplied with setting standards



398-004-01

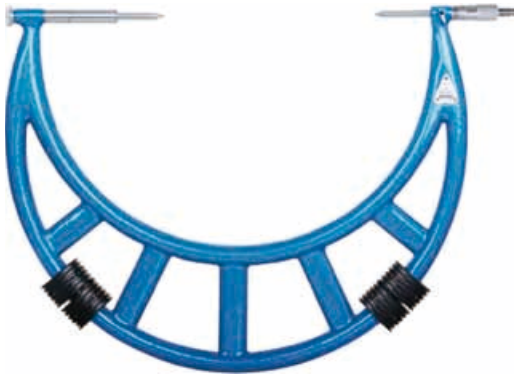

398-012-01

unit: mm

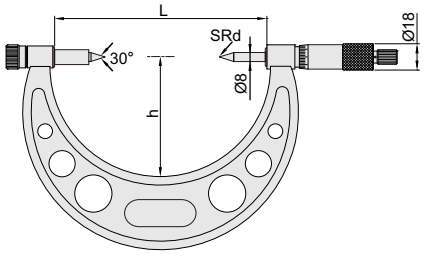

type A

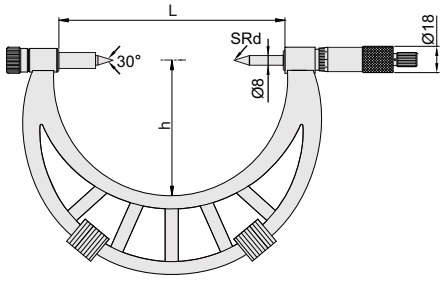

type B

Setting standards **(included)**



Code	Range	Accuracy	Type	L	h	SRd	Setting standards (included)
398-004-01	5-100mm	5µm	A	137	72	0.4	25,50,75mm
398-008-01	100-200mm	7µm	A	237	129	0.5	100,125,150,175mm
398-012-01	200-300mm	9µm	B	414	225	0.7	200,225,250,275mm
398-016-01	300-400mm	11µm	B	514	275	0.7	325,375mm
398-020-01	400-500mm	13µm	B	614	325	0.7	425,475mm
398-024-01	500-600mm	15µm	B	714	375	0.7	525,575mm
398-028-01	600-700mm	16µm	B	814	425	0.7	625,675mm
398-032-01	700-800mm	18µm	B	914	475	0.7	725,775mm
398-036-01	800-900mm	20µm	B	1014	525	0.7	825,875mm

SERIES 316 DIGITAL BLADE MICROMETER

Data output

- Measure the groove diameter of shafts and keyways
- Resolution 0.001mm/0.00005"
- Non-rotating spindle
- Button: on/off, set, mm/inch, ABS/INC
- Automatic power off
- Data output
- Ratchet stop
- Supplied with setting standards (except 0-25mm/0-1")



316-001-01

unit: mm

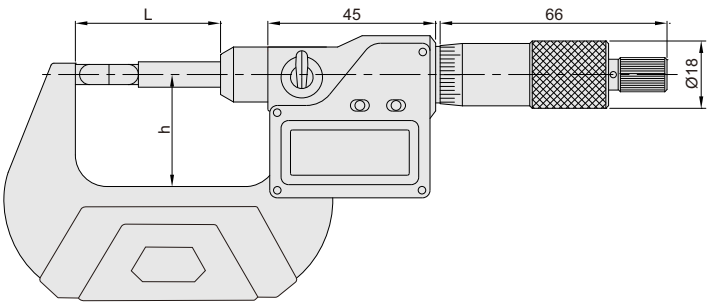

Setting standards (included)



Application

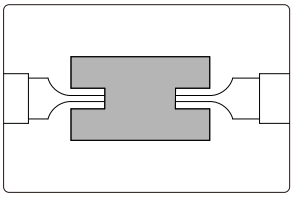

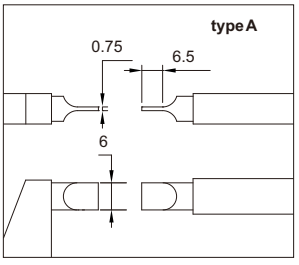

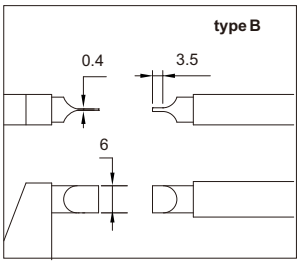

Code	Range	Accuracy	Type	h	L	Setting standards (included)
316-001-01	0-25mm/0-1"	±4μm	A	32	46	-
316-002-01	25-50mm/1-2"	±4μm	A	44.5	71	25mm
316-003-01	50-75mm/2-3"	±5μm	A	57	97	50mm
316-004-01	75-100mm/3-4"	±5μm	A	70	121	75mm
316-005-01	100-125mm/4-5"	±6μm	A	82	147	100mm
316-006-01	125-150mm/5-6"	±6μm	A	94.5	171	125mm
316-007-01	150-175mm/6-7"	±7μm	A	107	197	150mm
316-001-02	0-25mm/0-1"	±4μm	B	32	46	-
316-002-02	25-50mm/1-2"	±4μm	B	44.5	71	25mm
316-003-02	50-75mm/2-3"	±5μm	B	57	97	50mm
316-004-02	75-100mm/3-4"	±5μm	B	70	121	75mm
316-005-02	100-125mm/4-5"	±6μm	B	82	147	100mm
316-006-02	125-150mm/5-6"	±6μm	B	94.5	171	125mm
316-007-02	150-175mm/6-7"	±7μm	B	107	197	150mm

SERIES 326 BLADE MICROMETER

- Measure the small groove diameter
- Graduation: 0.01mm
- Non-rotating spindle
- Ratchet stop
- Setting standards are included (except **0-25mm**)



326-001-03

unit: mm

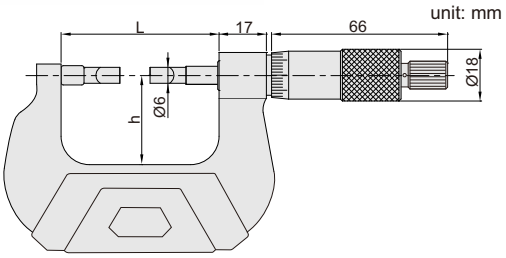

Setting standards (included)



Application

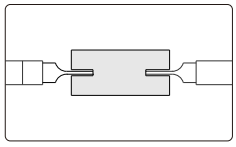

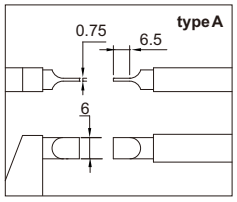

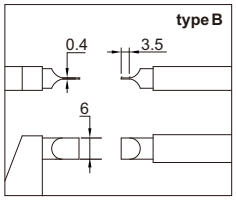

Code	Range	Accuracy	Type	h	L	Setting standards (included)
326-001-03	0-25mm	4μm	A	32	57	-
326-002-03	25-50mm	4μm	A	44.5	82	25mm
326-003-03	50-75mm	5μm	A	57	107	50mm
326-004-03	75-100mm	5μm	A	70	133	75mm
326-005-03	100-125mm	6μm	A	82	158	100mm
326-006-03	125-150mm	6μm	A	94.5	183	125mm
326-007-03	150-175mm	7μm	A	107	208	150mm
326-008-03	175-200mm	7μm	A	130	234	175mm
326-009-03	200-225mm	8μm	A	142	260	200mm
326-010-03	225-250mm	8μm	A	155	285	225mm
326-011-03	250-275mm	9μm	A	168	310	250mm
326-012-03	275-300mm	9μm	A	178	337	275mm
326-001-04	0-25mm	4μm	B	32	57	-
326-002-04	25-50mm	4μm	B	44.5	82	25mm
326-003-04	50-75mm	5μm	B	57	107	50mm
326-004-04	75-100mm	5μm	B	70	133	75mm
326-005-04	100-125mm	6μm	B	82	158	100mm
326-006-04	125-150mm	6μm	B	94.5	183	125mm
326-007-04	150-175mm	7μm	B	107	208	150mm
326-008-04	175-200mm	7μm	B	130	234	175mm
326-009-04	200-225mm	8μm	B	142	260	200mm
326-010-04	225-250mm	8μm	B	155	285	225mm
326-011-04	250-275mm	9μm	B	168	310	250mm
326-012-04	275-300mm	9μm	B	178	337	275mm

SERIES 317 DIGITAL POINT MICROMETER

IP65 Data output

- Measure the web thickness of drills, small grooves and keyways
- Resolution 0.001mm/0.00005"
- IP65 protection level
- Button: on/off, set, mm/inch,ABS/INC, data output
- Automatic power off
- Data output
- Ratchet stop
- Carbide tips
- Supplied with setting standards (except 0-25mm/0-1")



unit: mm

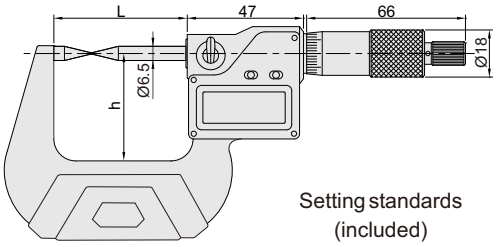

Code	Range	Accuracy	Type	h	L	Setting standards (included)
317-001-01	0-25mm/0-1"	±4μm	A	32	57	-
317-002-01	25-50mm/1-2"	±4μm	A	44.5	82	25mm
317-003-01	50-75mm/2-3"	±5μm	A	57	107	50mm
317-004-01	75-100mm/3-4"	±5μm	A	70	133	75mm
317-001-02	0-25mm/0-1"	±4μm	B	32	57	-
317-002-02	25-50mm/1-2"	±4μm	B	44.5	82	25mm
317-003-02	50-75mm/2-3"	±5μm	B	57	107	50mm
317-004-02	75-100mm/3-4"	±5μm	B	70	133	75mm

Setting standards (included)



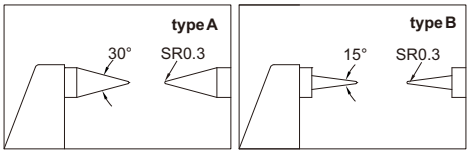

SERIES 327 POINT MICROMETER

- Measure the thickness of drills, small grooves and keyways
- Graduation: 0.01mm
- Ratchet stop
- Carbide measuring faces
- Setting standards are included (except **0-25mm**)



327-002-03

unit: mm

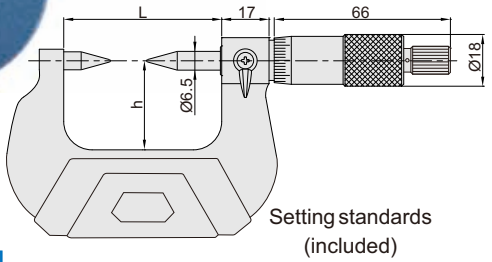

Code	Range	Accuracy	Type	h	L	Setting standards (included)
327-001-03	0-25mm	4μm	A	32	57	-
327-002-03	25-50mm	4μm	A	44.5	82	25mm
327-003-03	50-75mm	5μm	A	57	107	50mm
327-004-03	75-100mm	5μm	A	70	133	75mm
327-001-04	0-25mm	4μm	B	32	57	-
327-002-04	25-50mm	4μm	B	44.5	82	25mm
327-003-04	50-75mm	5μm	B	57	107	50mm
327-004-04	75-100mm	5μm	B	70	133	75mm

Setting standards (included)

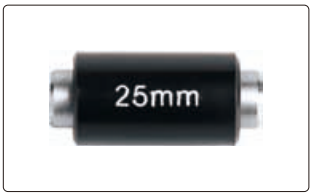

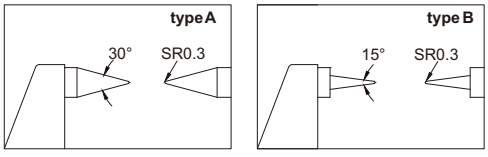

SERIES 318 DIGITAL SPLINE MICROMETER

IP65 Data output

- Measure splined shafts, slots and keyways
- Resolution 0.001mm/0.00005"
- IP65 protection level
- Button: on/off, set, mm/inch, ABS/INC, data output
- Automatic power off
- Data output
- Ratchet stop
- Carbide measuring faces
- Supplied with setting standards (except 0-25mm/0-1")



318-001-02

unit: mm

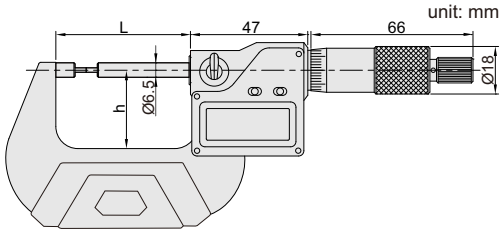

Setting standards(included)



Application

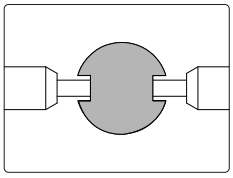

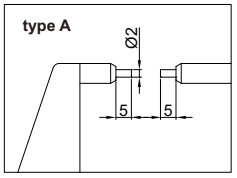

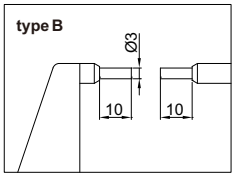

Code	Range	Accuracy	Type	h	L	Setting standards (included)
318-001-01	0-25mm/0-1"	±4μm	A	32	57	-
318-002-01	25-50mm/1-2"	±4μm	A	44.5	82	25mm
318-003-01	50-75mm/2-3"	±5μm	A	57	107	50mm
318-004-01	75-100mm/3-4"	±5μm	A	70	133	75mm
318-005-01	100-125mm/4-5"	±6μm	A	82	158	100mm
318-006-01	125-150mm/5-6"	±6μm	A	94.5	183	125mm
318-007-01	150-175mm/6-7"	±7μm	A	107	208	150mm
318-008-01	175-200mm/7-8"	±7μm	A	130	232	175mm
318-009-01	200-225mm/8-9"	±8μm	A	143	260	200mm
318-010-01	225-250mm/9-10"	±8μm	A	155	285	225mm
318-001-02	0-25mm/0-1"	±4μm	B	32	57	-
318-002-02	25-50mm/1-2"	±4μm	B	44.5	82	25mm
318-003-02	50-75mm/2-3"	±5μm	B	57	107	50mm
318-004-02	75-100mm/3-4"	±5μm	B	70	133	75mm
318-005-02	100-125mm/4-5"	±6μm	B	82	158	100mm
318-006-02	125-150mm/5-6"	±6μm	B	94.5	183	125mm
318-007-02	150-175mm/6-7"	±7μm	B	107	208	150mm
318-008-02	175-200mm/7-8"	±7μm	B	130	232	175mm
318-009-02	200-225mm/8-9"	±8μm	B	143	260	200mm
318-010-02	225-250mm/9-10"	±8μm	B	155	285	225mm

SERIES 328 SPLINE MICROMETER

- Measure grooves and sharped parts
- Graduation: 0.01mm
- Carbide measuring faces
- Ratchet stop
- Setting standards are included (except **0-25mm**)



328-001-03

unit: mm

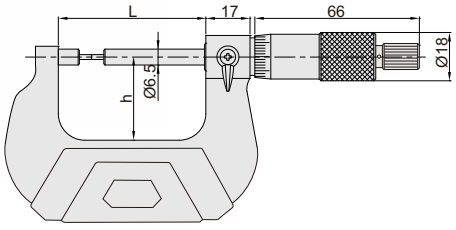

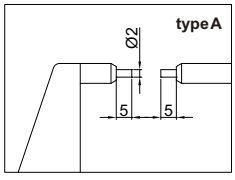

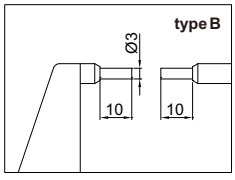



328-009-03

328-008-XX and above belong to this frame

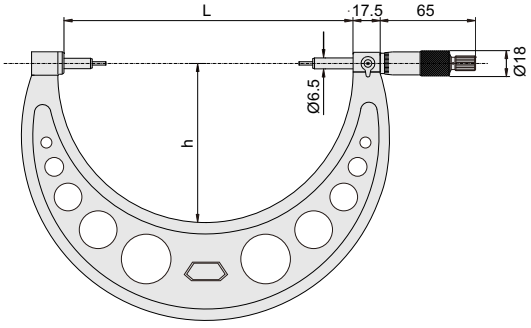

Application

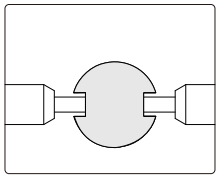

Setting standards (included)



Code	Range	Accuracy	Type	h	L	Setting standards(included)
328-001-03	0-25mm	4μm	B	32	57	-
328-002-03	25-50mm	4μm	B	44.5	82	25mm
328-003-03	50-75mm	5μm	B	57	107	50mm
328-004-03	75-100mm	5μm	B	70	133	75mm
328-005-03	100-125mm	6μm	B	82	158	100mm
328-006-03	125-150mm	6μm	B	94.5	183	125mm
328-007-03	150-175mm	7μm	B	107	208	150mm
328-008-03	175-200mm	7μm	B	130	232	175mm
328-009-03	200-225mm	8μm	B	143	260	200mm
328-010-03	225-250mm	8μm	B	155	285	225mm
328-011-03	250-275mm	9μm	B	170	310	250mm
328-001-04	0-25mm	4μm	A	32	57	-
328-002-04	25-50mm	4μm	A	44.5	82	25mm
328-003-04	50-75mm	5μm	A	57	107	50mm
328-004-04	75-100mm	5μm	A	70	133	75mm
328-005-04	100-125mm	6μm	A	82	158	100mm
328-006-04	125-150mm	6μm	A	94.5	183	125mm
328-007-04	150-175mm	7μm	A	107	208	150mm
328-008-04	175-200mm	7μm	A	130	232	175mm
328-009-04	200-225mm	8μm	A	143	260	200mm
328-010-04	225-250mm	8μm	A	155	285	225mm
328-011-04	250-275mm	9μm	A	170	310	250mm

319 DIGITAL CRIMP HEIGHT MICROMETER

IP65 Data output

- Measure the height of crimp contact
- Resolution 0.001mm/0.00005"
- IP65 protection level
- Button: on/off, set, mm/inch, ABS/INC, data output
- Automatic power off
- Data output
- Ratchet stop



unit: mm

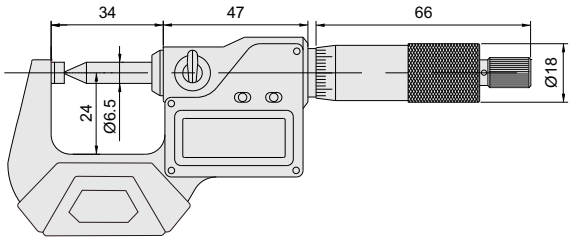

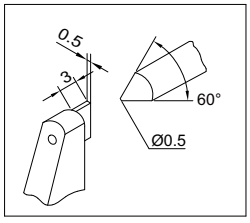

Code	Range	Accuracy
319-001-01	0-25mm/0-1"	±4μm

SERIES 346 CRIMP HEIGHT MICROMETER

- Measure the height of crimp contact
- Graduation 0.01mm
- Ratchet stop
- Supplied with setting standards (except **0-25mm**)



346-001-01

Setting standards(included)



unit: mm

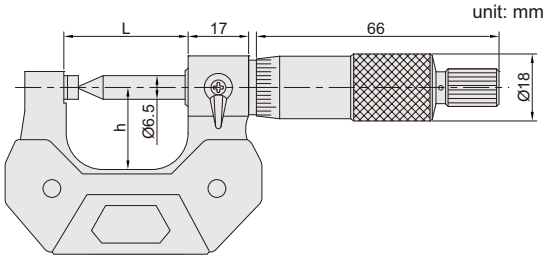

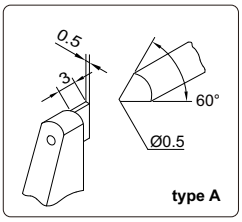

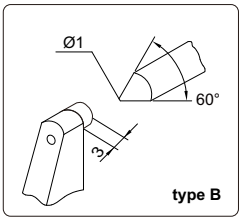

Code	Range	Accuracy	Type	L	h	Setting standards (included)
346-001-01	0-25mm	4μm	A	34	24	-
346-001-02	0-25mm	4μm	B	34	24	-
346-002-02	25-50mm	4μm	B	59	32	25
346-003-02	50-75mm	5μm	B	85	45	50
346-004-02	75-100mm	5μm	B	110	57	75

319 DIGITAL POINT MICROMETER

IP65 Data output

- Measure the height of crimp contact
- Resolution 0.001mm/0.00005"
- IP65 protection level
- Button: on/off, set, mm/inch, ABS/INC, data output
- Automatic power off
- Data output
- Ratchet stop



unit: mm

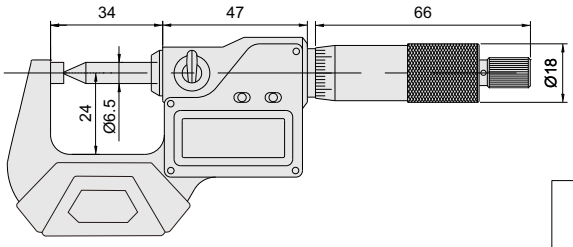

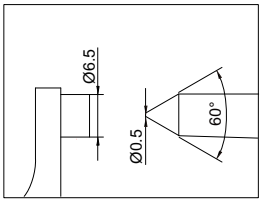

Code	Range	Accuracy
319-001-21	0-25mm/0-1"	±4μm

SERIES 331 DIGITAL SPHERICAL ANVIL TUBE MICROMETER

IP65 Data output

- Measure wall thickness of tubes
- Resolution 0.001mm/0.00005"
- IP65 protection level
- Button: on/off, set, mm/inch,ABS/INC, data output
- Automatic power off
- Data output
- Ratchet stop
- Carbide measuring faces
- Supplied with setting standards (except 0-25mm/0-1")



331-001-02

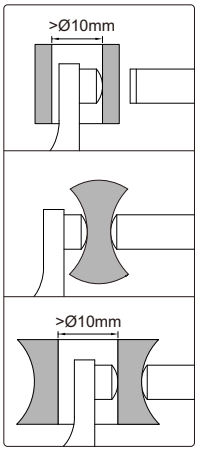

unit: mm

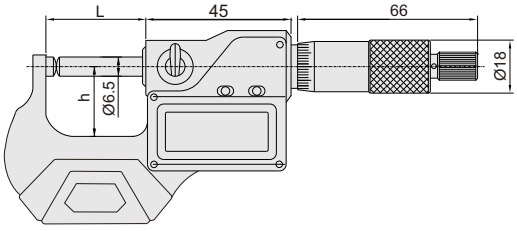

Code	Range	Accuracy	Type	L	h	Setting standards(included)
331-001-01	0-25mm/0-1"	4μm	A	32	24	-
331-002-01	25-50mm/1-2"	4μm	A	57	32	25mm
331-003-01	50-75mm/2-3"	5μm	A	82	44.5	50mm
331-004-01	75-100mm/3-4"	5μm	A	107	57	75mm
331-001-02	0-25mm/0-1"	4μm	B	32	24	-
331-002-02	25-50mm/1-2"	4μm	B	57	32	25mm
331-003-02	50-75mm/2-3"	5μm	B	82	44.5	50mm
331-004-02	75-100mm/3-4"	5μm	B	107	57	75mm

Setting standards (included)



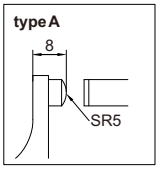

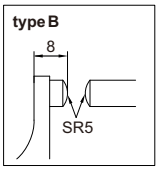

SERIES 340 SPHERICAL ANVIL TUBE MICROMETER

- Measure wall thickness of tubes
- Graduation: 0.01mm
- Carbide measuring faces
- Ratchet stop
- Setting standards are included (except **0-25mm**)

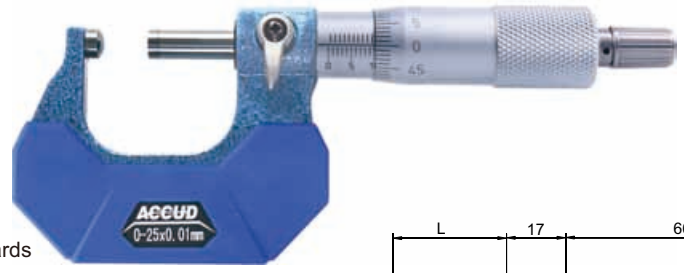

340-001-01

unit: mm

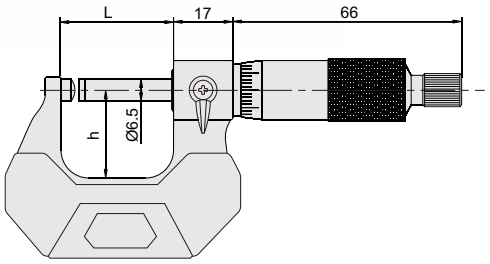

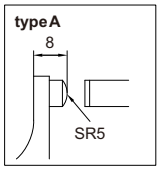

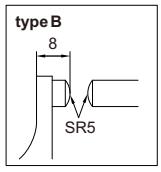

Setting standards (included)



Code	Range	Accuracy	Type	L	h	Setting standards (included)
340-001-01	0-25mm	4µm	A	32	24	-
340-002-01	25-50mm	4µm	A	57	32	25mm
340-003-01	50-75mm	5µm	A	82	44.5	50mm
340-004-01	75-100mm	5µm	A	107	57	75mm
340-005-01	100-125mm	6µm	A	133	70	100mm
340-006-01	125-150mm	6µm	A	158	82	125mm
340-007-01	150-175mm	7µm	A	183	95	150mm
340-001-02	0-25mm	4µm	B	32	24	-
340-002-02	25-50mm	4µm	B	57	32	25mm
340-003-02	50-75mm	5µm	B	82	44.5	50mm
340-004-02	75-100mm	5µm	B	107	57	75mm
340-005-02	100-125mm	6µm	B	133	70	100mm
340-006-02	125-150mm	6µm	B	158	82	125mm
340-007-02	150-175mm	7µm	B	183	95	150mm

Application

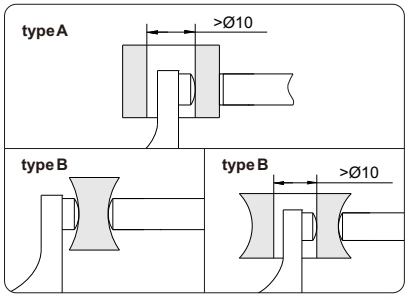

SERIES 380 DIGITAL CYLINDRICAL ANVIL TUBE MICROMETER

IP65 Data output

- Measure wall thickness of tubes
- Resolution 0.001mm/0.00005"
- IP65 protection level
- Button: on/off, set, mm/inch, ABS/INC, data output
- Automatic power off
- Data output
- Ratchet stop
- Carbide spindle tip



380-001-04

unit: mm

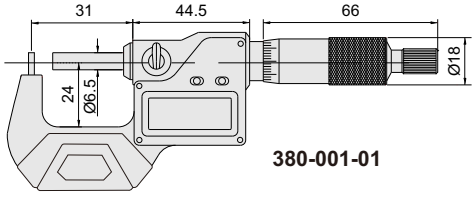

380-001-01

Application

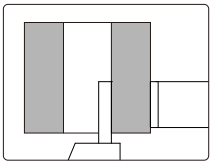

Code	Range	Accuracy	Type
380-001-01	0-25mm/0-1"	±6µm	A
380-001-02	0-25mm/0-1"	±6µm	B
380-001-03	0-25mm/0-1"	±6µm	C
380-001-04	0-25mm/0-1"	±6µm	D

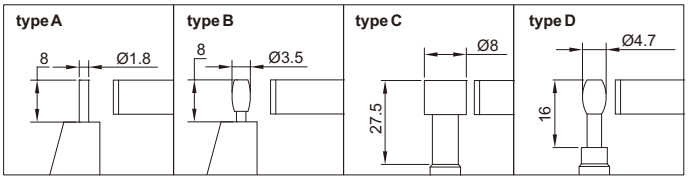

SERIES 341 TUBE MICROMETER

- Measure the wall thickness of tube, bearing and rings
- Graduation: 0.01mm
- Carbide measuring faces
- Ratchet stop
- Setting standards are included (except **0-25mm**)

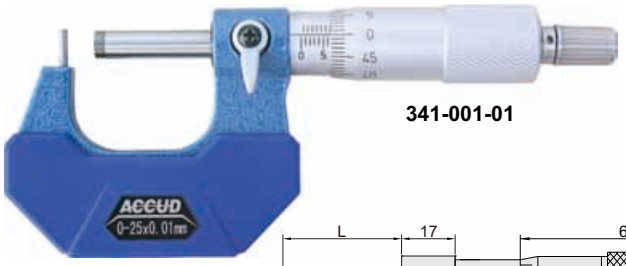

341-001-01

unit: mm

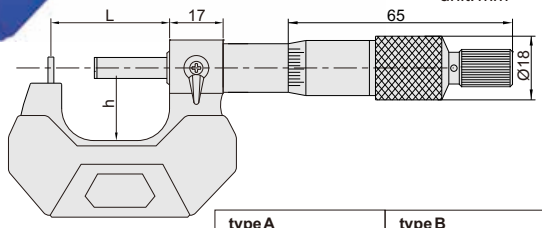

Setting standards(included)



Application

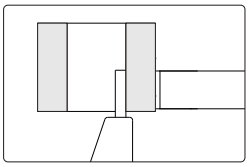

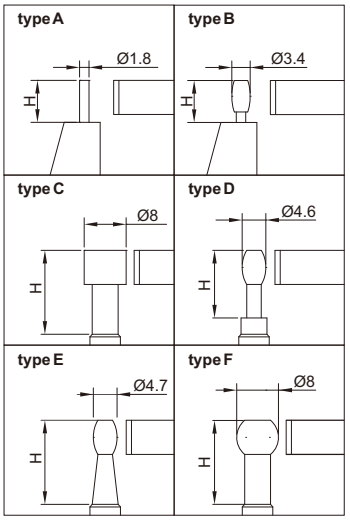

Code	Range	Accuracy	Type	H	h	L	Setting standards (included)
341-001-01	0-25mm	6μm	A	8	24	32	-
341-002-01	25-50mm	6μm	A	8	32	57	25mm
341-001-02	0-25mm	6μm	B	8	24	34	-
341-002-02	25-50mm	6μm	B	15	32	57	25mm
341-001-03	0-25mm	6μm	C	27.5	24	31	-
341-002-03	25-50mm	6μm	C	36.5	32	61	25mm
341-001-04	0-25mm	6μm	D	16	24	30	-
341-002-04	25-50mm	6μm	D	26	32	61	25mm
341-001-05	0-25mm	6μm	E	27.5	25	30	-
341-002-05	25-50mm	6μm	E	35	32	61	25mm
341-001-06	0-25mm	6μm	F	27.5	25	31	-
341-002-06	25-50mm	6μm	F	35.5	32	61	25mm

SERIES 332 DIGITAL NON ROTATING SPINDLE DISK MICROMETER

Data output

- Measure root tangent length of gear
- Resolution 0.001mm/0.00005"
- Non-rotating spindle
- Button: on/off, set, mm/inch, ABS/INC, data output
- Automatic power off
- Data output
- Ratchet stop
- Supplied with setting standards (except **332-001-01**)



332-001-01

unit: mm

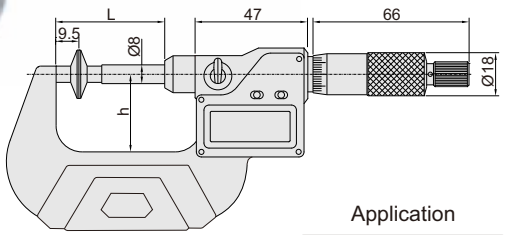

Setting standards(included)



Application

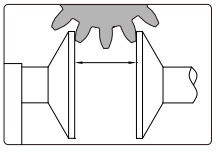

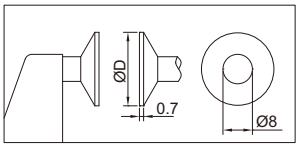

Code	Range	Accuracy	L	h	ØD	Setting standards (included)
332-001-01	0-25mm/0-1"	±4μm	43	32	20	-
332-002-01	25-50mm/1-2"	±4μm	68	44.5	20	25mm
332-003-01	50-75mm/2-3"	±5μm	93	57	20	50mm
332-004-01	75-100mm/3-4"	±5μm	118.5	70	20	75mm
332-005-01	100-125mm/4-5"	±6μm	144	82	30	100mm
332-006-01	125-150mm/5-6"	±6μm	169.5	94.5	30	125mm
332-007-01	150-175mm/6-7"	±7μm	195	107	30	150mm
332-008-01	175-200mm/7-8"	±7μm	220.5	119.5	30	175mm

SERIES 342 DISK MICROMETER

- Measure root tangent length of gear
- Graduation 0.01mm
- Ratchet stop
- Supplied with setting standards (except 0-25mm)

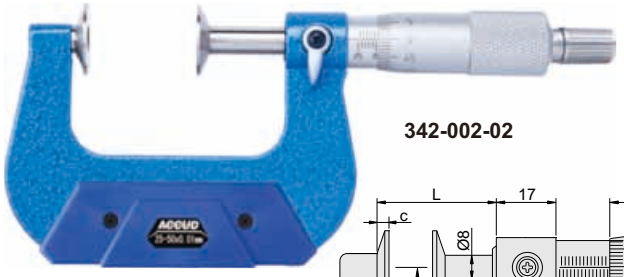

342-002-02

unit: mm

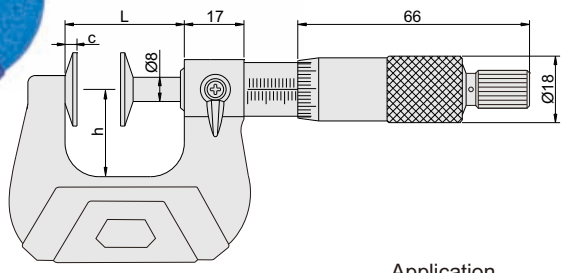

Setting standards(included)



Code	Range	Accuracy	L	h	c	ØD	Setting standards (included)
342-001-02	0-25mm	4μm	34	24	3.3	20	-
342-002-02	25-50mm	4μm	59	32	3.3	20	25mm
342-003-02	50-75mm	5μm	85	45	3.3	20	50mm
342-004-02	75-100mm	5μm	110	57	3.3	20	75mm
342-005-02	100-125mm	6μm	138	70	4.3	30	100mm
342-006-02	125-150mm	6μm	163	82	4.3	30	125mm
342-007-02	150-175mm	7μm	188	95	4.3	30	150mm
342-008-02	175-200mm	7μm	214	107	4.3	30	175mm

Application

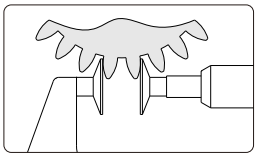

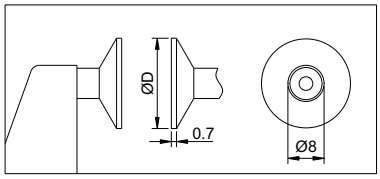

SERIES 342 NON-ROTATING SPINDLE DISK MICROMETER(ECONOMIC TYPE)

- Measure root tangent length of gear
- Graduation 0.01mm
- Non-rotating spindle
- Ratchet stop
- Supplied with setting standards (except 0-25mm)



342-002-01

unit: mm

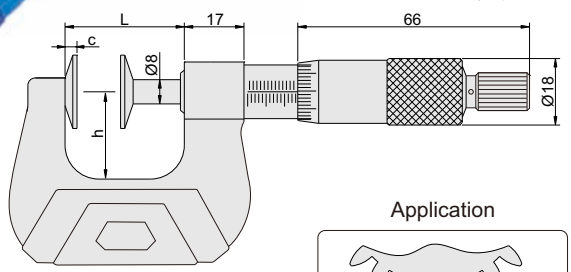

Setting standards(included)

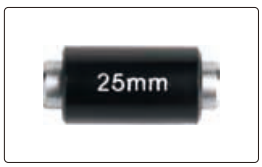

Code	Range	Accuracy	Parallelism	L	h	c	ØD	Setting standards (included)
342-001-01	0-25mm	4μm	5μm	34	24	3.3	20	-
342-002-01	25-50mm	4μm	5μm	59	32	3.3	20	25mm
342-003-01	50-75mm	5μm	5μm	85	45	3.3	20	50mm
342-004-01	75-100mm	5μm	5μm	110	57	3.3	20	75mm
342-005-01	100-125mm	6μm	5μm	138	70	4.3	30	100mm
342-006-01	125-150mm	6μm	5μm	163	82	4.3	30	125mm

Application

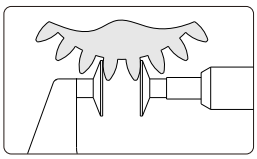

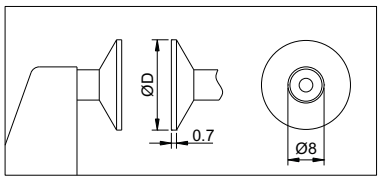

SERIES 334 DIGITAL V-ANVIL MICROMETER

IP65 Data output



334-020-01

- Measure the diameter of parts orcutting tools with odd groovessuch as taps, reamers and end mills
- Resolution: 0.001mm/0.00005"
- Button: on/off, set, mm/inch,ABS/INC, data output
- Automatic power off, Ratchet stop
- Data output
- Carbide measuring faces

unit: mm

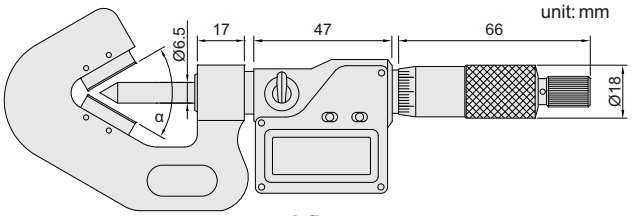

3 flutes

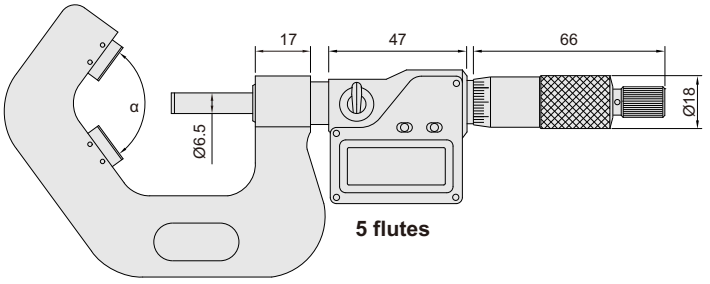

5 flutes

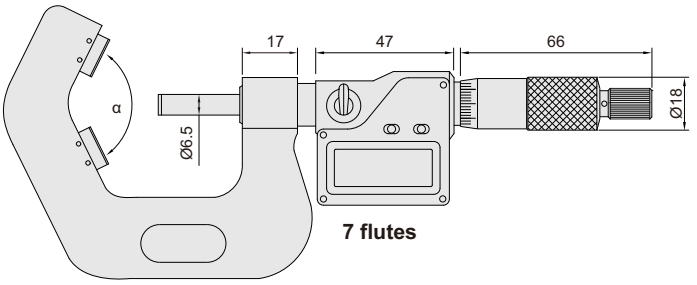

7 flutes

Setting standards (included)



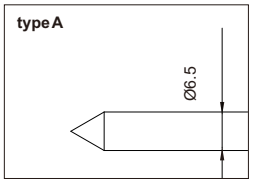

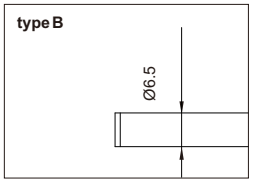

Code	Range	Accuracy	Flutes	α	Type	Setting standards (included)
334-015-01	1-15mm/0.04-0.6"	±4μm	3	60°	A	5mm
334-020-01	5-20mm/0.2-0.8"	±4μm	3	60°	B	5mm
334-035-01	20-35mm/0.8-1.4"	±5μm	3	60°	B	20mm
334-050-01	35-50mm/1.4-2.0"	±5μm	3	60°	B	35mm
334-065-01	50-65mm/2.0-2.6"	±6μm	3	60°	B	50mm
334-080-01	65-80mm/2.6-3.2"	±6μm	3	60°	B	65mm
334-095-01	80-95mm/3.2-3.6"	±6μm	3	60°	B	80mm
334-025-55	5-25mm/0.2-1.0"	±4μm	5	108°	B	5mm
334-045-55	25-45mm/1.0-1.8"	±5μm	5	108°	B	25mm
334-065-55	45-65mm/1.8-2.6"	±6μm	5	108°	B	45mm
334-085-55	65-85mm/2.6-3.4"	±6μm	5	108°	B	65mm
334-105-55	85-105mm/3.3-4.2"	±6μm	5	108°	B	85mm
334-025-77	5-25mm/0.2-1.0"	±4μm	7	128°34'17"	B	5mm
334-045-77	25-45mm/1.0-1.8"	±4μm	7	128°34'17"	B	25mm
334-065-77	45-65mm/1.8-2.6"	±5μm	7	128°34'17"	B	45mm
334-085-77	65-85mm/2.6-3.4"	±5μm	7	128°34'17"	B	65mm

SERIES 334 V-ANVIL MICROMETER



334-006-01

- Measure the diameter of parts orcutting tools with odd groovessuch as taps, reamers and end mills
- Graduation 0.01mm
- Ratchet stop
- Carbide measuring faces
- Supplied with setting standards

unit: mm

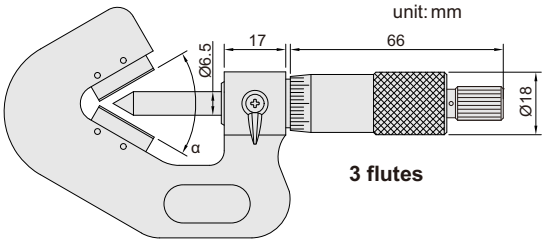

3 flutes

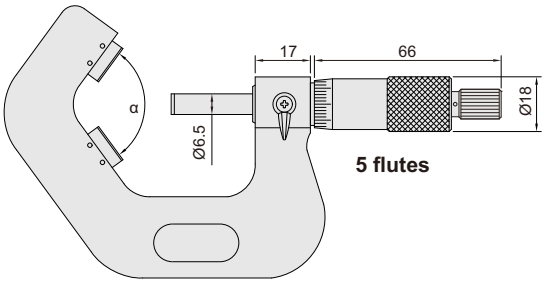

5 flutes

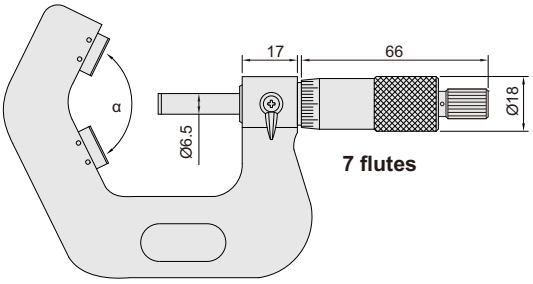

7 flutes

Setting standards (included)



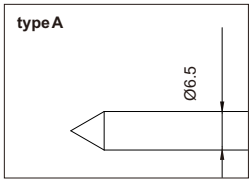

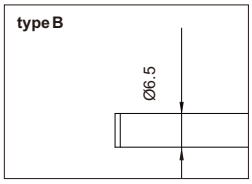

Code	Range	Accuracy	Flutes	α	Type	Setting standards(included)
334-006-01	1-15mm	4μm	3	60°	A	5mm
334-008-01	5-20mm	4μm	3	60°	B	5mm
334-012-01	20-35mm	5μm	3	60°	B	20mm
334-019-01	35-50mm	5μm	3	60°	B	35mm
334-024-01	50-65mm	6μm	3	60°	B	50mm
334-032-01	65-80mm	6μm	3	60°	B	65mm
334-036-01	80-95mm	7μm	3	60°	B	80mm
334-025-05	5-25mm	4μm	5	108°	B	5mm
334-045-05	25-45mm	5μm	5	108°	B	25mm
334-065-05	45-65mm	6μm	5	108°	B	50mm
334-085-05	65-85mm	7μm	5	108°	B	65mm
334-025-07	5-25mm	4μm	7	128°34'17"	B	5mm
334-045-07	25-45mm	5μm	7	128°34'17"	B	25mm
334-065-07	45-65mm	6μm	7	128°34'17"	B	50mm
334-085-07	65-85mm	7μm	7	128°34'17"	B	65mm

SERIES 343 SCREW THREAD MICROMETER

- Measure pitch diameter of screw threads
- Graduation 0.01mm
- Non-rotating spindle
- Ratchet stop
- Supplied with 60° setting standards (except 0-25mm)
- Optional accessory: 55° setting standards , measuring tips

Measuring tips are not included



343-001-02

unit: mm

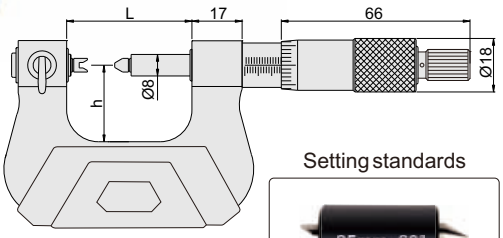

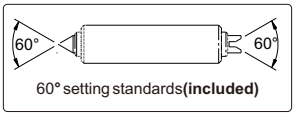

60° setting standards **(included)**



55° setting standards **(optional)**

Setting standards



Application

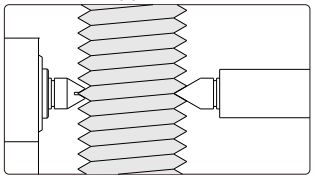

Code	Range	Micrometer head accuracy	L	h	Setting standards (included)
343-001-02	0-25mm	4μm	42	26	-
343-002-02	25-50mm	4μm	67	38	25mm
343-003-02	50-75mm	5μm	92	50	50mm
343-004-02	75-100mm	5μm	118	62	75mm
343-005-02	100-125mm	6μm	143	70	100mm
343-006-02	125-150mm	6μm	168	82	125mm
343-007-02	150-175mm	7μm	192	94.5	150mm
343-008-02	175-200mm	7μm	217	107	175mm
343-009-02	200-225mm	8μm	242	130	200mm
343-010-02	225-250mm	8μm	267	142	225mm
343-011-02	250-275mm	9μm	291	155	250mm
343-012-02	275-300mm	9μm	317	167	275mm

Accuracy of micrometers with tips

Pitch	Range (mm)							
	0-25	25-50	50-75	75-100	100-125	125-200	200-225	225-300
0.4-0.5	±0.01	-	-	-	-	-	-	-
0.6-0.8	±0.01	±0.013	-	-	-	-	-	-
1-1.25	±0.012	±0.015	±0.017	±0.017	-	-	-	-
1.5-2.0	±0.014	±0.017	±0.019	±0.019	±0.020	±0.023	±0.025	±0.028
2.5-3.5	±0.016	±0.019	±0.021	±0.021	±0.023	±0.025	±0.028	±0.031
4.0-7.0	-	±0.021	±0.023	±0.023	±0.025	±0.028	±0.031	±0.033

SERIES 343 MEASURING TIPS FOR SCREW THREAD MICROMETER

- For series 343 screw thread micrometer



343-000-01

Whitworth thread (55° thread angle)

Code	Pitch
343-000-11	60-48TPI
343-000-12	48-40TPI
343-000-13	40-32TPI
343-000-14	32-24TPI
343-000-15	24-18TPI
343-000-16	18-14TPI
343-000-17	14-10TPI
343-000-18	10-7TPI
343-000-19	7-4.5TPI
343-000-20	4.5-3.5TPI
343-000-2TS	10 pairs/set, including all above tips

unit: mm

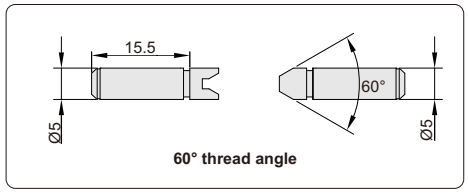

60° thread angle

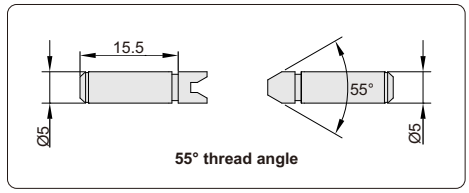

55° thread angle

Metric and unified thread (60° thread angle)

Code	Pitch
343-000-01	0.4-0.5mm/ 64-48TPI
343-000-02	0.6-0.9mm/ 44-28TPI
343-000-03	1-1.75mm/ 24-14TPI
343-000-04	2-3mm/ 13-9TPI
343-000-05	3.5-5mm/ 8-5TPI
343-000-06	5.5-7mm/ 4.5-3.5TPI
343-000-TS	6 pairs/set, including all above tips

Install tips

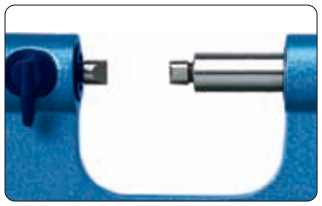

SERIES 333 DIGITAL SCREW THREAD MICROMETER

Data output

- Measure pitch diameter of screw threads
- Resolution 0.001mm/0.00005"
- Button: on/off, set, mm/inch, ABS/INC, data output
- Automatic power off
- Data output
- Non-rotating spindle
- Ratchet stop
- Supplied with 60° setting standards (except **333-001-01**)
- Optional accessory: 55° setting standards



333-001-01

unit: mm

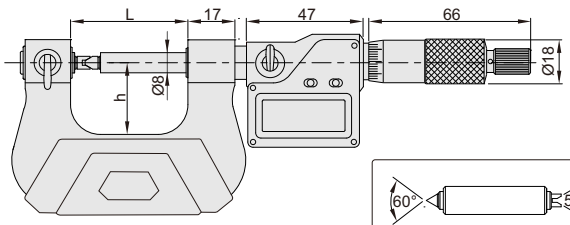

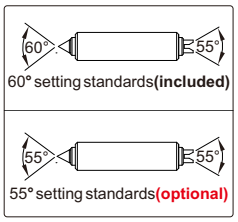

Code	Range	Micrometer head accuracy	L	h	Setting standards (included)
333-001-01	0-25mm/0-1"	±4μm	42	26	-
333-002-01	25-50mm/1-2"	±4μm	67	38	25mm
333-003-01	50-75mm/2-3"	±5μm	92	50	50mm
333-004-01	75-100mm/3-4"	±5μm	117.6	62	75mm
333-005-01	100-125mm/4-5"	±6μm	143	70	100mm
333-006-01	125-150mm/5-6"	±6μm	168	82	125mm
333-007-01	150-175mm/6-7"	±7μm	192	94.5	150mm
333-008-01	175-200mm/7-8"	±7μm	217	107	175mm
333-009-01	200-225mm/8-9"	±8μm	242	130	200mm
333-010-01	225-250mm/9-10"	±8μm	267	142	225mm
333-011-01	250-275mm/10-11"	±9μm	291	155	250mm
333-012-01	275-300mm/11-12"	±9μm	317	167	275mm

Setting standards



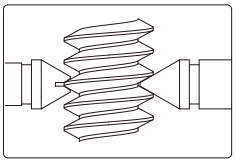

Accuracy of micrometers with tips

Pitch	Range (mm)							
	0-25	25-50	50-75	75-100	100-125	125-200	200-225	225-300
0.4-0.5	±0.01	-	-	-	-	-	-	-
0.6-0.8	±0.01	±0.013	-	-	-	-	-	-
1-1.25	±0.012	±0.015	±0.017	±0.017	-	-	-	-
1.5-2.0	±0.014	±0.017	±0.019	±0.019	±0.020	±0.023	±0.025	±0.028
2.5-3.5	±0.016	±0.019	±0.021	±0.021	±0.023	±0.025	±0.028	±0.031
4.0-7.0	-	±0.021	±0.023	±0.023	±0.025	±0.028	±0.031	±0.033

SERIES 335 LIMIT MICROMETER

- Used as Go/No-Go gauge by setting upper and lower limits
- Graduation 0.002mm
- Carbide measuring faces
- Supplied with setting standard (except **335-001-01**)

Setting standards(included)



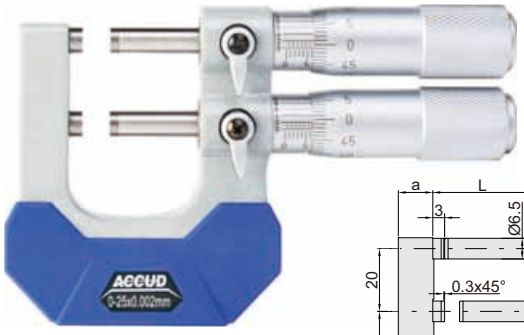

335-001-01

unit: mm

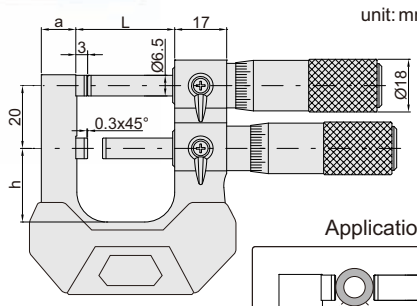

Application

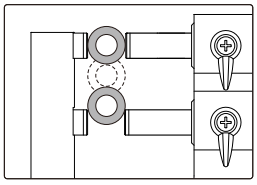

Code	Range	Accuracy	L	a	h	Setting standards(included)
335-001-01	0-25mm	4μm	32	12	24	-
335-002-01	25-50mm	4μm	57	15	32	25mm

SERIES 350 DIGITAL SHEET METAL MICROMETER

Data output IP65

- Deep frame suitable for sheet metal, paper and plastic
- Resolution: 0.001mm/0.00005"
- IP65 protection level
- Button: on/off, mm/inch,set, zero, ABS/INC,data output
- Automatic power off
- Data output
- Carbide measuring faces, ratchet stop



350-001-11

unit: mm

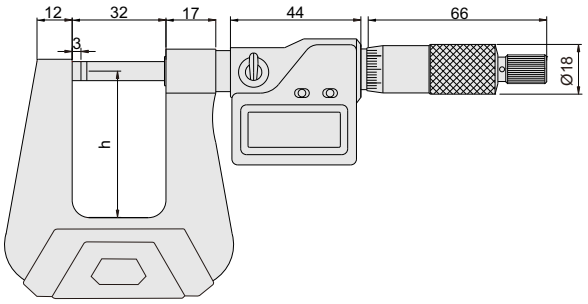

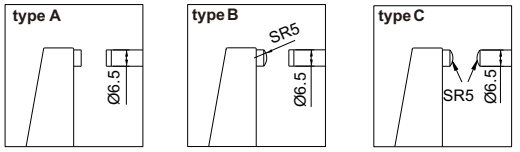

Code	Range	Accuracy	Type	h
350-001-11	0-25mm/0-1"	±3μm	A	50
350-001-12	0-25mm/0-1"	±5μm	A	100
350-001-13	0-25mm/0-1"	±7μm	A	150
350-001-21	0-25mm/0-1"	±3μm	B	50
350-001-22	0-25mm/0-1"	±5μm	B	100
350-001-23	0-25mm/0-1"	±7μm	B	150
350-001-24	0-25mm/0-1"	±10μm	B	310
350-001-31	0-25mm/0-1"	±3μm	C	50
350-001-32	0-25mm/0-1"	±5μm	C	100
350-001-33	0-25mm/0-1"	±7μm	C	150

SERIES 336 SHEET METAL MICROMETER

- Deep frame suitable for sheet metal, paper and plastic
- Graduation 0.01mm
- Ratchet stop
- Carbide measuring faces

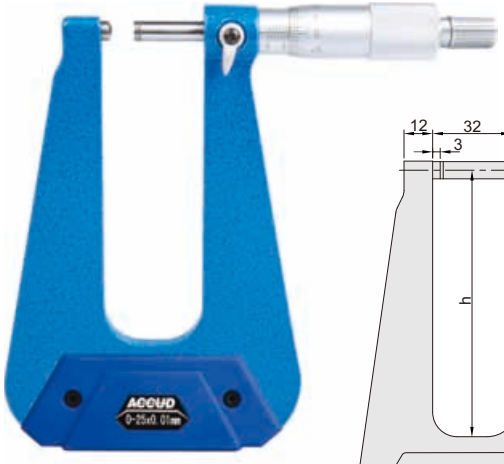

336-001-01

unit: mm

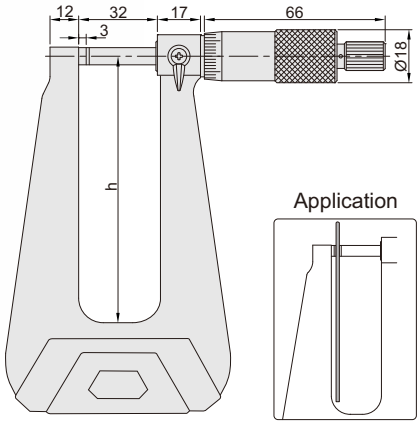

Code	Range	Accuracy	Type	h
336-001-11	0-25mm	4μm	A	50
336-001-21	0-25mm	4μm	B	50
336-001-31	0-25mm	4μm	C	50
336-001-01	0-25mm	7μm	B	100
336-001-02	0-25mm	7μm	A	155
336-001-03	0-25mm	7μm	B	155
336-001-04	0-25mm	7μm	C	155
336-001-05	0-25mm	10μm	B	310

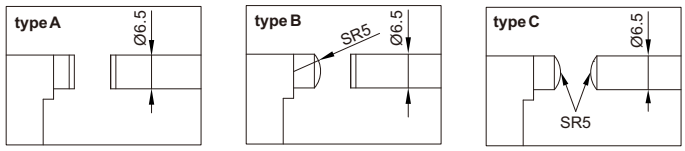

SERIES 339 DIGITAL JAW TYPE MICROMETER

Data output

- Resolution: 0.001mm/0.00005"
- Buttons: on/off, set, mm/inch, ABS/INC data output
- Automatic power off
- Data output
- Non-rotating spindle
- Supplied with setting standards (except **339-001-01**)



339-001-01

Setting standards(included)



unit: mm

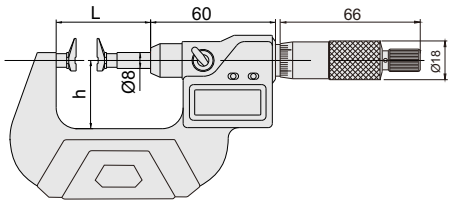

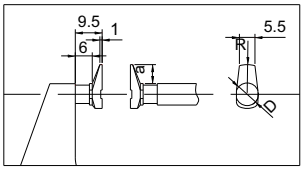

Application

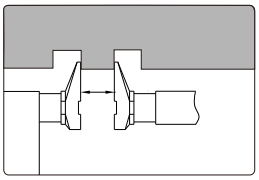

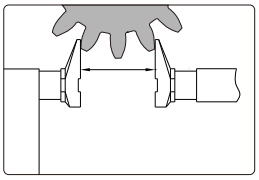

Code	Range	Accuracy	L	a	h	R	D	Setting standards(included)
339-001-01	0-25mm/0-1"	4μm	43	6.5	32	10	8	-
339-002-01	25-50mm/1-2"	4μm	85	6.5	44.5	10	8	25mm
339-003-01	50-75mm/2-3"	5μm	95	6.5	57	10	8	50mm
339-004-01	75-100mm/3-4"	5μm	120	6.5	70	10	8	75mm
339-005-01	100-125mm/4-5"	6μm	145	11.5	86	15	12	100mm
339-006-01	125-150mm/5-6"	6μm	171	11.5	94.5	15	12	125mm
339-007-01	150-175mm/6-7"	7μm	196	11.5	107	15	12	150mm
339-008-01	175-200mm/7-8"	7μm	221	11.5	120	15	12	175mm

SERIES 330 JAW TYPE MICROMETER

- Graduation :0.01mm
- Non-rotating spindle, painted frame,
- Ratchet stop
- Supplied with setting standards (except **330-001-01**)



330-001-01

Setting standards(included)



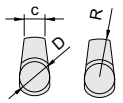

unit: mm

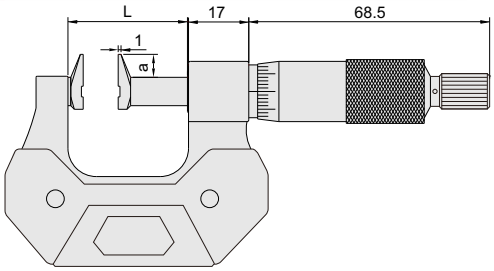

Code	Range	Accuracy	L	a	c	R	D	Setting standards (included)
330-001-01	0-25mm	4μm	34	6	5	10	8	-
330-002-01	25-50mm	4μm	59	6	5	10	8	25mm
330-003-01	50-75mm	5μm	85	6	5	10	8	50mm
330-004-01	75-100mm	5μm	110	6	5	10	8	75mm
330-005-01	100-125mm	6μm	138	9	8	15	12	100mm
330-006-01	125-150mm	6μm	163	9	8	15	12	125mm
330-007-01	150-175mm	7μm	188	9	8	15	12	150mm
330-008-01	175-200mm	7μm	214	9	8	15	12	175mm

Application

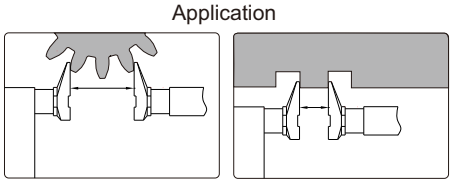

SERIES 338 DIGITAL CALIPER TYPE MICROMETER

Data output

- Resolution: 0.001mm/0.00005"
- Buttons: on/off, set, mm/inch, ABS/INC data output
- Automatic power off
- Date output
- Supplied with setting standards (except **338-001-01**)



338-001-01

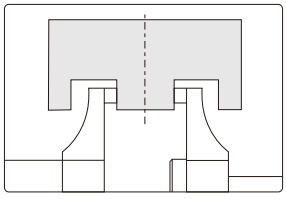

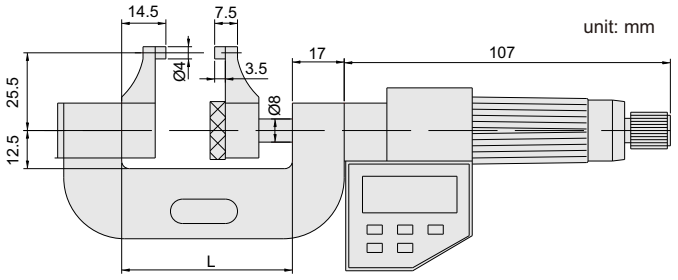

Code	Range	Accuracy	L	Setting standards(included)
338-001-01	0-25mm/0-1"	10μm	56	-
338-002-01	25-50mm/1-2"	10μm	81	25mm
338-003-01	50-75mm/2-3"	11μm	106	50mm
338-004-01	75-100mm/3-4"	11μm	131	75mm

Setting standards(included)



SERIES 378 CALIPER TYPE MICROMETER

- Graduation 0.01mm
- Non-rotating spindle
- Ratchet stop
- Carbide measuring faces
- Supplied with setting standards (except **378-001-01**)



378-001-01

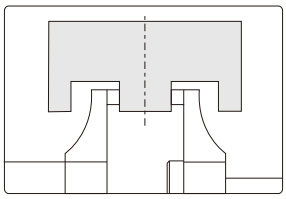

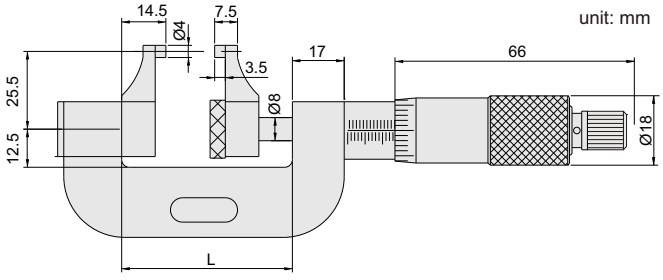

Code	Range	Accuracy	L	Setting standards(included)
378-001-01	0-25mm	10μm	56	-
378-002-01	25-50mm	10μm	81	25mm
378-003-01	50-75mm	11μm	106	50mm
378-004-01	75-100mm	11μm	131	75mm

Setting standards(included)



SERIES 337 HUB MICROMETER

- Measure hub thickness and shoulder inside a bore
- Graduation 0.01mm
- Ratchet stop
- Carbide measuring faces
- Supplied with setting standards (except **337-001-01**)



337-002-01

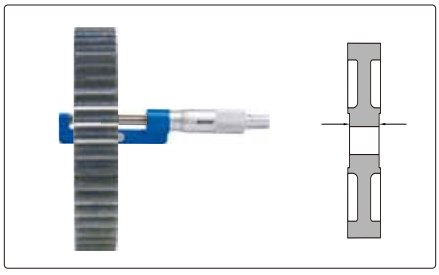

unit: mm

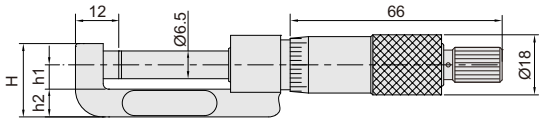

Code	Range	Accuracy	h1	h2	H	Setting standards(included)
337-001-01	0-25mm	4μm	6	9	18.7	-
337-002-01	25-50mm	4μm	6.5	11	21.2	25mm
337-003-01	50-75mm	5μm	6.5	11	21.2	50mm
337-004-01	75-100mm	5μm	6.5	11	21.2	75mm

Setting standards(included)



SERIES 308 LARGE ANVIL MICROMETER

- Graduation 0.01mm
- Ratchet stop
- Supplied with setting standards (except 0-25mm)



308-001-01

Setting standards(included)



unit: mm

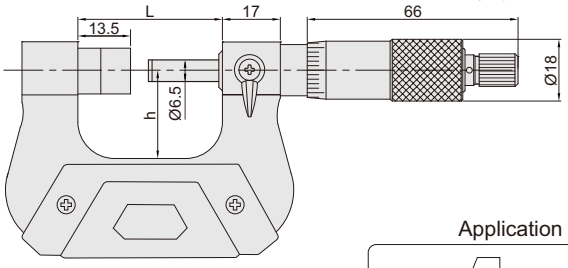

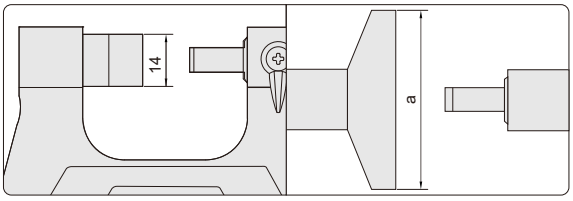

Application

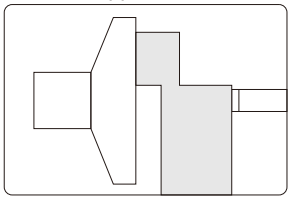

Code	Range	Accuracy	a	h	L	Setting standards(included)
308-001-01	0-25mm	4μm	50	26	42	-
308-002-01	25-50mm	4μm	60	38	67	25mm

SERIES 302 DIGITAL UNIVERSAL MICROMETER

Data output

CR2032

- Resolution 0.001mm/0.00005"
- Button: on/off, set, mm/inch, ABS/INC, data output
- Automatic power off
- Data output
- Ratchet stop
- Supplied with 7 pairs of anvil/spindle tips
- Setting standards are included (except 0-25mm/0-1")
- Optional accessory: 55° anvil/spindle tip



302-001-01

Standard anvil/spindle tip

Flat	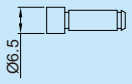	
Spherical	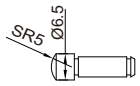	
Spline	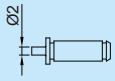	
Disk	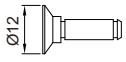	
Blade	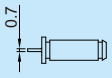	
Knife-edge	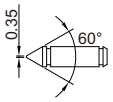	
Point	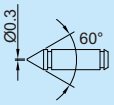	

unit: mm

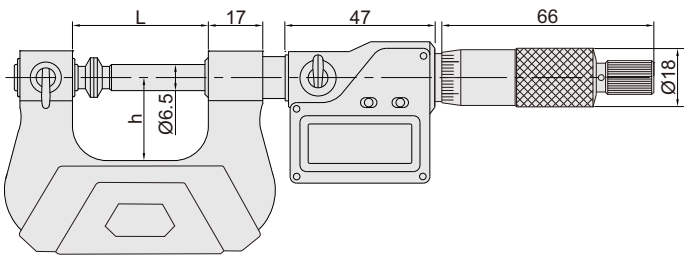

Optional 55° anvil/spindle tip

301-000-01 Knife-edge	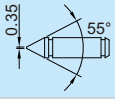	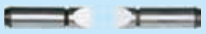
301-000-02 Point	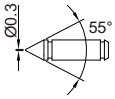	

Code	Range	Accuracy	L	h	Setting standards(included)
302-001-01	0-25mm/0-1"	4μm	42	26	-
302-002-01	25-50mm/1-2"	4μm	67	38	25mm
302-003-01	50-75mm/2-3"	5μm	92	50	50mm
302-004-01	75-100mm/3-4"	5μm	118	62	75mm
302-005-01	100-125mm/4-5"	6μm	143	70	100mm
302-006-01	125-150mm/5-6"	6μm	168	82	125mm
302-007-01	150-175mm/6-7"	7μm	192	95	150mm
302-008-01	175-200mm/7-8"	7μm	217	107	175mm

Setting standards(included)



SERIES 301 NON ROTATING SPINDLE UNIVERSAL MICROMETER

- Graduation 0.01mm
- Non-rotating spindle
- Ratchet stop
- Supplied with7 pairs of anvil/spindle tips
- Setting standards are included (except 0-25mm)
- Optional accessory:55°anvil/spindle tip



301-001-01

Standard anvil/spindle tip

Flat	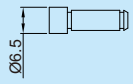	
Spherical	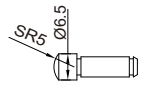	
Spline	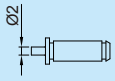	
Disk	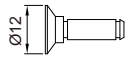	
Blade	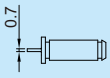	
Knife-edge	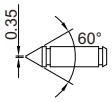	
Point	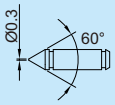	

unit: mm

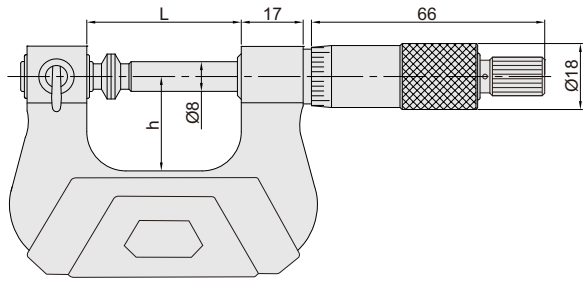

Optional 55°anvil/spindle tip

301-000-01 Knife-edge	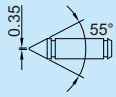	
301-000-02 Point	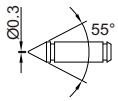	

Code	Range	Accuracy	L	h	Setting standards(included)
301-001-01	0-25mm	4μm	42	26	-
301-002-01	25-50mm	4μm	67	38	25mm
301-003-01	50-75mm	5μm	92	50	50mm
301-004-01	75-100mm	5μm	118	62	75mm
301-005-01	100-125mm	6μm	143	70	100mm
301-006-01	125-150mm	6μm	168	82	125mm
301-007-01	150-175mm	7μm	192	95	150mm
301-008-01	175-200mm	7μm	217	107	175mm

Setting standards(included)



SERIES 301 UNIVERSAL MICROMETER TIPS



301-000-11

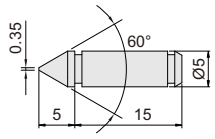



301-000-12

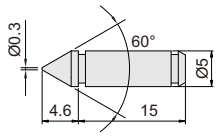



301-000-13

unit: mm

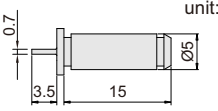



301-000-14

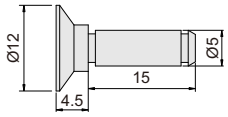



301-000-15

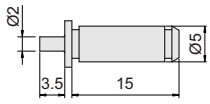



301-000-16

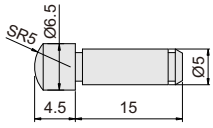



301-000-17

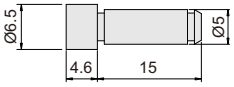

Code	Name
301-000-11	Knife-edge
301-000-12	Point
301-000-13	Blade
301-000-14	Disk
301-000-15	Spline
301-000-16	Spherical
301-000-17	Flat
301-000-TS	7pairs/set, including all above tips

- For series 301 non rotating spindle universal micrometer and series 302 digital universal micrometer

SERIES 310 OUTSIDE MICROMETER FOR LEFT OR RIGHT HAND

- Graduation: 0.01mm
- Graduations on two sides
- Ratchet stop
- Carbide measuring faces
- Meet DIN863-1
- Supplied with setting standards (except 0-25mm)

Setting standards (included)





310-001-01



Code	Range	Accuracy	a	h	L	Setting standards (included)
310-001-01	0-25mm	4μm	6	24	32	-
310-002-01	25-50mm	4μm	8	32	57	25mm
310-003-01	50-75mm	5μm	8	45	82	50mm
310-004-01	75-100mm	5μm	8	57	107	75mm
310-005-01	100-125mm	6μm	8	70	133	100mm
310-006-01	125-150mm	6μm	8	82	158	125mm
310-007-01	150-175mm	7μm	8	95	183	150mm
310-008-01	175-200mm	7μm	8	107	209	175mm

unit: mm

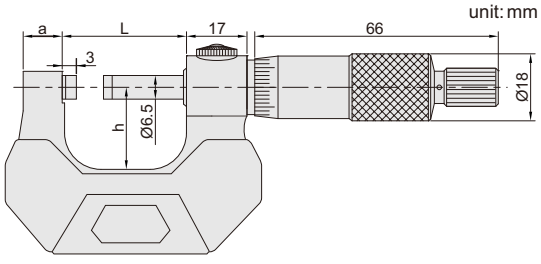

SERIES 397 DIGITAL INTERCHANGEABLE ANVIL MICROMETER

Data output IP65

- Measure tube thickness, shoulder edge distance, rivet head height, etc.
- Supplied with flat anvil and rod anvil
- Resolution 0.001mm/0.00005"
- IP65 dust/waterproof
- Button function: on/off, set, mm/inch, data transmit
- Automatic power off
- Data output
- Ratchet stop
- Carbide spindle tip
- Setting standards are included (except 0-25mm/0-1")



397-001-01

unit: mm

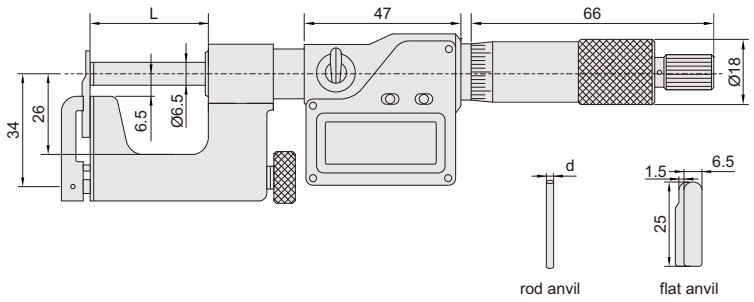

Setting standards (included)



Application

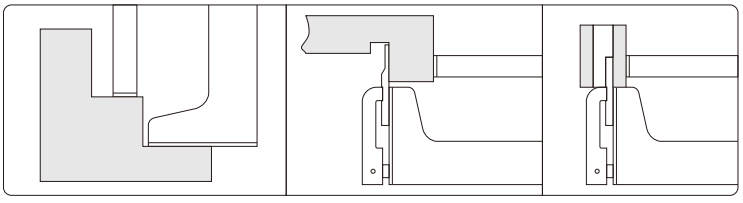

Code	Range	Accuracy	L	d
397-001-01	0-25mm/0-1"	±4μm	28.5	Ø3
397-002-01	25-50mm/1-2"	±4μm	53.5	Ø5

SERIES 377 INTERCHANGEABLE ANVIL MICROMETER

- Measure tube thickness, shoulder edge distance, rivet head height, etc.
- Supplied with flat anvil and rod anvil
- Graduation 0.01mm
- Ratchet stop
- Carbide spindle tip
- Setting standards are included (except 0-25mm)



377-001-01

unit: mm

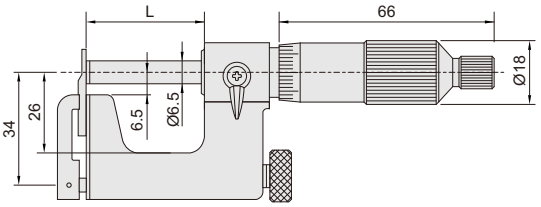

Setting standards (included)



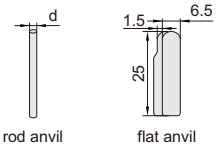

Application

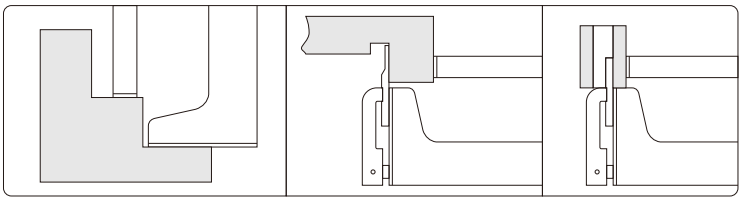

Code	Range	Accuracy	L	d
377-001-01	0-25mm	4μm	28. 5	Ø3
377-002-01	25-50mm	4μm	53. 5	Ø5

SERIES 304 DIGITAL GEAR TOOTH MICROMETER

Data output | IP65 | CR2032



304-002-01

- Measure over-pin diameter of gears
- Resolution 0.001mm/0.00005"
- IP65 dust/waterproof
- Button function: on/off, set, mm/inch, ABS/INC
- Data output (cable code: 300-03 or 300-04)
- Automatic power off
- Ratchet stop
- Supplied with setting standards (except **304-001-01**)
- Optional accessory: ball tips (code: series **345-000-XX**)

unit: mm

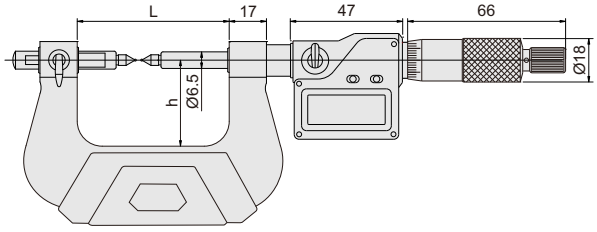

Setting standards (included)



Install points



Application

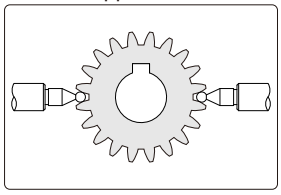

Code	Range	Accuracy	L	h	Setting standards (included)
304-001-01	0-25mm/0-1"	±4μm	67	38	-
304-002-01	25-50mm/1-2"	±4μm	92.4	50	25mm
304-003-01	50-75mm/2-3"	±5μm	117.6	62	50mm
304-004-01	75-100mm/3-4"	±5μm	143	70	75mm
304-005-01	100-125mm/4-5"	±6μm	168.2	82	100mm
304-006-01	125-150mm/5-6"	±6μm	192	94.5	125mm
304-007-01	150-175mm/6-7"	±7μm	217	107	150mm
304-008-01	175-200mm/7-8"	±7μm	242	130	175mm
304-009-01	200-225mm/8-9"	±8μm	267	142.5	200mm
304-010-01	225-250mm/9-10"	±8μm	292	155	225mm
304-011-01	250-275mm/10-11"	±9μm	317	167.5	250mm

SERIES 345 GEAR TOOTH MICROMETER

- Measure over-pin diameter of gears
- Graduation 0.01mm
- Ratchet stop
- Supplied with setting standards (except **345-001-01**)
- Optional accessory: ball tips



345-001-01

Setting standards (included)



unit: mm

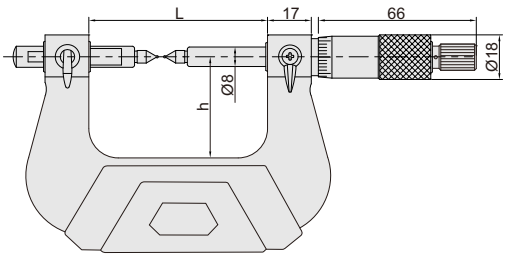

Code	Range	Accuracy	L	h	Setting standards(included)
345-001-01	0-25mm	4μm	67	38	-
345-002-01	25-50mm	4μm	92.4	50	25mm
345-003-01	50-75mm	5μm	117.6	62	50mm
345-004-01	75-100mm	5μm	143	70	75mm
345-005-01	100-125mm	6μm	168.2	82	100mm
345-006-01	125-150mm	6μm	192	94.5	125mm
345-007-01	150-175mm	7μm	217	107	150mm
345-008-01	175-200mm	7μm	242	130	175mm
345-009-01	200-225mm	8μm	267	142.5	200mm
345-010-01	225-250mm	8μm	292	155	225mm
345-011-01	250-275mm	9μm	317	167.5	250mm

Application

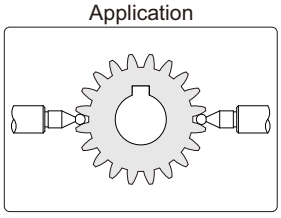

SERIES 345 BALL TIPS FOR GEAR TOOTH MICROMETER

- Supplied in pair



345-000-01

unit: mm

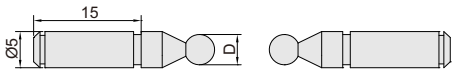

Code	Ball dia.(D)
345-000-01	SØ1mm
345-000-02	SØ1.5mm
345-000-03	SØ2.0mm
345-000-04	SØ2.5mm
345-000-05	SØ3.0mm
345-000-06	SØ3.5mm

Code	Ball dia.(D)
345-000-07	SØ4.0mm
345-000-08	SØ4.5mm
345-000-09	SØ5.0mm
345-000-10	SØ6.0mm
345-000-TS	10 pairs/set, including all above tips

Install points

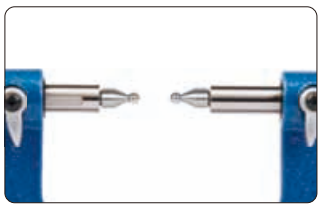

SERIES 344 GROOVE MICROMETER



344-004-01



344-002-11

- Graduation 0.01mm
- Measure width of grooves inside bores
- Non-rotating spindle
- Two graduations for inside and outside measurement

unit: mm

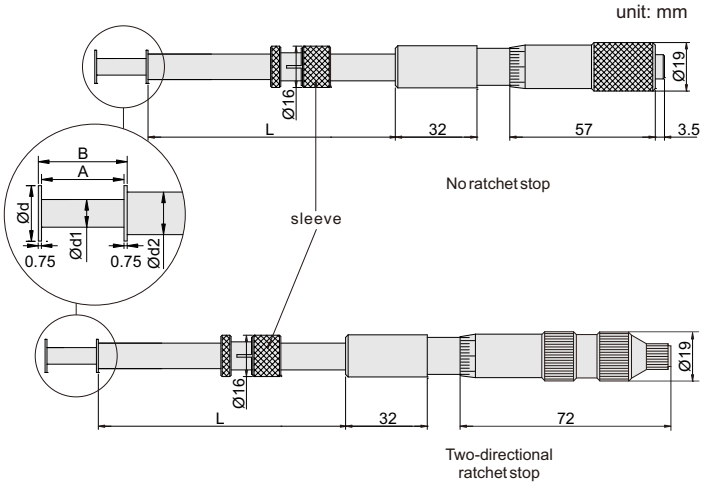

Application

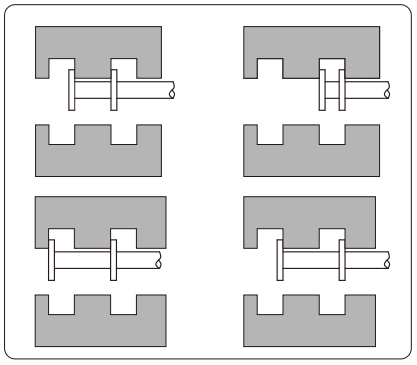

Two-directional ratchet stop

Code	Range (outside B)	Range (inside A)	Accuracy	Ød	Ød1	Ød2	L
344-001-11	0-25mm	1.6-26.5mm	10μm	13	6.5	10	102
344-002-11	25-50mm	26.5-51.5mm	10μm	13	6.5	10	102
344-003-11	50-75mm	51.5-76.5mm	10μm	13	6.5	10	102
344-004-11	75-100mm	76.5-101.5mm	10μm	13	6.5	10	102
344-001-12	0-25mm	1.6-26.5mm	10μm	6.5	3	5	40

No ratchet stop

Code	Range (outside B)	Range (inside A)	Accuracy	Ød	Ød1	Ød2	L
344-001-01	0-25mm	1.6-26.5mm	10μm	13	6.5	10	102
344-002-01	25-50mm	26.5-51.5mm	10μm	13	6.5	10	102
344-003-01	50-75mm	51.5-76.5mm	10μm	13	6.5	10	102
344-004-01	75-100mm	76.5-101.5mm	10μm	13	6.5	10	102
344-001-02	0-25mm	1.6-26.5mm	10μm	6.5	3	5	40

*344-001-02 and 344-001-12 do not have sleeve.

SERIES 348 CAN SEAM MICROMETER

- Measure the width, height and depth of can seams
- Graduation 0.01mm



348-001-01

unit: mm

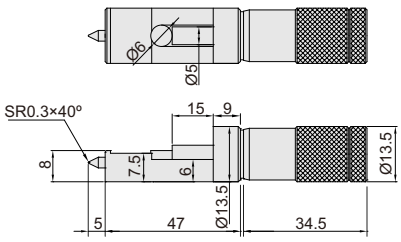

348-001-01

Application

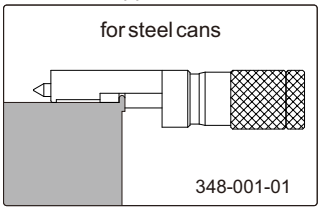



348-001-02

unit: mm

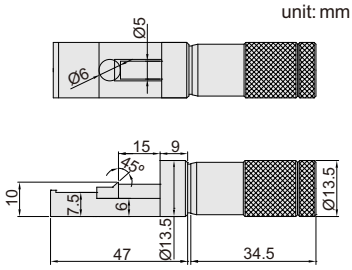

348-001-02

Application

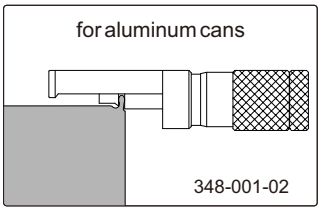



348-001-03

unit: mm

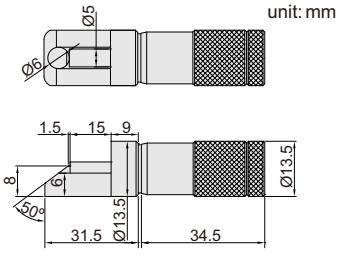

348-001-03

Application

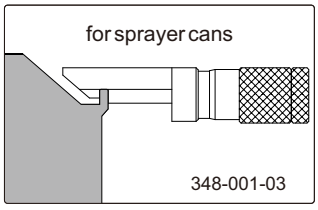

Code	Range	Accuracy
348-001-01	0-13mm	4μm
348-001-02	0-13mm	4μm
348-001-03	0-13mm	4μm

SERIES 389 ELECTRONIC INDICATING MICROMETER

Charge IP54

VIDEO



389-001-02WF

- Indicator: range ±0.04mm, accuracy ±1μm
- IP54 protection level
- Buttons: zero, on/off, data output, mm/inch, tolerance monitoring on/off, display interface setting, wireless transmission setting, selection of wireless transmission modes
- Automatic power off
- Power: rechargeable battery, for 20 hours continuous working(full charge)
- Supplied with setting standards (except 0-25mm)

unit: mm

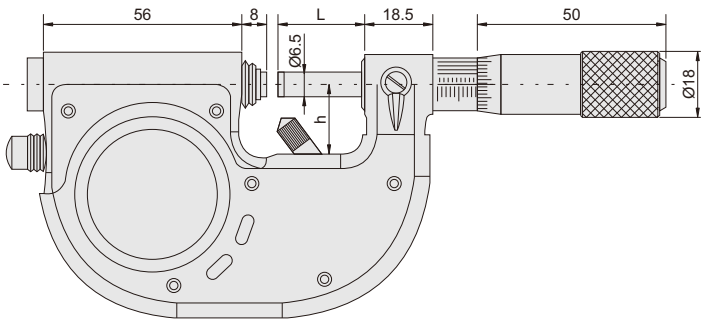

Cable (included)



Reverse side

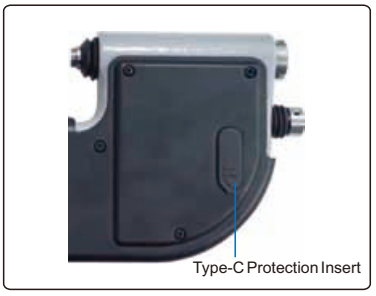

Setting standards(included)



Indicator resolution 0.5μm

Code	Micrometer head range	Micrometer head graduation	Micrometer head accuracy	L	h	Setting standards (included)	Remark
389-001-05	0-25mm	0.002mm	3μm	28	19	-	without data transmission
389-002-05	25-50mm	0.002mm	3μm	53	35	25mm	
389-003-05	50-75mm	0.002mm	4μm	79	47	50mm	
389-004-05	75-100mm	0.002mm	4μm	104	60	75mm	

Indicator resolution 0.2μm

Code	Micrometer head range	Micrometer head graduation	Micrometer head accuracy	L	h	Setting standards (included)	Remark
389-001-02WF	0-25mm	0.002mm	3μm	28	19	-	with data transmission (by USB or blue-tooth)
389-002-02WF	25-50mm	0.002mm	3μm	53	35	25mm	
389-003-02WF	50-75mm	0.002mm	4μm	79	47	50mm	
389-004-02WF	75-100mm	0.002mm	4μm	104	60	75mm	

SERIES 349 INDICATING MICROMETER

- Dial indicator: range 40µm, graduation 0.001mm, accuracy 0.001mm
- Carbide measuring faces
- Supplied with setting standards (except 0-25mm)



349-001-01

unit: mm

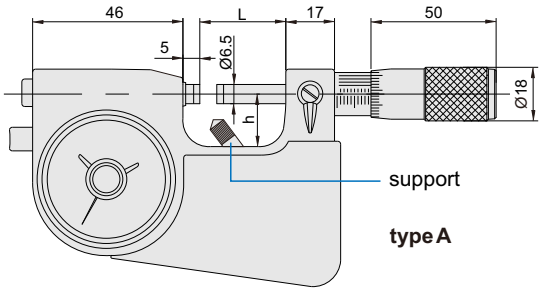

type A



349-001-02

Setting standards(included)



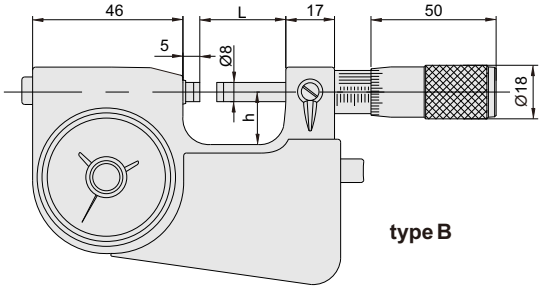

type B

Code	Micrometer head range	Micrometer head graduation	Micrometer head accuracy	Type	L	h	Setting standards (included)	Support
349-001-01	0-25mm	0.002mm	4µm	A	28.5	19	-	with
349-002-01	25-50mm	0.002mm	4µm	A	53.5	30	25mm	with
349-003-01	50-75mm	0.002mm	5µm	A	78.5	45	50mm	without
349-004-01	75-100mm	0.002mm	5µm	A	103.5	57	75mm	without
349-005-01	100-125mm	0.002mm	5µm	A	128.5	69	100mm	without
349-006-01	125-150mm	0.002mm	5µm	A	153.5	82	125mm	without
349-007-01	150-175mm	0.002mm	5µm	A	178.5	94	150mm	without
349-008-01	175-200mm	0.002mm	5µm	A	202.5	106	175mm	without
349-001-02	0-25mm	0.002mm	4µm	B	28.5	19	-	without

SERIES 349 DIAL SNAP GAUGE

IP54

- Quick measurement for mass production
- Dial indicator: range ±0.04mm, graduation 0.001mm, accuracy 0.001mm
- IP54 dust/waterproof
- Measuring force: 5-10N
- Carbide measuring faces



349-001-21

unit: mm

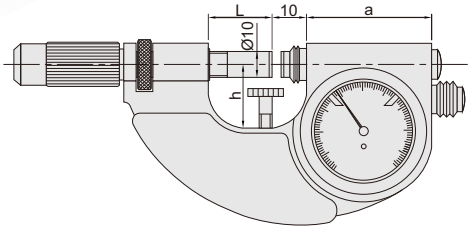

Code	Range	a	h	L	Setting standards (included)
349-001-21	0-25mm	50.5	25	28.5	-
349-002-22	25-50mm	50.5	35	53.5	25mm
349-003-23	50-75mm	50.5	47.5	78.5	50mm
349-004-24	75-100mm	50.5	60	103.5	75mm
349-005-25	100-125mm	56.5	69	127.5	100mm
349-006-26	125-150mm	56.5	82.5	152	125mm

Setting standards(included)



SERIES 430 MICROMETER WITH DIAL INDICATOR

ATTENTION: NOT SUITABLEFOR 0.001mm DIAL INDICATORS

- Meet DIN863-3
- Micrometer head graduation 0.01mm
- Anvil retracting range: 8mm
- Carbide measuring faces
- Supplied with setting standards (except 0-25mm)
- Optional accessory: dial indicators (graduation 0.01mm), digital indicators (resolution 0.01mm/0.0005")



dial indicator is optional

430-002-21

unit: mm

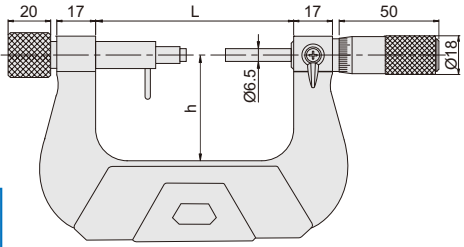

Setting standards (included)



Code	Micrometer head range	Micrometer head accuracy	h	L	Setting standards (included)
430-001-21	0-25mm	4μm	38	67	-
430-002-21	25-50mm	4μm	50	92.5	25mm
430-003-21	50-75mm	5μm	62	117.5	50mm
430-004-21	75-100mm	5μm	70	143	75mm
430-005-21	100-125mm	6μm	82	168	100mm
430-006-21	125-150mm	6μm	94.5	192	125mm
430-007-21	150-175mm	7μm	107	217	150mm

Optional indicators **(optional)**



211-010-13 **222-010-11**

347 SHEET METAL MICROMETER

- Measure thickness of sheet metal, paper, plastic and rubber parts
- Graduation 0.01mm
- Ratchet stop
- Carbide measuring faces



347-001-01

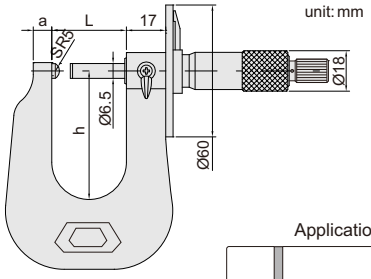

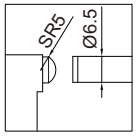

Application

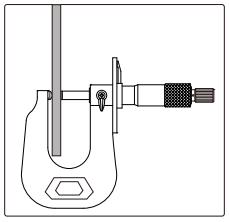

Code	Range	Accuracy	a	h	L
347-015-01	0-15mm	4μm	8	50	22
347-001-01	0-25mm	4μm	8	50	32
347-002-01	0-50mm	5μm	12	100	57

370 WIRE MICROMETER

- Measure diameter of wires and small balls
- Graduation 0.01mm
- Ratchet stop
- Carbide measuring faces



unit: mm

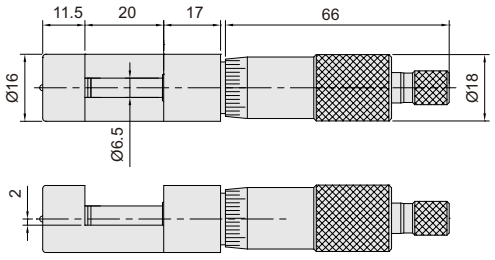



Code	Range	Accuracy
370-010-01	0-10mm	4μm

379 LONG SPINDLE OUTSIDE MICROMETER

- Graduation 0.01mm
- Ratchet stop
- Carbide measuring faces



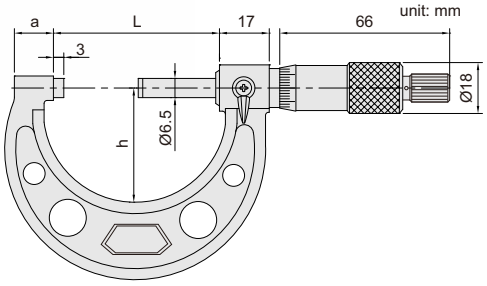

Code	Range	Accuracy	L	a	h
379-001-01	0-25mm	4μm	57	14	38

SERIES 305 NON MAGNETIC MICROMETER

Non-magnetic

- Suitable for magnetic materials
- Graduation: 0.01 mm
- Non magnetic carbide measuring faces
- Ratchet stop
- Supplied with setting standards (except 0-25mm)



305-001-01

Setting standards(included)



unit: mm

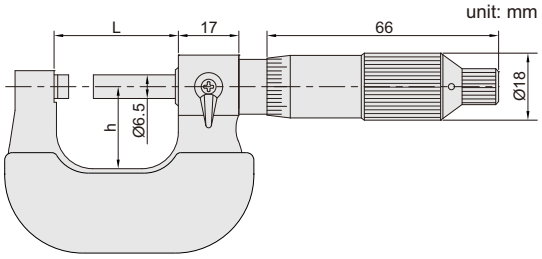

Code	Range	Accuracy	L	h	Setting standards (included)
305-001-01	0-25mm	4μm	32	24	-
305-002-01	25-50mm	4μm	57	32	25
305-003-01	50-75mm	5μm	82	45	50
305-004-01	75-100mm	5μm	105	57	75

SERIES 369 QUICK FEEDING OUTSIDE MICROMETER

- Graduation 0.01mm
- 1mm feeding of each turn
- Friction thimble
- Carbide measuring faces
- Meet DIN863-1
- Supplied with setting standards (except 0-25mm)



369-001-01

unit: mm

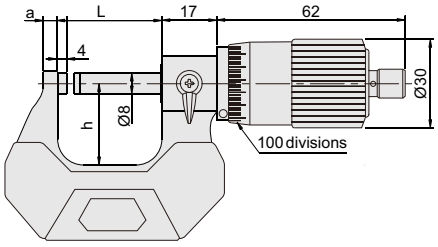

Code	Range	Accuracy	a	h	L	Setting standards (included)
369-001-01	0-25mm	4μm	6	24	32	-
369-002-01	25-50mm	4μm	8	32	57	25mm
369-003-01	50-75mm	5μm	8	45	82	50mm
369-004-01	75-100mm	5μm	8	57	107	75mm
369-005-01	100-125mm	6μm	8	70	133	100mm
369-006-01	125-150mm	6μm	8	82	158	125mm
369-007-01	150-175mm	7μm	8	95	183	150mm
369-008-01	175-200mm	7μm	8	107	209	175mm

Setting standards (included)



SERIES 307 DIGITAL DISK BRAKE MICROMETER

Data output IP65

- Measure thickness of disk brakes
- Resolution: 0.001mm/0.00005"
- IP65 protection level
- Button: on/off, mm/inch,set, zero
- Data output
- Automatic power off
- Ratchet stop
- Carbide measuring faces
- Supplied with setting standards



307-001-01

unit: mm

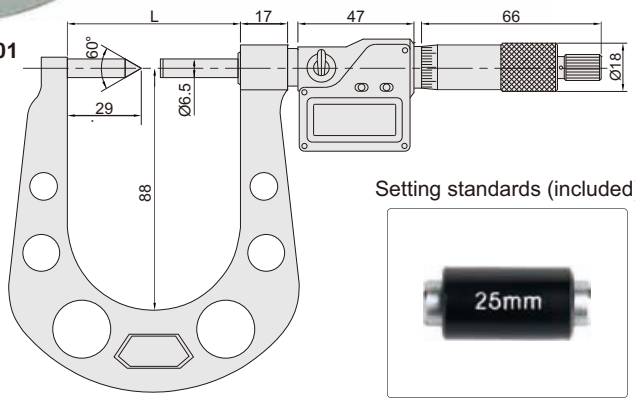

Setting standards (included)

Code	Range	Accuracy	L	Setting standards (included)
307-001-01	7.6-33mm	±5μm	64.5	25mm
307-002-01	25-50mm	±5μm	82	25mm

SERIES 306 DISK BRAKE MICROMETER

- Measure thickness of disk brakes
- Graduation: 0.01mm
- Ratchet stop
- Carbide measuring faces
- Supplied with setting standards

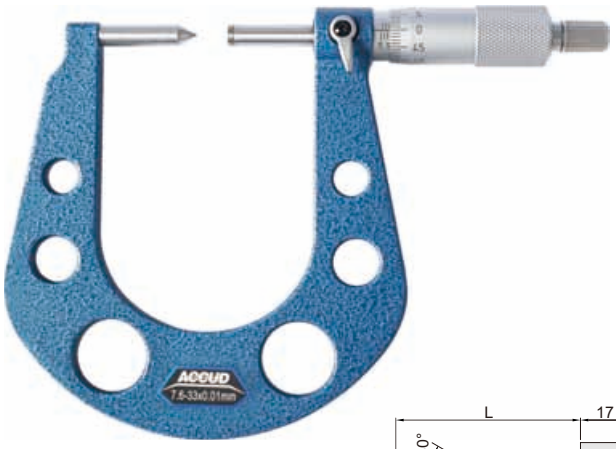

306-001-01

Setting standards (included)



unit: mm

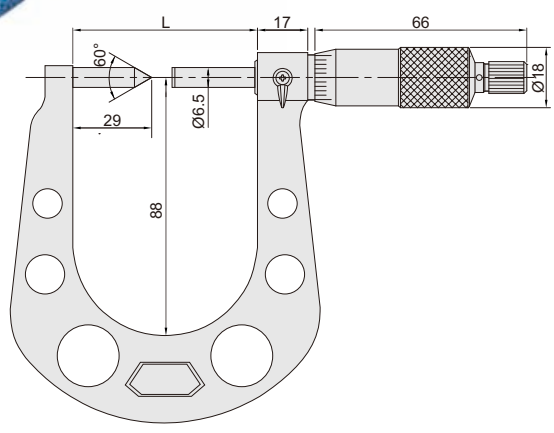

Code	Range	Accuracy	L	Setting standards (included)
306-001-01	7.6-33mm	5μm	64.5	25mm
306-002-01	25-50mm	5μm	82	25mm

SERIES 376 DIGITAL MICROMETER HEAD

IP65 Data output

- Resolution 0.001mm/0.00005"
- IP65 protection level
- Button: on/off, set, mm/inch, ABS/INC, data output
- Automatic power off
- Data output
- Ratchet stop



376-001-04

unit: mm

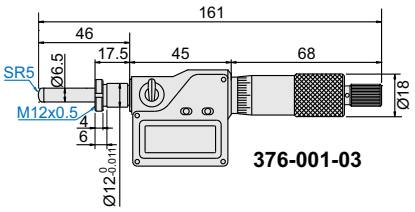

376-001-03

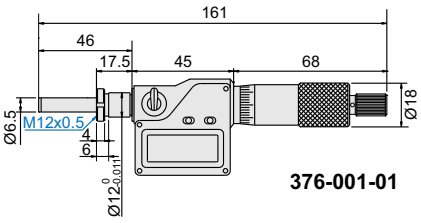

376-001-01

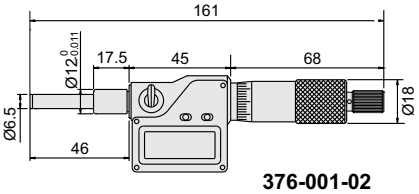

376-001-02

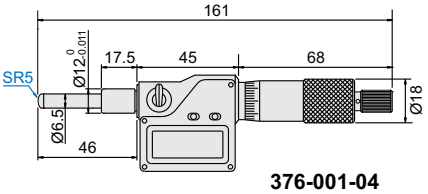

376-001-04

Rotating spindle

Code	Range	Accuracy	Stem	Spindle tip
376-001-01	0-25mm/0-1"	±2μm	with clamp nut	flat(carbide)
376-001-02	0-25mm/0-1"	±2μm	plain	flat(carbide)
376-001-03	0-25mm/0-1"	±2μm	with clamp nut	spherical(SR5)
376-001-04	0-25mm/0-1"	±2μm	plain	spherical(SR5)

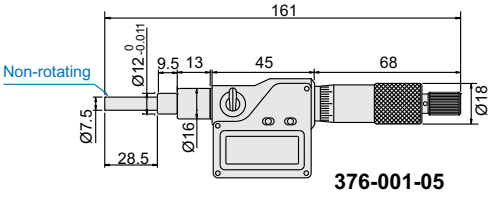

376-001-05

Non-rotating spindle

Code	Range	Accuracy	Stem	Spindle tip
376-001-05	0-25mm/0-1"	±2μm	plain	flat(carbide)

SERIES 376 DIGITAL MICROMETER HEAD

IP65 Data output

- Resolution 0.001mm/0.00005"
- IP65 protection level
- Button: on/off, set, mm/inch, ABS/INC, data output
- Automatic power off
- Data output
- Ratchet stop



376-002-03

unit: mm

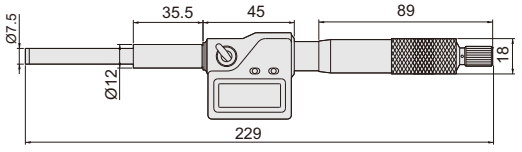

376-002-03

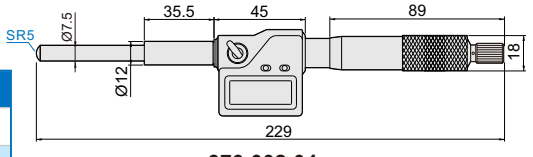

376-002-04

Code	Range	Accuracy	Stem	Spindle tip
376-002-03	0-50mm/0-2"	4μm	plain	flat (carbide)
376-002-04	0-50mm/0-2"	4μm	plain	spherical (SR5)

SERIES 371 MICROMETER HEAD

- Graduation: 0.01mm
- Carbide measuring faces
- Ratchet stop



371-001-02

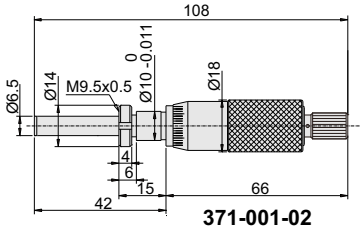

371-001-02

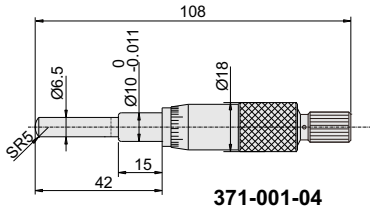

371-001-04

unit: mm

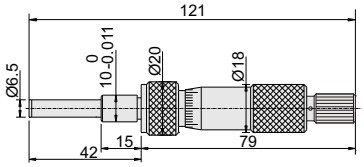

371-001-06

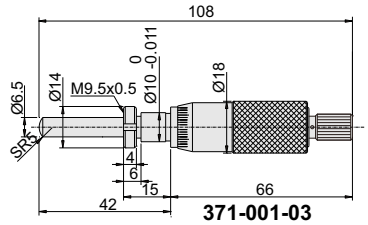

371-001-03

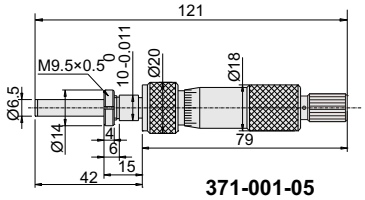

371-001-05

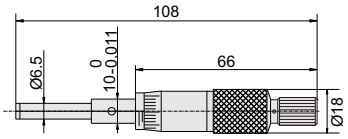

371-001-11

Code	Range	Accuracy	Stem	Spindle tip	Remark
371-001-02	0-25mm	3μm	with clamp nut	flat (carbide)	
371-001-03	0-25mm	3μm	with clamp nut	spherical (SR5)	
371-001-04	0-25mm	3μm	plain	spherical (SR5)	
371-001-05	0-25mm	3μm	with clamp nut	flat (carbide)	with spindle lock
371-001-06	0-25mm	3μm	plain	flat (carbide)	with spindle lock
371-001-11	0-25mm	3μm	plain	flat (carbide)	



371-002-11

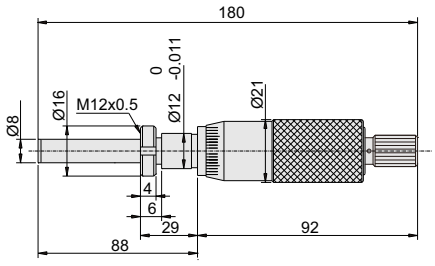

371-002-02

unit: mm

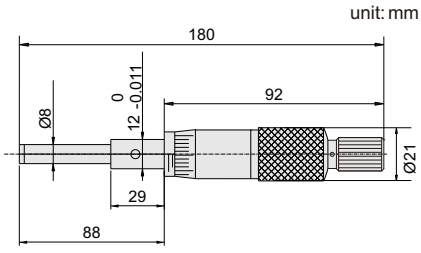

371-002-11

Code	Range	Accuracy	Stem	Spindle tip
371-002-02	0-50mm	5μm	with clamp nut	flat (carbide)
371-002-11	0-50mm	5μm	plain	flat (carbide)

SERIES 373 MICROMETER HEAD

- Graduation 0.01mm



373-001-01

unit: mm

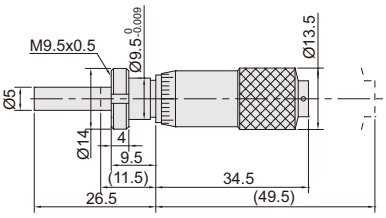

373-001-01

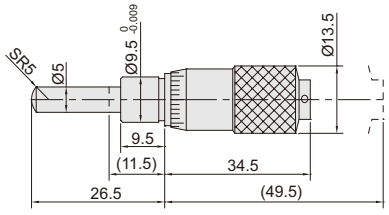

373-001-04

Code	Range	Accuracy	Stem	Spindle tip
373-001-01	0-15mm	3μm	with clamp nut	flat
373-001-02	0-15mm	3μm	plain	flat
373-001-03	0-15mm	3μm	with clamp nut	spherical (SR5)
373-001-04	0-15mm	3μm	plain	spherical (SR5)

SERIES 373 MICROMETER HEAD



373-013-02



373-013-05

unit: mm

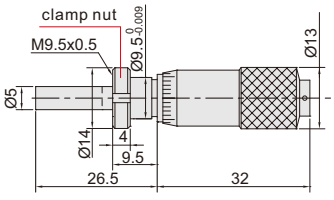

373-013-01

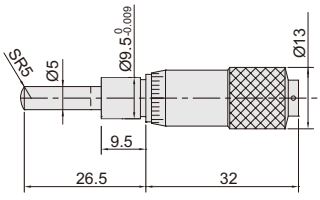

373-013-04

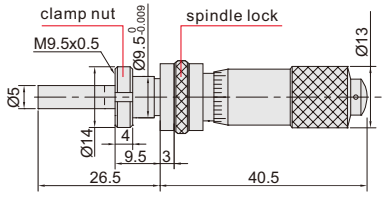

373-013-05

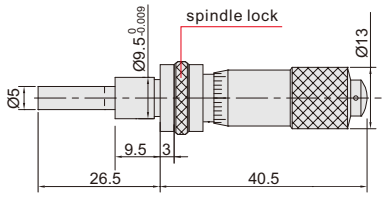

373-013-06

Code	Range	Accuracy	Stem	Spindle tip	Remark
373-013-01	0-13mm	3μm	with clamp nut	flat	
373-013-02	0-13mm	3μm	plain	flat	
373-013-03	0-13mm	3μm	with clamp nut	spherical (SR5)	
373-013-04	0-13mm	3μm	plain	spherical (SR5)	
373-013-05	0-13mm	3μm	with clamp nut	flat	with spindle lock
373-013-06	0-13mm	3μm	plain	flat (carbide)	with spindle lock

- Meet DIN863-2
- Graduation 0.01mm

SERIES 321 MICROMETER SETTING STANDARD

- For standard value setting



321-004-ST

unit: mm



type A



321-015-ST

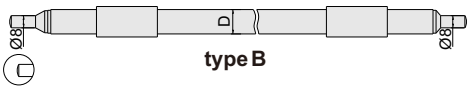

type B



321-042-ST

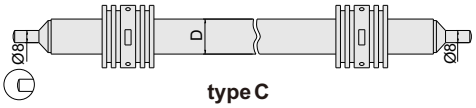

type C

Code	Length	Accuracy	D	Type
321-001-ST	25mm	±1.5μm	Ø7mm	A
321-002-ST	50mm	±2μm	Ø7mm	A
321-003-ST	75mm	±2.5μm	Ø7mm	A
321-004-ST	100mm	±3μm	Ø8mm	A
321-005-ST	125mm	±3.5μm	Ø8mm	A
321-006-ST	150mm	±4μm	Ø8mm	A
321-007-ST	175mm	±4.5μm	Ø8mm	A
321-008-ST	200mm	±5μm	Ø8mm	A
321-009-ST	225mm	±5.5μm	Ø8mm	A
321-010-ST	250mm	±6μm	Ø8mm	A
321-011-ST	275mm	±6.5μm	Ø8mm	A
321-012-ST	300mm	±7μm	Ø16mm	B
321-013-ST	325mm	±7.5μm	Ø16mm	B
321-014-ST	350mm	±8μm	Ø16mm	B
321-015-ST	375mm	±8.5μm	Ø16mm	B
321-016-ST	400mm	±9μm	Ø16mm	B
321-017-ST	425mm	±9.5μm	Ø16mm	B
321-018-ST	450mm	±10μm	Ø16mm	B
321-019-ST	475mm	±10.5μm	Ø16mm	B
321-020-ST	500mm	±11μm	Ø16mm	B
321-021-ST	525mm	±11.5μm	Ø16mm	B
321-022-ST	550mm	±12μm	Ø16mm	B
321-023-ST	575mm	±12.5μm	Ø16mm	B
321-024-ST	600mm	±13μm	Ø16mm	B
321-025-ST	625mm	±13.5μm	Ø16mm	B
321-026-ST	650mm	±14μm	Ø16mm	B
321-027-ST	675mm	±14.5μm	Ø16mm	B

Code	Length	Accuracy	D	Type
321-028-ST	700mm	±15μm	Ø16mm	B
321-029-ST	725mm	±15.5μm	Ø16mm	B
321-030-ST	750mm	±16μm	Ø16mm	B
321-031-ST	775mm	±16.5μm	Ø16mm	B
321-032-ST	800mm	±17μm	Ø16mm	B
321-033-ST	825mm	±17.5μm	Ø16mm	B
321-034-ST	850mm	±18μm	Ø16mm	B
321-035-ST	875mm	±18.5μm	Ø16mm	B
321-036-ST	900mm	±19μm	Ø16mm	B
321-037-ST	925mm	±19.5μm	Ø16mm	B
321-038-ST	950mm	±20μm	Ø16mm	B
321-039-ST	975mm	±20.5μm	Ø16mm	B
321-040-ST	1000mm	±21μm	Ø16mm	B
321-042-ST	1050mm	±22μm	Ø23mm	C
321-046-ST	1150mm	±24μm	Ø23mm	C
321-050-ST	1250mm	±26μm	Ø23mm	C
321-054-ST	1350mm	±28μm	Ø23mm	C
321-058-ST	1450mm	±30μm	Ø23mm	C
321-062-ST	1550mm	±32μm	Ø23mm	C
321-066-ST	1650mm	±34μm	Ø23mm	C
321-070-ST	1750mm	±36μm	Ø23mm	C
321-074-ST	1850mm	±38μm	Ø23mm	C
321-078-ST	1950mm	±40μm	Ø23mm	C

SERIES 324 INCH MICROMETER SETTING STANDARD

- For standard value setting



324-004-ST



324-012-ST



type A

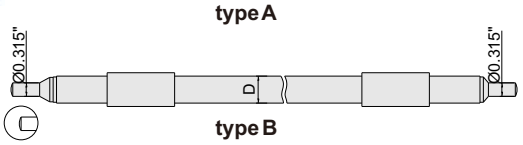

type B

Code	Length	Accuracy	D	Type
324-001-ST	1"	±0.00006"	Ø0.276"	A
324-002-ST	2"	±0.00008"	Ø0.276"	A
324-003-ST	3"	±0.00010"	Ø0.276"	A
324-004-ST	4"	±0.00012"	Ø0.315"	A
324-005-ST	5"	±0.00014"	Ø0.315"	A
324-006-ST	6"	±0.00016"	Ø0.315"	A
324-007-ST	7"	±0.00018"	Ø0.315"	A
324-008-ST	8"	±0.00020"	Ø0.315"	A
324-009-ST	9"	±0.00022"	Ø0.315"	A
324-010-ST	10"	±0.00024"	Ø0.315"	A
324-011-ST	11"	±0.00026"	Ø0.315"	A
324-012-ST	12"	±0.00028"	Ø0.630"	B
324-013-ST	13"	±0.00030"	Ø0.630"	B
324-014-ST	14"	±0.00032"	Ø0.630"	B
324-015-ST	15"	±0.00034"	Ø0.630"	B
324-016-ST	16"	±0.00036"	Ø0.630"	B
324-017-ST	17"	±0.00038"	Ø0.630"	B
324-018-ST	18"	±0.00040"	Ø0.630"	B
324-019-ST	19"	±0.00042"	Ø0.630"	B
324-020-ST	20"	±0.00044"	Ø0.630"	B

Code	Length	Accuracy	D	Type
324-021-ST	21"	±0.00046"	Ø0.630"	B
324-022-ST	22"	±0.00048"	Ø0.630"	B
324-023-ST	23"	±0.00050"	Ø0.630"	B
324-024-ST	24"	±0.00052"	Ø0.630"	B
324-025-ST	25"	±0.00054"	Ø0.630"	B
324-026-ST	26"	±0.00056"	Ø0.630"	B
324-027-ST	27"	±0.00058"	Ø0.630"	B
324-028-ST	28"	±0.00060"	Ø0.630"	B
324-029-ST	29"	±0.00062"	Ø0.630"	B
324-030-ST	30"	±0.00064"	Ø0.630"	B
324-031-ST	31"	±0.00066"	Ø0.630"	B
324-032-ST	32"	±0.00068"	Ø0.630"	B
324-033-ST	33"	±0.00070"	Ø0.630"	B
324-034-ST	34"	±0.00072"	Ø0.630"	B
324-035-ST	35"	±0.00074"	Ø0.630"	B
324-036-ST	36"	±0.00076"	Ø0.630"	B
324-037-ST	37"	±0.00078"	Ø0.630"	B
324-038-ST	38"	±0.00080"	Ø0.630"	B
324-039-ST	39"	±0.00082"	Ø0.630"	B
324-040-ST	40"	±0.00084"	Ø0.630"	B

SERIES 343 SCREW THREAD MICROMETER SETTING STANDARD

- For screw thread micrometer (series 333 or 343)



343-001-ST



343-001-ST1

unit: mm





55° thread angle

Code	Length	Accuracy
343-001-ST	25mm	±3μm
343-002-ST	50mm	±3.5μm
343-003-ST	75mm	±4μm
343-004-ST	100mm	±4.5μm
343-005-ST	125mm	±5μm
343-006-ST	150mm	±5.5μm
343-007-ST	175mm	±6μm
343-008-ST	200mm	±6μm
343-009-ST	225mm	±6.5μm
343-010-ST	250mm	±7μm
343-011-ST	275mm	±7μm
343-012-ST	300mm	±7.5μm

60° thread angle

Code	Length	Accuracy
343-001-ST1	25mm	±3μm
343-002-ST1	50mm	±3.5μm
343-003-ST1	75mm	±4μm
343-004-ST1	100mm	±4.5μm
343-005-ST1	125mm	±5μm
343-006-ST1	150mm	±5.5μm
343-007-ST1	175mm	±6μm
343-008-ST1	200mm	±6μm
343-009-ST1	225mm	±6.5μm
343-010-ST1	250mm	±7μm
343-011-ST1	275mm	±7μm
343-012-ST1	300mm	±7.5μm



530-0195-11



530-0195-12

- Used with standard outside micrometers to measure pitch diameter of screw threads
- Diameter accuracy: ±0.5μm
- Cylindricity: 1μm
- Hardness: HRC60
- Scope of application: outside diameter of thread ≤50mm

unit: mm

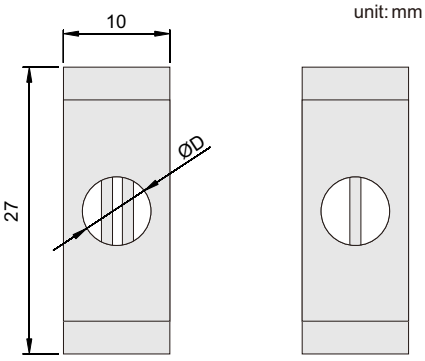

Application



For outside micrometers with spindle Ø6.35mm (ØD)

Code	Pin gage diameter	Applicable pitch
530-0170-11	Ø0.170mm	0.2mm, 0.25mm, 0.3mm
530-0195-11	Ø0.195mm	0.35mm
530-0220-11	Ø0.220mm	0.4mm
530-0250-11	Ø0.250mm	0.45mm
530-0290-11	Ø0.290mm	0.5mm
530-0335-11	Ø0.335mm	0.6mm
530-0390-11	Ø0.390mm	0.7mm
530-0455-11	Ø0.455mm	0.75mm,0.8mm
530-0530-11	Ø0.530mm	0.9mm
530-0620-11	Ø0.620mm	1.0mm
530-0725-11	Ø0.725mm	1.25mm
530-0895-11	Ø0.895mm	1.5mm
530-1100-11	Ø1.100mm	1.75mm,2.0mm
530-1350-11	Ø1.350mm	2.5mm
530-1650-11	Ø1.650mm	3.0mm
530-2050-11	Ø2.050mm	3.5mm
530-2550-11	Ø2.550mm	4mm, 4.5mm
530-3200-11	Ø3.200mm	5mm, 5.5mm, 6mm
530-018-11	18 pairs/set, including all above 3-wires	

For outside micrometers with spindle Ø6.50mm (ØD)

Code	Pin gage diameter	Applicable pitch
530-0170-12	Ø0.170mm	0.2mm, 0.25mm, 0.3mm
530-0195-12	Ø0.195mm	0.35mm
530-0220-12	Ø0.220mm	0.4mm
530-0250-12	Ø0.250mm	0.45mm
530-0290-12	Ø0.290mm	0.5mm
530-0335-12	Ø0.335mm	0.6mm
530-0390-12	Ø0.390mm	0.7mm
530-0455-12	Ø0.455mm	0.75mm,0.8mm
530-0530-12	Ø0.530mm	0.9mm
530-0620-12	Ø0.620mm	1.0mm
530-0725-12	Ø0.725mm	1.25mm
530-0895-12	Ø0.895mm	1.5mm
530-1100-12	Ø1.100mm	1.75mm,2.0mm
530-1350-12	Ø1.350mm	2.5mm
530-1650-12	Ø1.650mm	3.0mm
530-2050-12	Ø2.050mm	3.5mm
530-2550-12	Ø2.550mm	4mm, 4.5mm
530-3200-12	Ø3.200mm	5mm, 5.5mm, 6mm
530-018-12	18 pairs/set, including all above 3-wires	

387 MICROMETER MEASURING FORCE DETECTOR

- For outside micrometers 0-25mm, 25-50mm, 50-75mm and 75-100mm



unit: mm

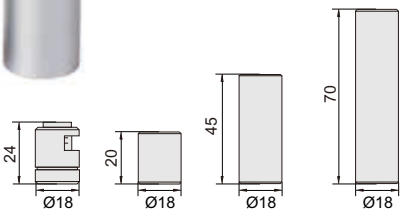

Code	Measuring force
387-000-00	5-12N

SERIES 553 OPTICAL FLAT

- Check the flatness of measuring faces
- Single working face,the arrow indicates the working face



553-045-01

unit: mm

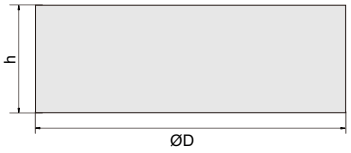



Code	Flatness	Parallels included(h)	ØD
553-045-01	0.03μm	15mm	45
553-060-01	0.03μm	20mm	60
553-080-01	0.05μm	20mm	80
553-100-01	0.05μm	25mm	100
553-150-01	0.05μm	30mm	150
553-200-01	0.08μm	40mm	200

SERIES 551 OPTICAL PARALLEL

- Check the flatness and parallelism of measuring faces of micrometer
- Flatness of A and B ≤ 0.1μm
- Parallelism between A and B ≤ 0.6μm



551-001-02

unit: mm

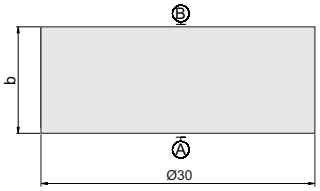

Application



micrometer is optional

Code	Parallels included
551-001-02	12, 12.12, 12.25, 12.37mm
551-002-02	25, 25.12, 25.25, 25.37mm

SERIES 551 OPTICAL PARALLELS



551-001-01

unit: mm

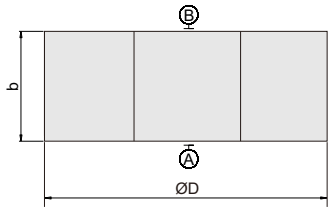

- Check the flatness and parallelism of measuring faces of micrometer
- Flatness of A and B: 0.03μm
- Parallelism between A and B: 0.6μm

Application



micrometer is optional

Code	Parallels included (b)	ØD	Applicable micrometer
551-001-01	15.62mm,15.75mm,15.87mm,16.00mm	30	0-25mm
551-002-01	40.62mm,40.75mm,40.87mm,41.00mm	30	25-50mm
551-003-01	65.62mm,65.75mm,65.87mm,66.00mm	40	50-75mm
551-004-01	90.62mm,90.75mm,90.87mm,91.00mm	50	75-100mm

381 MICROMETER STAND

- For micrometers which measuring range is less than 100mm



Application



micrometer is optional

unit: mm

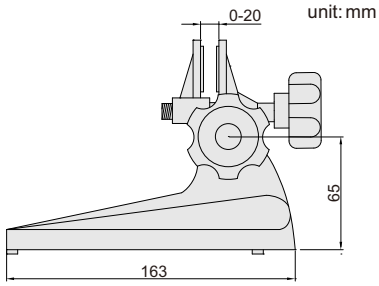

Code
381-000-00

383 MICROMETER STAND

- For micrometers which measuring range is less than 100mm



Application



micrometer is optional

unit: mm

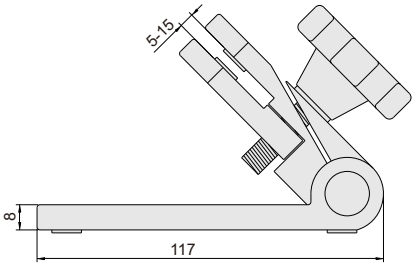

Code
383-000-00

383 MICROMETER STAND

- Material : ZincAlloy
- For micrometers which measuring range is less than 100mm



Application



micrometer is optional

unit: mm

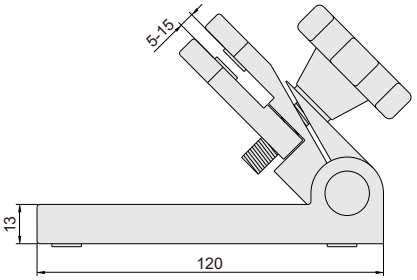

Code
383-000-60P

SERIES 361 DIGITAL THREE POINTS INSIDE MICROMETER

Certificate | Data output | IP65

- Resolution: 0.001mm/0.00005"
- IP65 protection level
- Button: on/off, set, mm/inch, ABS/INC, data output
- Automatic power off
- Data output
- Ratchet stop
- Carbide measuring faces (over 12mm series)
- Extension rod are included
- Setting rings are included (Range<100mm)

VIDEO



361-002-01



361-007-01

unit: mm

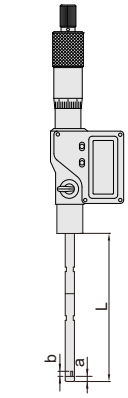

Range 6-20mm

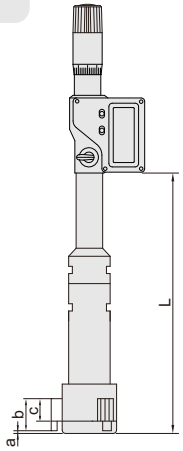

Range 20-50mm

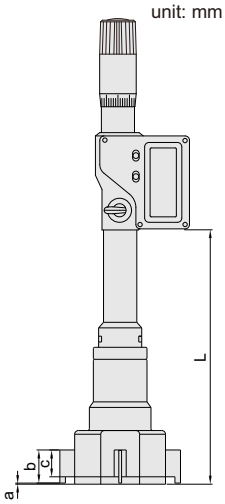

Range 50-300mm

Code	Range	Accuracy	Setting ring	Extension rod	a	b	c	L
361-001-01*	6-8mm/0.24-0.31"	4μm	Ø6mm(included)	100mm	1.5	2.5	/	57
361-002-01*	8-10mm/0.31-0.39"	4μm	Ø8mm(included)	100mm	1.5	2.5	/	57
361-003-01*	10-12mm/0.39-0.47"	4μm	Ø10mm(included)	100mm	1.5	2.5	/	57
361-004-01*	12-16mm/0.47-0.63"	4μm	Ø16mm(included)	150mm	0.5	6	4.5	72
361-005-01*	16-20mm/0.63-0.79"	4μm	Ø16mm(included)	150mm	0.5	6	4.5	72
361-006-01*	20-25mm/0.79-0.98"	4μm	Ø25mm(included)	150mm	0.5	8	6	105
361-007-01*	25-30mm/0.98-1.18"	4μm	Ø25mm(included)	150mm	0.5	8	6	105
361-008-01*	30-40mm/1.18-1.57"	4μm	Ø40mm(included)	150mm	0.5	14	12	110
361-009-01*	40-50mm/1.57-1.97"	5μm	Ø40mm(included)	150mm	0.5	14	12	110
361-010-01*	50-63mm/1.97-2.48"	5μm	Ø62mm(included)	150mm	0.5	17.5	14.5	127
361-011-01*	62-75mm/2.44-2.95"	5μm	Ø62mm(included)	150mm	0.5	17.5	14.5	127
361-012-01*	75-88mm/2.95-3.46"	5μm	Ø87mm(included)	150mm	0.5	17.5	14.5	127
361-013-01*	87-100mm/3.43-3.94"	5μm	Ø87mm(included)	150mm	0.5	17.5	14.5	127
361-014-01	100-125mm/3.94-4.92"	6μm	optional	150mm	0.9	29	25	175
361-015-01	125-150mm/4.92-5.91"	6μm	optional	150mm	0.9	29	25	175
361-016-01	150-175mm/5.91-6.89"	7μm	optional	150mm	0.9	29	25	175
361-017-01	175-200mm/6.89-7.87"	7μm	optional	150mm	0.9	29	25	175
361-018-01	200-225mm/7.87-8.86"	8μm	optional	150mm	0.9	29	25	175
361-019-01	225-250mm/8.86-9.84"	8μm	optional	150mm	0.9	29	25	175
361-020-01	250-275mm/9.84-10.83"	9μm	optional	150mm	0.9	29	25	175
361-024-01	275-300mm/10.83-11.81"	9μm	optional	150mm	0.9	29	25	175

* With manufacturer inspection certificate

Setting ring

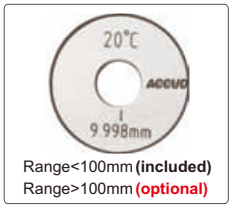

Range<100mm **(included)**
Range>100mm **(optional)**

Extension rod**(included)**



SERIES 361 DIGITAL TWO POINTS INSIDE MICROMETER

Certificate | Data output | IP65

- Resolution: 0.001mm/0.00005"
- IP65 protection level
- Button: on/off, set, mm/inch,ABS/INC, data output
- Automatic power off
- Data output
- Ratchet stop
- Carbide measuring faces
- Setting rings are included



361-000-50

unit: mm

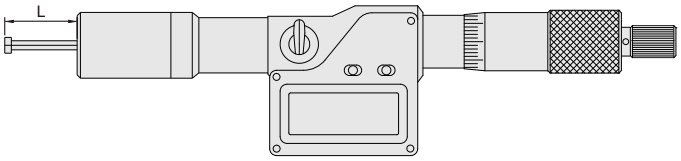

Code	Range	Accuracy	Setting ring	L
361-000-25	2-2.5mm/0.08-0.10"	6μm	Ø2.5mm	12
361-000-30	2.5-3mm/0.10-0.12"	6μm	Ø2.5mm	12
361-000-40	3-4mm/0.12-0.16"	6μm	Ø4mm	22
361-000-50	4-5mm/0.16-0.20"	6μm	Ø5mm	22
361-000-60	5-6mm/0.20-0.24"	6μm	Ø6mm	22

With manufacturer inspection certificate

Setting ring**(included)**



SERIES 361 DIGITAL TWO/THREE POINTS INSIDE MICROMETER SET

Certificate | Data output | IP65

Extension rod**(included)**



Setting ring**(included)**

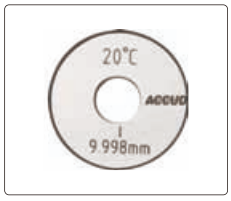

Digital two points inside micrometer set

Code	Range	Micrometers included	Setting ring
361-000-02	2-3mm/0.08-0.12"	2-2.5mm, 2.5-3mm	Ø2.5mm
361-000-03	3-6mm/0.12-0.24"	3-4mm, 4-5mm,5-6mm	Ø4mm,Ø5mm,Ø6mm

Digital three points inside micrometer set

Code	Range	Micrometers included	Setting ring	Extension rod
361-103-03	6-12mm	6-8, 8-10, 10-12mm	Ø6, Ø8, Ø10mm	100mm
361-305-03	12-20mm	12-16, 16-20mm	Ø16mm	150mm
361-509-05	20-50mm	20-25, 25-30, 30-40, 40-50mm	Ø25mm, Ø40mm	150mm
361-913-05	50-100mm	50-63, 62-75, 75-88, 87-100mm	Ø62mm, Ø87mm	150mm

With manufacturer inspection certificate



361-103-03

SERIES 362 THREE POINTS INSIDE MICROMETER

Certificate

- **6-12mm** graduation: 0.001mm
  Steel measuring faces
  12-300mm graduation: 0.005mm
  Carbide measuring faces
- Ratchet stop
- Extension rod are included
- Setting rings are included (Range<100mm)

unit: mm

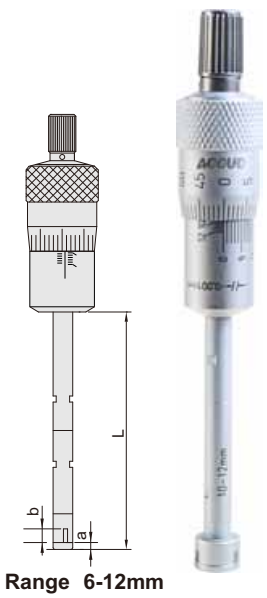

Range 6-12mm

362-003-01

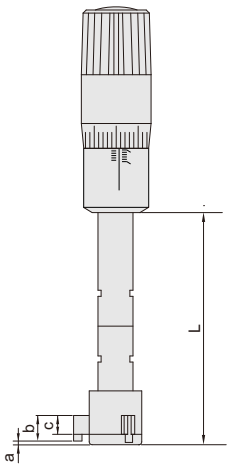

Range 12-50mm



362-008-01



362-014-01

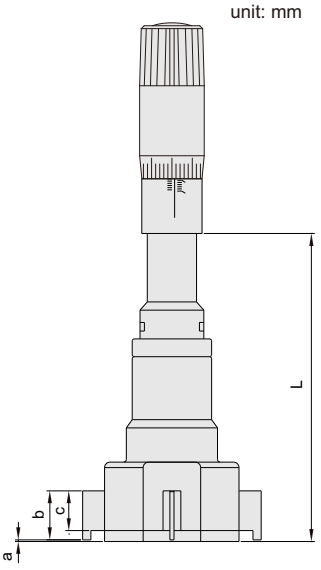

Range 50-300mm

Code	Range	Accuracy	Setting ring	Extension rod	a	b	c	L
362-001-01*	6-8mm	4μm	Ø6mm(included)	100mm	1.5	2.5	/	54.5
362-002-01*	8-10mm	4μm	Ø8mm(included)	100mm	1.5	2.5	/	54.5
362-003-01*	10-12mm	4μm	Ø10mm(included)	100mm	1.5	2.5	/	54.5
362-004-01*	12-16mm	4μm	Ø16mm(included)	150mm	0.5	6	4.5	80
362-005-01*	16-20mm	4μm	Ø16mm(included)	150mm	0.5	6	4.5	80
362-006-01*	20-25mm	4μm	Ø25mm(included)	150mm	0.5	8	6	90
362-007-01*	25-30mm	4μm	Ø25mm(included)	150mm	0.5	8	6	90
362-008-01*	30-40mm	4μm	Ø40mm(included)	150mm	0.5	14	12	97
362-009-01*	40-50mm	5μm	Ø40mm(included)	150mm	0.5	14	12	97
362-010-01*	50-63mm	5μm	Ø62mm(included)	150mm	0.5	17.5	14.5	114
362-011-01*	62-75mm	5μm	Ø62mm(included)	150mm	0.5	17.5	14.5	114
362-012-01*	75-88mm	5μm	Ø87mm(included)	150mm	0.5	17.5	14.5	114
362-013-01*	87-100mm	5μm	Ø87mm(included)	150mm	0.5	17.5	14.5	114
362-014-01	100-125mm	6μm	optional	150mm	0.9	29	25	155
362-015-01	125-150mm	6μm	optional	150mm	0.9	29	25	155
362-016-01	150-175mm	7μm	optional	150mm	0.9	29	25	155
362-017-01	175-200mm	7μm	optional	150mm	0.9	29	25	155
362-018-01	200-225mm	8μm	optional	150mm	0.9	29	25	155
362-019-01	225-250mm	8μm	optional	150mm	0.9	29	25	155
362-020-01	250-275mm	9μm	optional	150mm	0.9	29	25	155
362-024-01	275-300mm	9μm	optional	150mm	0.9	29	25	155

Setting ring



Range<100mm **(included)**
Range>100mm **(optional)**

Extension rod**(included)**



*** With manufacturer inspection certificate**

SERIES 362 TWO POINTS INSIDE MICROMETER

Certificate

- Graduation: 0.001mm
- Carbide measuring faces
- Ratchet stop
- Setting rings are included



362-000-25

unit: mm

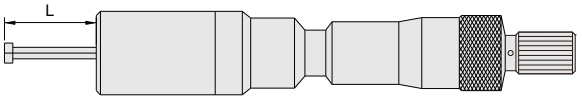

Code	Range	Accuracy	Setting ring	L
362-000-25	2-2.5mm	6μm	Ø2.5mm	12
362-000-30	2.5-3mm	6μm	Ø2.5mm	12
362-000-40	3-4mm	6μm	Ø4mm	22
362-000-50	4-5mm	6μm	Ø5mm	22
362-000-60	5-6mm	6μm	Ø6mm	22

With manufacturer inspection certificate

Setting ring**(included)**



SERIES 362 TWO/THREE POINTS INSIDE MICROMETER SET

Certificate



362-913-05

Two points inside micrometer set

Code	Range	Micrometers included	Setting ring
362-000-02	2-3mm	2-2.5mm, 2.5-3mm	Ø2.5mm
362-000-03	3-6mm	3-4mm, 4-5mm,5-6mm	Ø4mm,Ø5mm,Ø6mm

Three points inside micrometer set

Code	Range	Micrometers included	Setting ring	Extension rod
362-103-03	6-12mm	6-8, 8-10, 10-12mm	Ø6, Ø8, Ø10mm	100mm
362-305-03	12-20mm	12-16, 16-20mm	Ø16mm	150mm
362-509-05	20-50mm	20-25, 25-30, 30-40, 40-50mm	Ø25mm, Ø40mm	150mm
362-913-05	50-100mm	50-63, 62-75, 75-88, 87-100mm	Ø62mm, Ø87mm	150mm

With manufacturer inspection certificate

Extension rod**(included)**



Setting ring**(included)**

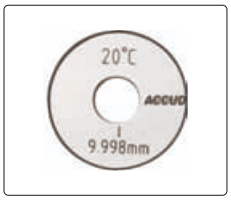

SERIES 363 WIDE RANGE THREE POINTS INTERNAL MICROMETER

Certificate

- Graduation 0.001mm
- Ratchet stop
- Carbide measuring faces
- Setting rings are included(except 200-300mm)

Setting ring





363-003-01

unit: mm

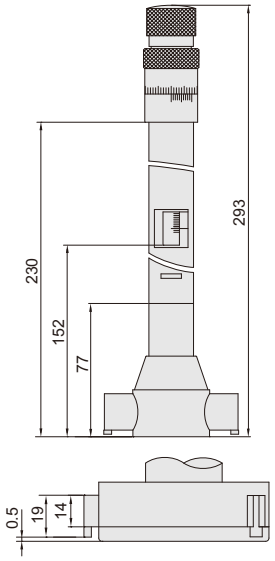

Code	Range	Accuracy	Setting ring
363-003-01 *	50-70mm	5μm	Ø50mm(included)
363-004-01 *	70-100mm	5μm	Ø70mm(included)
363-006-01	100-150mm	6μm	Ø100mm(included)
363-010-01	150-250mm	8μm	Ø150mm(included)
363-012-01	200-300mm	9μm	Ø200mm(optional)

* **With manufacturer inspection certificate**

SERIES 364 DIGITAL WIDE RANGE THREE POINTS INTERNAL MICROMETER

Certificate Data output IP54

- Resolution: 0.001mm/0.00005"
- IP54 protection level
- Buttons: on/off, set, mm/inch, ABS/INC
- Data output
- Automatic power off
- Carbide measuring faces
- Ratchet stop
- Supplied with extension rods
- Setting rings are included(except 200-300mm)



364-003-01

unit: mm

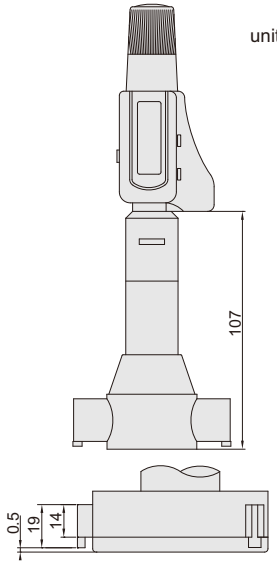

Code	Range	Accuracy	Setting ring	Extension rod
364-003-01 *	50-70mm/1.97-2.76"	5μm	Ø50mm(included)	150mm
364-004-01 *	70-100mm/2.76-3.94"	5μm	Ø70mm(included)	150mm
364-006-01	100-150mm/3.94-5.91"	6μm	Ø100mm(included)	150mm
364-010-01	150-250mm/5.91-9.84"	8μm	Ø150mm(included)	150mm
364-012-01	200-300mm/7.87-11.81"	9μm	Ø200mm(optional)	150mm

* **With manufacturer inspection certificate**

Extension rod**(included)**



Setting ring

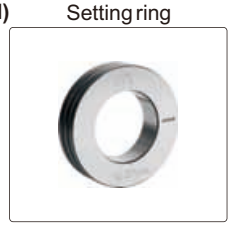

SERIES 365 PISTOL GRIP THREE POINTS BORE GAUGE

Data output | CR2032

- Optional accessory:
  digital indicator(code:series 211 or 216)
  setting ring(code: series 531)



365-007-01

216-010-01
digital indicator
is optional

unit: mm

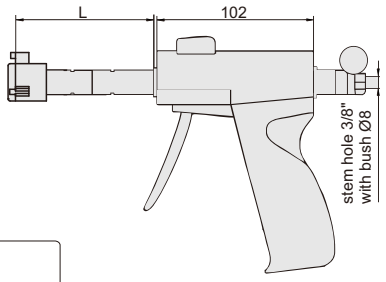

Extension rod **(included)**



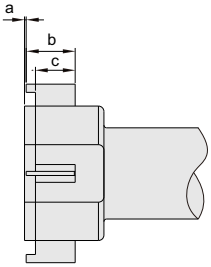

Range 50-300mm
carbide measuring faces

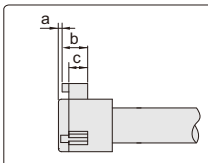

Range 12-50mm
carbide measuring faces

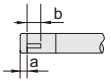

Range 6-12mm
steel measuring faces

INDIVIDUAL

Code	Range	Accuracy	Setting ring	Extension rod	a	b	c	L
365-001-01	6-8mm/0.275-0.35"	4μm	Ø6mm (included)	100mm	1.5	2.5	/	50
365-002-01	8-10mm/0.35-0.425"	4μm	Ø8mm (included)	100mm	1.5	2.5	/	50
365-003-01	10-12mm/0.425-0.5"	4μm	Ø10mm (included)	100mm	1.5	2.5	/	50
365-004-01	12-16mm/0.5-0.65"	4μm	Ø16mm (included)	150mm	0.5	6	4.5	65
365-005-01	16-20mm/0.65-0.8"	4μm	Ø16mm (included)	150mm	0.5	6	4.5	65
365-006-01	20-25mm/0.8-1"	4μm	Ø25mm (included)	150mm	0.5	8	6	91
365-007-01	25-30mm/1-1.2"	4μm	Ø25mm (included)	150mm	0.5	8	6	91
365-008-01	30-40mm/1.2-1.6"	4μm	Ø40mm (included)	150mm	0.5	14	12	97
365-009-01	40-50mm/1.6-2"	5μm	Ø40mm (included)	150mm	0.5	14	12	97
365-010-01	50-63mm/2-2.5"	5μm	Ø62mm (included)	150mm	0.5	17.5	14.5	112
365-011-01	62-75mm/2.5-3"	5μm	Ø62mm (included)	150mm	0.5	17.5	14.5	112
365-012-01	75-88mm/3-3.5"	5μm	Ø87mm (included)	150mm	0.5	17.5	14.5	112
365-013-01	87-100mm/3.5-4"	5μm	Ø87mm (included)	150mm	0.5	17.5	14.5	112
365-014-01	100-125mm/4-5"	6μm	**optional**	150mm	0.9	29	25	140
365-015-01	125-150mm/5-6"	6μm	**optional**	150mm	0.9	29	25	140
365-016-01	150-175mm/6-7"	7μm	**optional**	150mm	0.9	29	25	140
365-017-01	175-200mm/7-8"	7μm	**optional**	150mm	0.9	29	25	140
365-018-01	200-225mm/8-9"	8μm	**optional**	150mm	0.9	29	25	140
365-019-01	225-250mm/9-10"	8μm	**optional**	150mm	0.9	29	25	140
365-020-01	250-275mm/10-11"	9μm	**optional**	150mm	0.9	29	25	140
365-024-01	275-300mm/11-12"	9μm	**optional**	150mm	0.9	29	25	140

Setting ring



6-100mm **(included)**
100-300mm **(optional)**

Indicators **(optional)**



Series 211



Series 216

SET

Code	Range	Micrometers included	Setting ring (included)	Extension rod (included)
365-103-03	6-12mm	6-8, 8-10, 10-12mm	Ø6, Ø8, Ø10mm	100mm
365-305-03	12-20mm	12-16, 16-20mm	Ø16mm	150mm
365-509-05	20-50mm	20-25, 25-30, 30-40, 40-50mm	Ø25mm, Ø40mm	150mm
365-913-05	50-100mm	50-63, 62-75, 75-88, 87-100mm	Ø62mm, Ø87mm	150mm

SERIES 356 DIGITAL INSIDE MICROMETER

ATTENTION: LOW PARALLELISM OF TWO MEASURING FACES

Data output



356-001-01

unit: mm

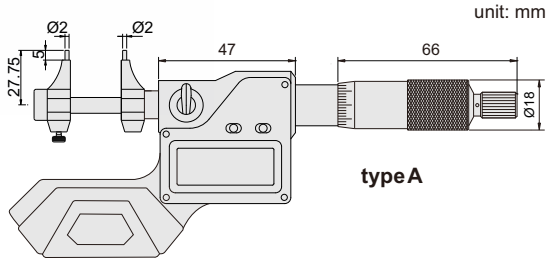

type A



356-002-01

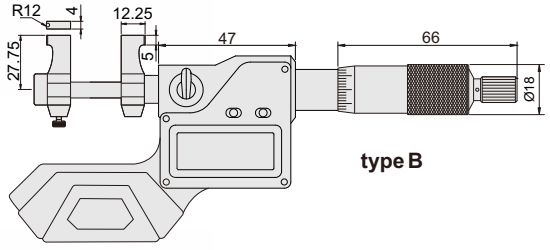

type B



356-003-01

- Resolution 0.001mm/0.00005"
- Button function: on/off, set, mm/inch, ABS/INC, data output
- Data output
- Automatic power off
- Ratchet stop
- Carbide measuring faces

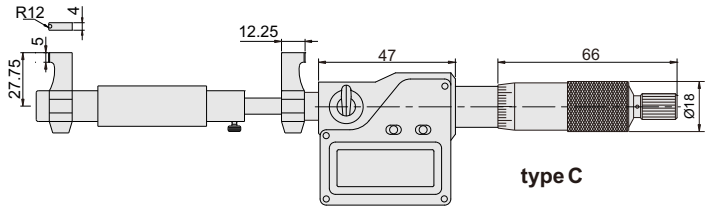

type C

Code	Range	Accuracy	Type	Setting ring
356-001-01	5-30mm/0.2-1.2"	±5µm	A	5mm
356-002-01	25-50mm/1-2"	±6µm	B	25mm
356-003-01	50-75mm/2-3"	±7µm	C	optional
356-004-01	75-100mm/3-4"	±8µm	C	optional
356-005-01	100-125mm/4-5"	±9µm	C	optional
356-006-01	125-150mm/5-6"	±9µm	C	optional
356-007-01	150-175mm/6-7"	±10µm	C	optional
356-008-01	175-200mm/7-8"	±10µm	C	optional

Setting ring



Range<50mm **(included)**



Range>50mm **(optional)**

SERIES 351 INSIDE MICROMETER

- Graduation: 0.01mm
- Carbide measuring faces
- Ratchet stop



351-001-01

type A unit: mm

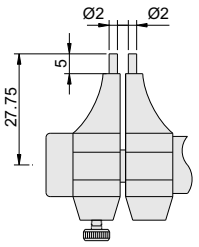



351-002-01

type B

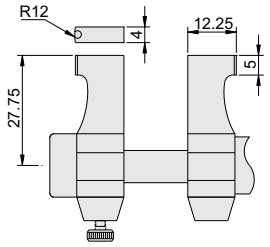



351-003-01

type C

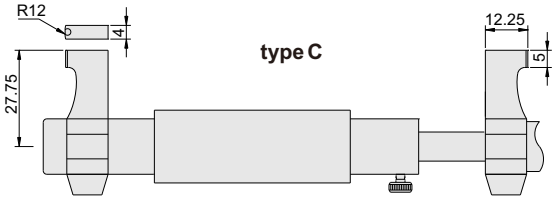

Code	Range	Accuracy	Type	Setting ring
351-001-01	5-30mm	7μm	A	5mm
351-002-01	25-50mm	8μm	B	25mm
351-003-01	50-75mm	9μm	C	optional
351-004-01	75-100mm	10μm	C	optional
351-005-01	100-125mm	11μm	C	optional
351-006-01	125-150mm	12μm	C	optional
351-007-01	150-175mm	13μm	C	optional
351-008-01	175-200mm	13μm	C	optional
351-009-01	200-225mm	14μm	C	optional
351-010-01	225-250mm	14μm	C	optional
351-011-01	250-275mm	15μm	C	optional
351-012-01	275-300mm	15μm	C	optional

Setting ring



Range<50mm **(included)**



Range>50mm **(optional)**

351 INSIDE MICROMETER

- Graduation: 0.01mm
- Carbide measuring faces
- Ratchet stop



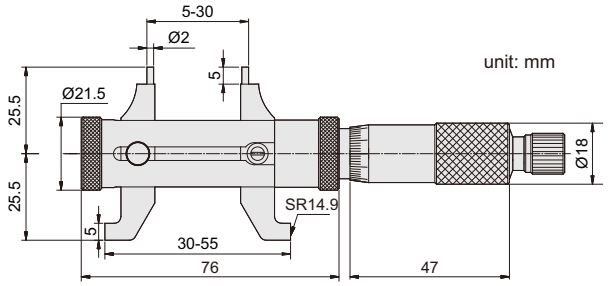

unit: mm

Setting ring**(included)**



Code	Range	Accuracy
351-001-21	5-55mm	4μm

SERIES 352 TUBULAR INSIDE MICROMETER

- Graduation: 0.01mm
- Travel of micrometer head: 13mm
- Accuracy: (3+n+L/50)μm, n is number of rods, L is max. measuring length in mm
- Supplied with setting standards
- Carbide measuring faces



352-006-01

unit: mm

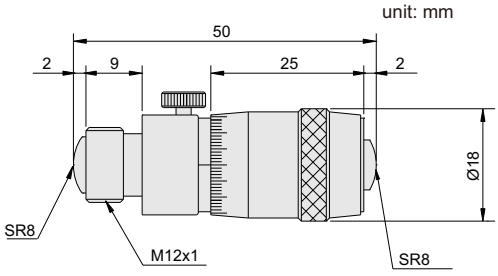

Code	Range	Extension rods (mm)
352-002-01	50-63mm	—
352-006-01	50-150mm	13, 25, 50
352-012-01	50-300mm	13, 25, 50(2pcs), 100
352-020-01	50-500mm	13, 25, 50(2pcs), 100, 200
352-024-01	50-600mm	13, 25, 50, 100, 150, 200
352-040-01	50-1000mm	13, 25, 50(2pcs), 100, 200(2pcs), 300
352-060-01	50-1500mm	13, 25, 50(2pcs), 100, 200(3pcs), 300(2pcs)

Set zero

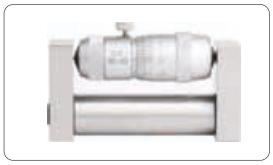

SERIES 352 TUBULAR INSIDE MICROMETER

- Graduation: .001"
- Accuracy: [.00005(3+n+L/2)]", n = number of rods, L = maximum measuring length (inch)
- Supplied with setting standards
- Carbide measuring faces



352-024-E01

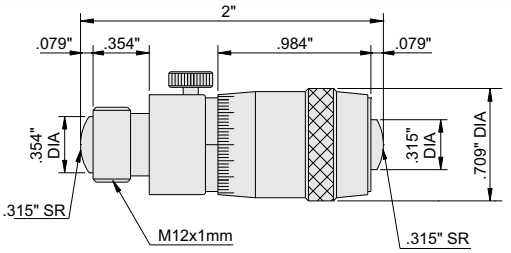

Code	Range	Travel of micrometer head	Extension rods
352-002-E01	2-2.5"	.5"	-
352-006-E01	2-6"	.5"	.5", 1", 2"
352-012-E01	2-12"	.5"	.5", 1", 2"(2pcs), 4"
352-020-E01	2-20"	.5"	.5", 1", 2"(2pcs), 4", 8"
352-024-E01	2-24"	.5"	.5", 1", 2", 4", 6", 8"
352-040-E01	2-40"	.5"	.5", 1", 2"(2pcs), 4", 8"(2pcs), 12"
352-060-E01	2-60"	.5"	.5", 1", 2"(2pcs), 4", 8"(3pcs), 12"(2pcs)

Set zero

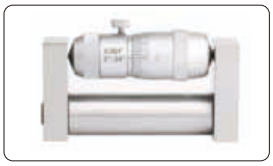

SERIES 359 DIGITAL TUBULAR INSIDE MICROMETER

Data output IP65

- Micrometer head: 150-175mm
- Graduation:0.001mm/0.00005"
- Accuracy:(3+n+L/50)μm
  n= number of rods
  L=maximum measuring length (mm)
- Carbide measuring faces
- The diameter of extension rods is 22mm
- IP65 dust/waterproof
- Button function: on/off, set, mm/inch, ABS/INC
- Data output
- Automatic power off
- Supplied with setting standards



359-007-01

unit: mm

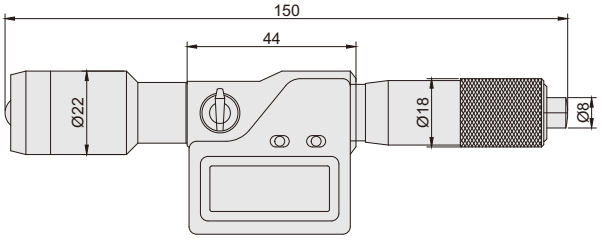

Code	Range	Travel of micrometer head	Extension rods
359-007-01	150-175mm	25mm	—
359-040-01	150-1000mm	25mm	25, 50(2pcs), 100, 200,400
359-060-01	150-1500mm	25mm	25, 50(2pcs), 100(2pcs), 200, 400(2pcs)
359-080-01	150-2000mm	25mm	25, 50(2pcs), 100, 200(2pcs), 400(3pcs)

Set zero



SERIES 353 TUBULAR INSIDE MICROMETER

- Graduation 0.01mm
- Accuracy: (3+n+L/50)μm
  n is number of rods, L is maximum measuring length in mm
- Travel of micrometer head: 25mm
- Supplied with setting standards
- Carbide measuring faces



353-020-01

Set zero



Code	Range	Extension rods (mm)
353-005-01	100-125mm	—
353-020-01	100-500mm	25, 50, 100, 200
353-036-01	100-900mm	25, 50, 100, 200, 400
353-052-01	100-1300mm	25, 50, 100, 200, 400(2pcs)
353-068-01	100-1700mm	25, 50, 100, 200, 400(3pcs)
353-084-01	100-2100mm	25, 50 100, 200, 400(4pcs)

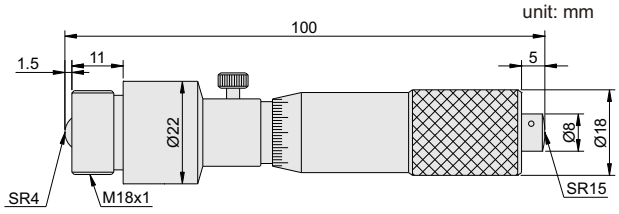

SERIES 354 TUBULAR INSIDE MICROMETER



354-005-01

- Graduation 0.01mm
- Carbide measuring faces

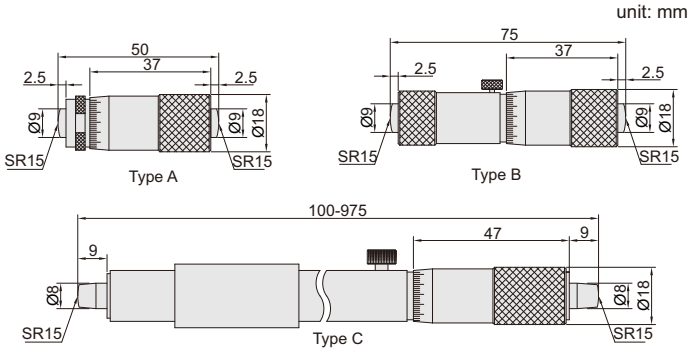

Code	Range	Type	Accuracy
354-003-01	50-75mm	A	5μm
354-004-01	75-100mm	B	5μm
354-005-01	100-125mm	C	6μm
354-006-01	125-150mm	C	6μm
354-007-01	150-175mm	C	7μm
354-008-01	175-200mm	C	7μm
354-009-01	200-225mm	C	8μm
354-010-01	225-250mm	C	8μm
354-011-01	250-275mm	C	9μm
354-012-01	275-300mm	C	9μm
354-013-01	300-325mm	C	9μm
354-014-01	325-350mm	C	9μm
354-015-01	350-375mm	C	10μm
354-016-01	375-400mm	C	10μm
354-017-01	400-425mm	C	10μm
354-018-01	425-450mm	C	10μm
354-019-01	450-475mm	C	11μm
354-020-01	475-500mm	C	11μm
354-021-01	500-252mm	C	11μm

Code	Range	Type	Accuracy
354-022-01	525-550mm	C	11μm
354-023-01	550-575mm	C	11μm
354-024-01	575-600mm	C	12μm
354-025-01	600-625mm	C	12μm
354-026-01	625-650mm	C	12μm
354-027-01	650-675mm	C	13μm
354-028-01	675-700mm	C	13μm
354-029-01	700-725mm	C	13μm
354-030-01	725-750mm	C	14μm
354-031-01	750-775mm	C	14μm
354-032-01	775-800mm	C	14μm
354-033-01	800-825mm	C	15μm
354-034-01	825-850mm	C	15μm
354-035-01	850-875mm	C	15μm
354-036-01	875-900mm	C	16μm
354-037-01	900-925mm	C	16μm
354-038-01	925-950mm	C	16μm
354-039-01	950-975mm	C	17μm
354-040-01	975-1000mm	C	17μm

SERIES 355 TUBULAR INSIDE MICROMETER

- Graduation 0.01mm
- Accuracy: (6+L/50)μm
  L=maximum measuring length(mm)
- Optional accessory: setting ring(code **531**)

Setting ring**(optional)**





355-008-01

unit: mm

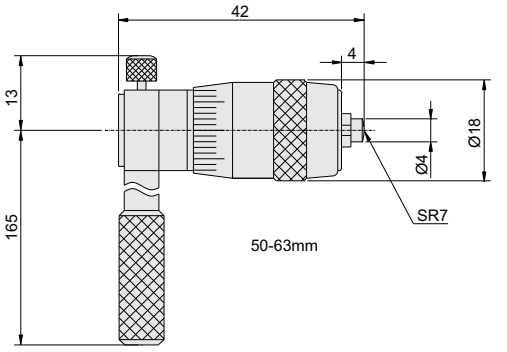

Code	Range	Extension rods	Travel of micrometer head
355-001-01	25-32mm	—	7mm
355-002-01	25-50mm	2pcs	7mm
355-003-01	50-63mm	—	13mm
355-008-01	50-200mm	6pcs	13mm
355-009-01	200-225mm	—	25mm
355-012-01	50-300mm	10pcs	13mm
355-020-01	200-500mm	3pcs	25mm
355-040-01	200-1000mm	8pcs	25mm

SERIES 357 TUBULAR INSIDE MICROMETER

- Graduation 0.01mm
- Accuracy: (7+n+L/50)μm
  n=number of rods
  L=maximum measuring length(mm)
- Carbide measuring faces



357-080-01

unit: mm

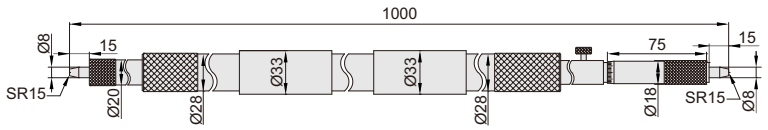

Code	Range	Travel of micrometer head	Extension rods
357-080-01	1000-2000mm	50mm	50mm, 100mm(2pcs), 200mm, 500mm
357-120-01	1000-3000mm	50mm	50mm, 100mm(2pcs), 200mm, 500mm, 1000mm
357-160-01	1000-4000mm	50mm	50mm, 100mm(2pcs), 200mm, 500mm, 1000mm(2pcs)
357-200-01	1000-5000mm	50mm	50mm, 100mm(2pcs), 200mm, 500mm, 1000mm(3pcs)

SERIES 358 INTERNAL SCREW THREAD MICROMETER

- Graduation: 0.01mm



measuring tips for screw thread **(optional)**

358-004-01

measuring tips for screw thread **(optional)**

Setting standards (included)

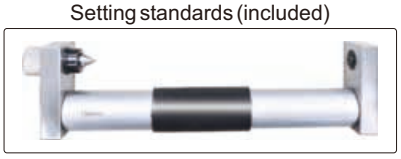

Measuring tips for internal screw thread micrometer **(optional)**



Code	Range	Micrometer head accuracy	Accuracy of micrometers with tips
358-004-01	75-100mm	0.004	0.03
358-005-01	100-125mm	0.005	
358-006-01	125-150mm	0.005	
358-007-01	150-175mm	0.006	
358-008-01	175-200mm	0.006	0. 04
358-009-01	200-225mm	0.007	
358-010-01	225-250mm	0.007	
358-011-01	250-275mm	0.008	
358-012-01	275-300mm	0.008	0. 05

SERIES 358 MEASURING TIPS FOR INTERNAL SCREW THREAD MICROMETER

- Supplied in pair
- For **358** series micrometers



358-000-19

unit: mm

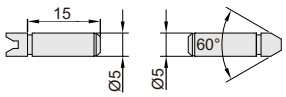

60° thread angle

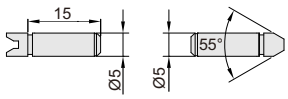

55° thread angle

Metric and unified thread (60° thread angle)

Code	Pitch
358-000-01	0.4-0.5mm/ 64-48TPI
358-000-02	0.6-0.9mm/ 44-28TPI
358-000-03	1-1.75mm/ 24-14TPI
358-000-04	2-3mm/ 13-9TPI
358-000-05	3.5-5mm/ 8-5TPI
358-000-06	5.5-7mm/ 4.5-3.5TPI
358-000-TS	6 pairs/set, including all above tips

Whitworth thread (55° thread angle)

Code	Pitch
358-000-11	60-48TPI
358-000-12	48-40TPI
358-000-13	40-32TPI
358-000-14	32-24TPI
358-000-15	24-18TPI
358-000-16	18-14TPI
358-000-17	14-10TPI

Code	Pitch
358-000-18	10-7TPI
358-000-19	7-4.5TPI
358-000-20	4.5-3.5TPI
358-000-2TS	10 pairs/set, including all above tips

SERIES 251 DIAL BORE GAUGE SET

- Optional accessory: series 531 setting rings



Bore gauge setter for setting zero**(optional)**



Setting ring**(optional)**



Measuring tips**(included)**



Gasket**(included)**



215-010-12 (optional)







251-046-11







251-346-13

Code	Range	indicator	Accuracy	Repeatability	Bore gages included
251-046-11	35-160mm	range 10mm graduation 0.01mm	35-50mm ±0.018mm 50-160mm ±0.018mm	0.003mm	35-50mm anvil (dial indicator and handle are not included) 50-160mm bore gage
251-346-13	18-160mm	range 10mm graduation 0.01mm	18-35mm ±0.015mm 35-60mm ±0.018mm 50-160mm ±0.018mm	0.003mm	18-35mm bore gage 35-60mm (dial indicator is not included) 50-160mm (dial indicator is not included)

SERIES 251 DIAL BORE GAUGE

- Optional accessory: series 531 setting rings





251-160-11

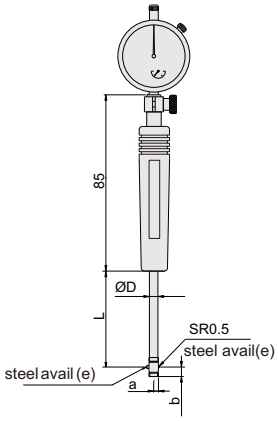

Range: 6-10mm

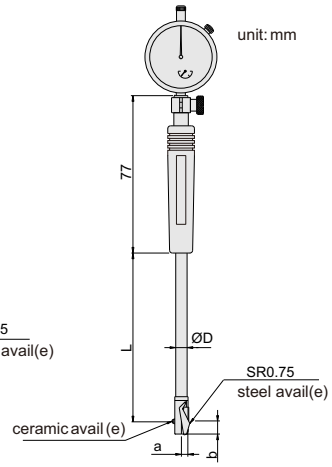

Range: 10-18mm

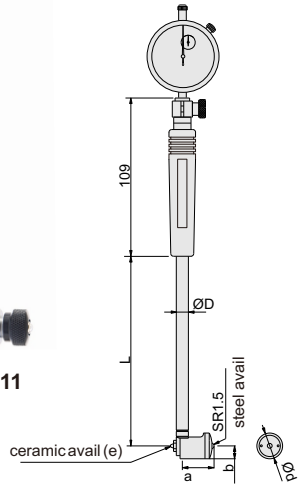

Range: 18-35mm

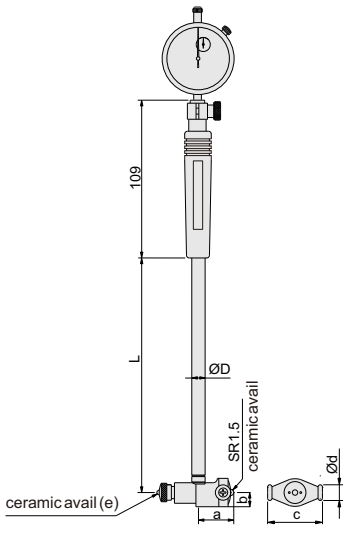

Range: 35-450mm

Bore gauge setter for setting zero**(optional)**



Setting ring**(optional)**



Measuring tips**(included)**



Gasket**(included)**



215-010-12 (optional)



Install tips

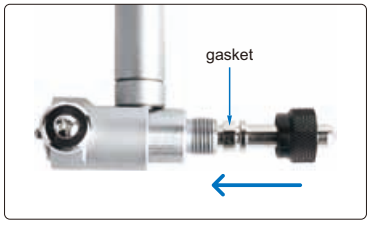

Code	Range	Dial indicator	Tips	Gasket	Accuracy	Repeatability	a	b	c	Ød	ØD	e	L
251-010-11	6-10mm	Range: 3mm graduation: 0.01mm	9pcs	2pcs	±0.012mm	3μm	3.6	5.7	/	/	4.5	R1	48
251-018-11	10-18mm		9pcs	2pcs	±0.012mm	3μm	5.6	7.8	/	/	6	SR1	105
251-035-11	18-35mm	Range: 10mm graduation: 0.01mm	9pcs	2pcs	±0.015mm	3μm	12.2	6.4	/	12.7	9	SR1	141
251-060-11	35-60mm		6pcs	4pcs	±0.018mm	3μm	26	9	27	13	12.8	SR2	141
251-100-11	50-100mm		11pcs	4pcs	±0.018mm	3μm	26	9	35	13	12.8	SR2	141
251-160-11	50-160mm		12pcs	4pcs	±0.018mm	3μm	26	9	35	13	12.8	SR2	141
251-160-12	100-160mm		12pcs	4pcs	±0.018mm	3μm	26	9	35	13	12.8	SR2	141
251-250-11	160-250mm		5pcs	5pcs	±0.018mm	3μm	56.5	13	74.5	15	14.5	SR2	400
251-450-11	250-450mm		5pcs	5pcs	±0.018mm	3μm	86.5	15	101.5	15	14.5	SR2	400

SERIES 251 PRECISION DIAL BORE GAUGE

- Optional accessory: series 531 setting rings and long handle series 250.





251-160-01

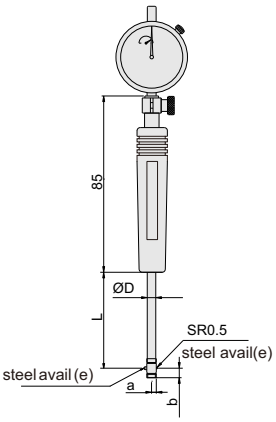

Range: 6-10mm

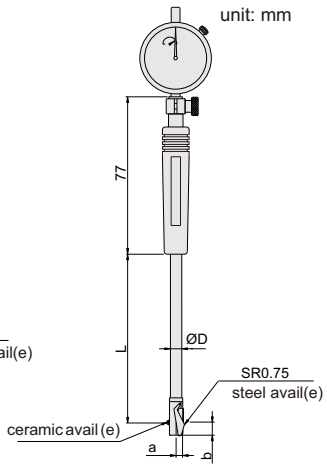

Range: 10-18mm

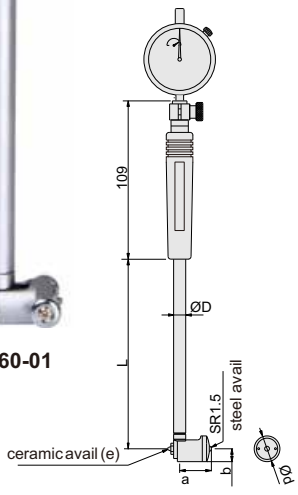

Range: 18-35mm

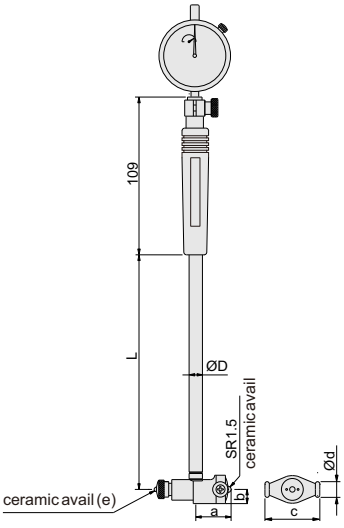

Range: 35-450mm

Bore gauge setter for setting zero**(optional)**



Setting ring**(optional)**



Measuring tips**(included)**



Gasket**(included)**



215-010-02 (optional)



Install tips

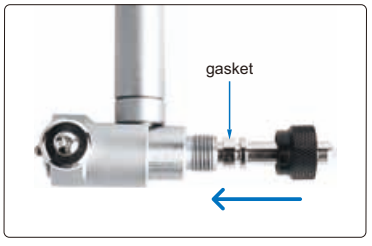

Code	Range	Dial indicator	Tips	Gasket	Accuracy	Repeatability	a	b	c	Ød	ØD	e	L
251-010-01	6-10mm	Range: 1mm graduation: 0.001mm	9pcs	2pcs	±0.005mm	2μm	3.6	5.7	/	/	4.5	R1	48
251-018-01	10-18mm		9pcs	2pcs	±0.005mm	2μm	5.6	7.8	/	/	6	SR1	105
251-035-01	18-35mm		9pcs	2pcs	±0.006mm	2μm	12.2	6.4	/	12.7	9	SR1	141
251-060-01	35-60mm		6pcs	4pcs	±0.007mm	2μm	26	9	27	13	12.8	SR2	141
251-100-01	50-100mm		11pcs	4pcs	±0.007mm	2μm	26	9	35	13	12.8	SR2	141
251-160-01	50-160mm		12pcs	4pcs	±0.007mm	2μm	26	9	35	13	12.8	SR2	141
251-160-02	100-160mm		12pcs	4pcs	±0.007mm	2μm	26	9	35	13	12.8	SR2	141
251-250-01	160-250mm		5pcs	5pcs	±0.007mm	2μm	56.5	13	74.5	15	14.5	SR2	400
251-450-01	250-450mm		5pcs	5pcs	±0.007mm	2μm	86.5	15	101.5	15	14.5	SR2	400

SERIES 241 DIGITAL PRECISION BORE GAUGE

Data output | CR2032

- With min. value tracking function, get the diameter automatically
- Optional accessory: series 531 setting rings



241-035-01

unit: mm

VIDEO

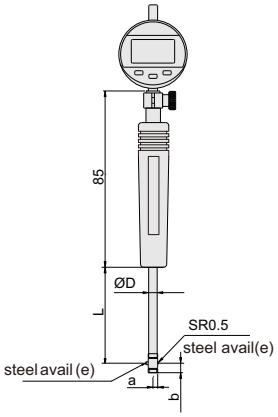

Range: 6-10mm

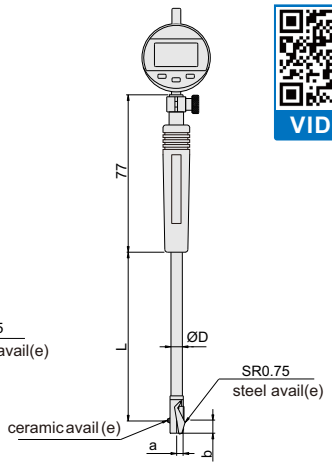

Range: 10-18mm

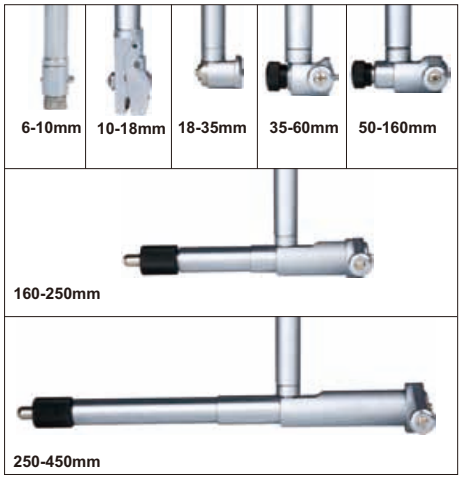

Bore gauge setter for setting zero**(optional)**



Setting ring**(optional)**



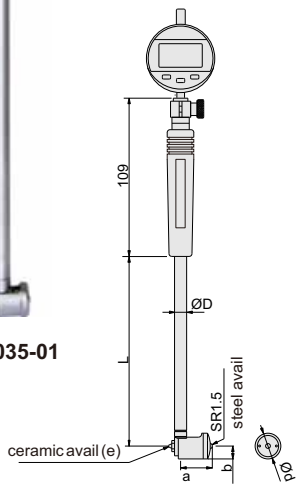

Range: 18-35mm

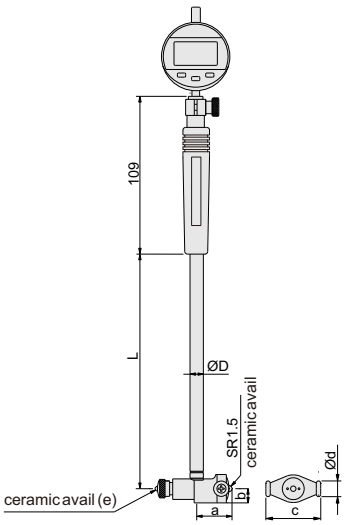

Range: 35-450mm

Measuring tips**(included)**



Gasket**(included)**



Install tips

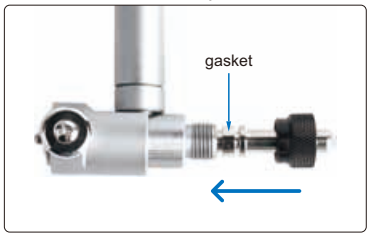

Code	Range	Digital indicator	Tips	Gasket	Accuracy	Repeatability	a	b	c	Ød	ØD	e	L
241-010-01	6-10mm	Range: 12.7mm resolution: 0.001mm	9pcs	2pcs	±0.005mm	2μm	3.6	5.7	/	/	4.5	R1	48
241-018-01	10-18mm		9pcs	2pcs	±0.005mm	2μm	5.6	7.8	/	/	6	SR1	105
241-035-01	18-35mm		9pcs	2pcs	±0.006mm	2μm	12.2	6.4	/	12.7	9	SR1	141
241-060-01	35-60mm		6pcs	4pcs	±0.007mm	2μm	26	9	27	13	12.8	SR2	141
241-100-01	50-100mm		11pcs	4pcs	±0.007mm	2μm	26	9	35	13	12.8	SR2	141
241-160-01	50-160mm		12pcs	4pcs	±0.007mm	2μm	26	9	35	13	12.8	SR2	141
241-160-02	100-160mm		12pcs	4pcs	±0.007mm	2μm	26	9	35	13	12.8	SR2	141
241-250-01	160-250mm		5pcs	5pcs	±0.007mm	2μm	56.5	13	74.5	15	14.5	SR2	400
241-450-01	250-450mm		5pcs	5pcs	±0.007mm	2μm	86.5	15	101.5	15	14.5	SR2	400

SERIES 241 DIGITAL BORE GAUGE

Data output | CR2032

- With min. value tracking function, get the diameter automatically
- Optional accessory: series 531 setting rings

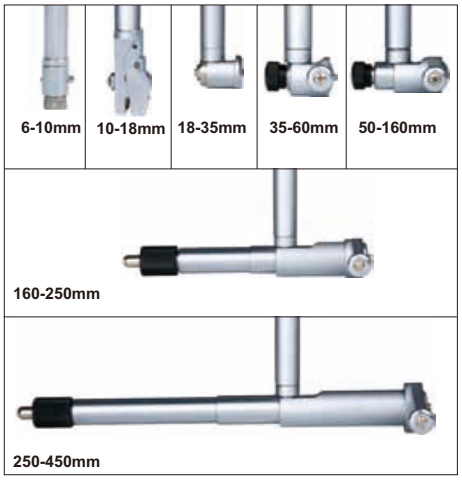



241-160-11

unit: mm

VIDEO

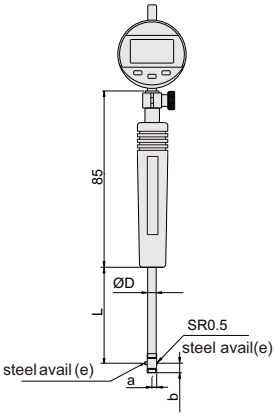

Range: 6-10mm

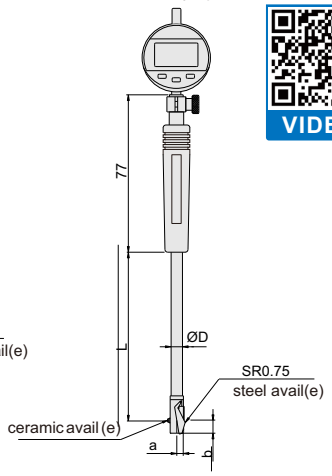

Range: 10-18mm

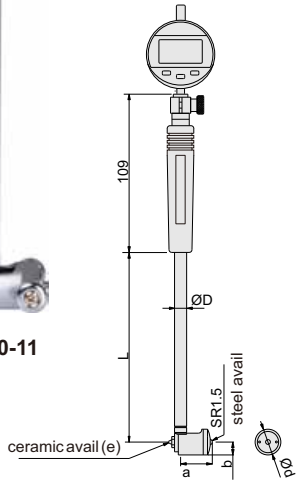

Range: 18-35mm

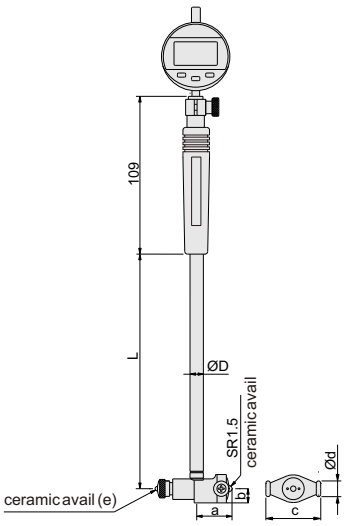

Range: 35-450mm

Bore gauge setter for setting zero**(optional)**



Setting ring**(optional)**



Measuring tips**(included)**



Gasket**(included)**



Install tips

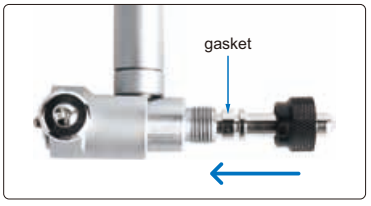

Code	Range	Digital indicator	Tips	Gasket	Accuracy	Repeatability	a	b	c	Ød	ØD	e	L
241-010-11	6-10mm	Range: 12.7mm resolution: 0.002mm	9pcs	2pcs	±0.012mm	3μm	3.6	5.7	/	/	4.5	R1	48
241-018-11	10-18mm		9pcs	2pcs	±0.012mm	3μm	5.6	7.8	/	/	6	SR1	105
241-035-11	18-35mm		9pcs	2pcs	±0.015mm	3μm	12.2	6.4	/	12.7	9	SR1	141
241-060-11	35-60mm		6pcs	4pcs	±0.018mm	3μm	12.2	9	27	13	12.8	SR2	141
241-100-11	50-100mm		11pcs	4pcs	±0.018mm	3μm	26	9	35	13	12.8	SR2	141
241-160-11	50-160mm		12pcs	4pcs	±0.018mm	3μm	26	9	35	13	12.8	SR2	141
241-160-12	100-160mm		12pcs	4pcs	±0.018mm	3μm	26	9	35	13	12.8	SR2	141
241-250-11	160-250mm		5pcs	5pcs	±0.018mm	3μm	56.5	13	74.5	15	14.5	SR2	400
241-450-11	250-450mm		5pcs	5pcs	±0.018mm	3μm	86.5	15	101.5	15	14.5	SR2	400

SERIES 245 LARGE DIAMETER DIAL BORE GAUGE

- Carbide tipped contact point, wheel guide
- Optional accessory: series 531 setting rings



245-050-11

unit: mm

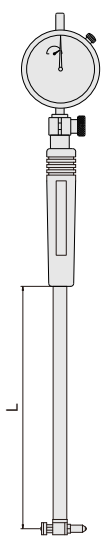

Range: 18-50mm

Tips style



245-050-11

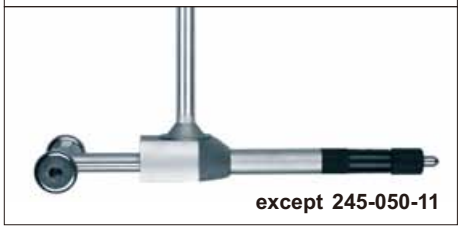

except 245-050-11

Bore gauge setter for setting zero**(optional)**



Setting ring**(optional)**



215-010-12(optional)



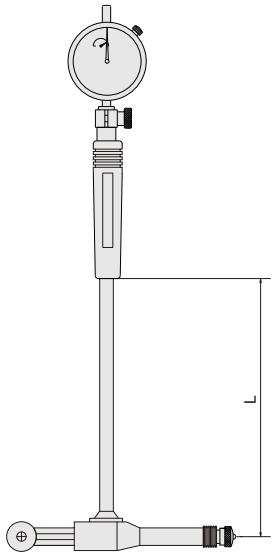

Range: 30-1000mm

Measuring tips**(included)**

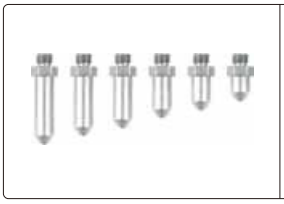

Measuring tips**(included)**



Gasket**(included)**



Install tips**(245-050-11)**

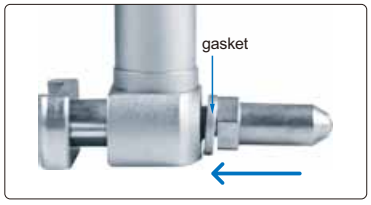

Install tips**(except 245-050-11)**

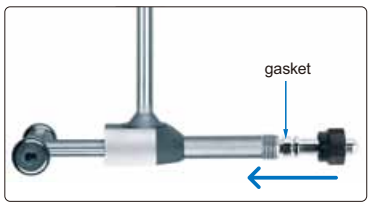

Code	Range	Dial indicator	Tips	Gasket	Probe Travel	Extensionrod	L
245-050-11	18-50mm	Range: 10mm graduation: 0.01mm	9pcs	2pcs	1.5mm	1	150
245-100-11	30-100mm		5pcs	3pcs	1.8mm	2	150
245-100-12	50-100mm		11pcs	2pcs	4mm	-	200
245-160-11	100-160mm		7pcs	4pcs	4mm	-	300
245-250-11	160-250mm		5pcs	4pcs	4mm	2	400
245-300-11	100-300mm		6pcs	4pcs	3mm	2	250
245-450-11	250-450mm		5pcs	4pcs	6mm	2	500
245-700-11	450-700mm		5pcs	4pcs	8mm	4	500
245-1000-11	700-1000mm		5pcs	4pcs	8mm	5	500

243/253 BORE GAUGE

Digital indicator for
243-800-11



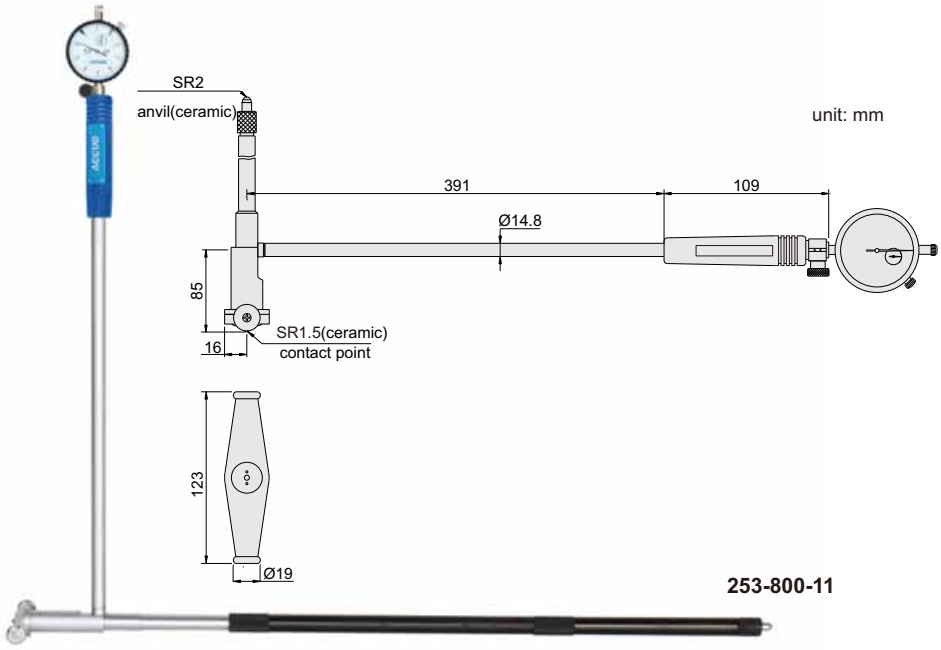

Code	Range	Accuracy	Repeatability	Indicator
253-800-11	400-800mm	±0.025mm	0.003mm	dial indicator (Code: 222-010-12) range 10mm, graduation 0.01mm
243-800-11	400-800mm	±0.025mm	0.003mm	digital indicator (Code: 215-010-12) range 12.7mm, resolution 0.002mm/0.0001"

SERIES 244/254 BORE GAUGE

- Accuracy: 0.018mm
- Repeatability: 0.003mm

Digital indicator for
series **244**





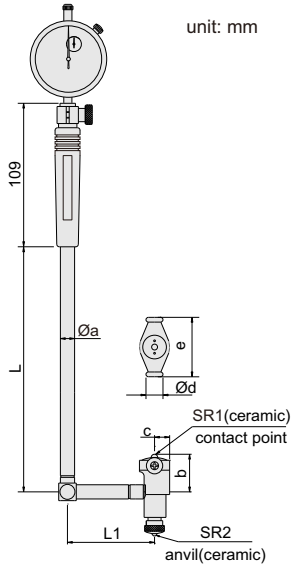

Dial type

Code	Range	Indicator
254-060-11	35-60mm	dial indicator: (Code: 222-010-12) range 10mm, graduation 0.01mm
254-160-11	50-160mm	
254-250-11	160-250mm	
254-450-11	250-450mm	

Digital type

Code	Range	Indicator
244-060-11	35-60mm	digital indicator (Code: 215-010-12) range: 12.7mm/0.5", graduation: 0.002mm/0.0001"
244-160-11	50-160mm	
244-250-11	160-250mm	
244-450-11	250-450mm	

Range	Øa	b	c	Ød	e	L	L1
35-60mm	12.8	22	9	13	27	141	75
50-160mm	12.8	28.5	9.2	13	35	141	76.2
160-250mm	14.5	62.0	12.7	15	74.5	391	100
250-450mm	14.5	91.5	15.0	15	101.5	391	100

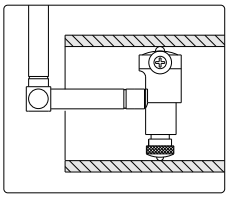

SERIES 249 BORE GAGE FOR BLIND HOLES

- To measure diameter of shallow and blind holes
- Optional accessory:
  0.01mm or 0.001mm graduation dial indicators (222-010-12 or 222-001-02);
  digital indicator (215-010-11 or 215-010-12);
  setting ring (series 531);
  bore gauge setter(255-016-11)



249-110-51

Bore gauge setter for setting zero**(optional)**



Setting ring**(optional)**



Measuring tips**(included)**



Digital indicator **(optional)**



215-010-11 or 215-010-12

unit: mm

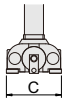

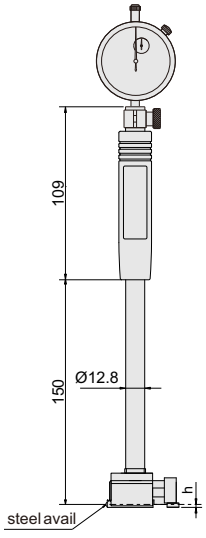

Range: 50-110mm

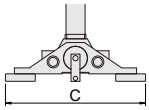

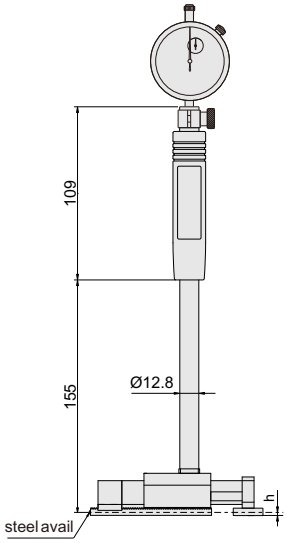

Range: 110-300mm

Code	Range	Accuracy (without dial indicator)	Repeatability (without dial indicator)	C	h
249-110-51	50-110mm	4µm	1µm	37	2
249-300-51	110-300mm	4µm	1µm	94	2

SERIES 240 SPLIT TYPE DIAL BORE GAUGE SET FOR BLIND HOLES

- Split type contact points
- Accuracy (without indicator): 3μm (measuring range 1 .5~10mm), 4μm (measuring range 10~20.6mm)
- Repeatability (without indicator): 1μm
- Dial indicators are optional



240-120-11M

Code	Range	Quantity of points	Measuring range of point	Measuring depth (L1)	Total length(L)	Material of points	Setting ring (optional)
240-040-11M	1.5-4.2	10	1.5-1.9	17	93	carbide	Ø1.75
			1.8-2.2	17	93	carbide	Ø2
			2.05-2.45	17	93	carbide	Ø2.25
			2.3-2.7	25	101	carbide	Ø2.5
			2.55-2.95	25	101	carbide	Ø2.75
			2.8-3.2	25	101	carbide	Ø3
			3.05-3.45	25	101	carbide	Ø3.25
			3.3-3.7	25	101	carbide	Ø3.5
			3.55-3.9	25	101	carbide	Ø3.75
			5 3.8-4.2	25	101	carbide	Ø4
240-075-11M	4.15-7.8	7	4.15-4.8	41	118	hard chromed	Ø4.5
			4.7-5.3	41	118	hard chromed	Ø5
			5.2-5.8	41	118	hard chromed	Ø5.5
			5.7-6.3	41	118	hard chromed	Ø6
			6.2-6.8	41	118	hard chromed	Ø6.5
			6.7-7.3	41	118	hard chromed	Ø7
			7.2-7.8	45	118	hard chromed	Ø7.5
240-120-11M	7.7-12.5	6	7.7-8.3	45	118	hard chromed	Ø8
			8.2-8.8	45	118	hard chromed	Ø8.5
			8.7-9.3	45	118	hard chromed	Ø9
			9.2-10.5	45	118	hard chromed	Ø10
			10.2-11.5	45	118	hard chromed	Ø11
			11.2-12.5	45	118	hard chromed	Ø12
240-200-11M	12.2-20.6	8	12.2-13.5	45	118	hard chromed	Ø13
			13.4-14.6	45	118	hard chromed	Ø14
			14.4-15.6	45	118	hard chromed	Ø15
			15.4-16.6	45	118	hard chromed	Ø16
			16.4-17.6	45	118	hard chromed	Ø17
			17.4-18.6	45	118	hard chromed	Ø18
			18.4-19.6	45	118	hard chromed	Ø19
			19.4-20.6	45	118	hard chromed	Ø20

unit: mm

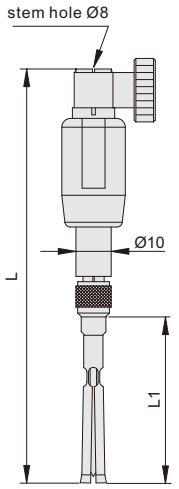

Setting ring **(optional)**



Series 531

Optional indicators **(optional)**



215-010-02



222-001-02

SERIES 240 SPLIT TYPE DIAL BORE GAUGE SET

unit: mm

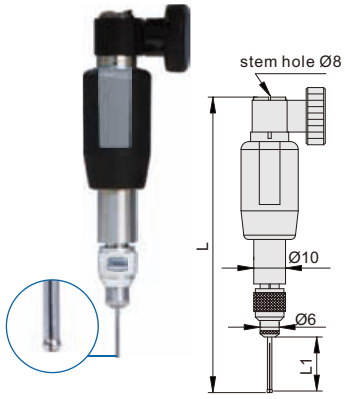

type A

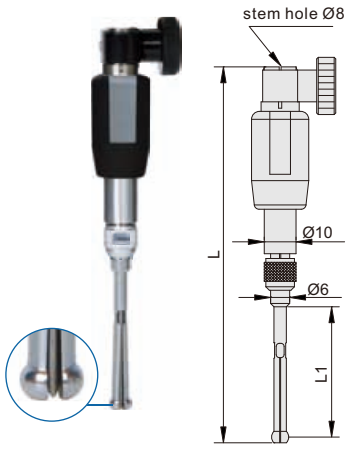

type B

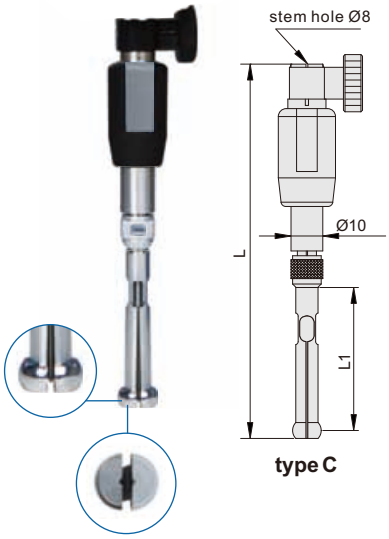

type C

- Split type contact points
- Accuracy (without indicator):
  3μm (measuring range 0.95~ 10mm),
  4μm (measuring range 10~ 20.6mm)
- Repeatability (without indicator): 1μm
- Dial indicators are optional

Setting ring **(optional)**



Series 531

Optional indicators **(optional)**



215-010-02


222-001-02

Code	Range	Quantity of points	Measuring range of point	Measuring depth (L1)	Total length (L)	Material of points	Type of point	Setting ring (optional)
240-014-11	0.95-1.55	5	0.95-1.15	13	89	carbide	A	Ø1
			1.07-1.25	13	89	carbide	A	Ø1.1
			1.17-1.35	13	89	carbide	A	Ø1.2
			1.27-1.45	13	89	carbide	A	Ø1.3
			1.37-1.55	13	89	carbide	A	Ø1.4
240-040-11	1.5-4.2	10	1.5-1.9	17	93	carbide	A	Ø1.75
			1.8-2.2	17	93	carbide	A	Ø2
			2.05-2.45	17	93	carbide	A	Ø2.25
			2.3-2.7	25	101	carbide	A	Ø2.5
			2.55-2.95	25	101	carbide	A	Ø2.75
			2.8-3.2	25	101	carbide	A	Ø3
			3.05-3.45	25	101	carbide	A	Ø3.25
			3.3-3.7	25	101	carbide	A	Ø3.5
			3.55-3.95	25	101	carbide	A	Ø3.75
			3.8-4.2	25	101	carbide	A	Ø4
			0.95-1.15	13	89	carbide	A	1
			1.07-1.25	13	89	carbide	A	Ø1.1
			1.17-1.35	13	89	carbide	A	Ø1.2



SERIES 240 SPLIT TYPE DIAL BORE GAUGE SET

Code	Range	Quantity of points	Measuring range of point	Measuring depth (L1)	Total length (L)	Material of points	Type of point	Setting ring (optional)
240-040-12	0.95-4.2	15	1.27-1.45	13	89	carbide	A	Ø1.3
			1.37-1.55	13	89	carbide	A	Ø1.4
			1.5-1.9	17	93	carbide	A	Ø1.75
			1.8-2.2	17	93	carbide	A	Ø2
			2.05-2.45	17	93	carbide	A	Ø2.25
			2.3-2.7	25	101	carbide	A	Ø2.5
			2.55-2.95	25	101	carbide	A	Ø2.75
			2.8-3.2	25	101	carbide	A	Ø3
			3.05-3.45	25	101	carbide	A	Ø3.25
			3.3-3.7	25	101	carbide	A	Ø3.5
			3.55-3.95	25	101	carbide	A	Ø3.75
			3.8-4.2	25	101	carbide	A	Ø4
240-075-11	4.15-7.8	7	4.15-4.8	41	118	hard chromed	B	Ø4.5
			4.7-5.3	41	118	hard chromed	B	Ø5
			5.2-5.8	41	118	hard chromed	B	Ø5.5
			5.7-6.3	41	118	hard chromed	B	Ø6
			6.2-6.8	41	118	hard chromed	B	Ø6.5
			6.7-7.3	41	118	hard chromed	B	Ø7
			7.2-7.8	45	118	hard chromed	C	Ø7.5
240-120-11	7.7-12.5	6	7.7-8.3	45	118	hard chromed	C	Ø8
			8.2-8.8	45	118	hard chromed	C	Ø8.5
			8.7-9.3	45	118	hard chromed	C	Ø9
			9.2-10.5	45	118	hard chromed	C	Ø10
			10.2-11.5	45	118	hard chromed	C	Ø11
			11.2-12.5	45	118	hard chromed	C	Ø12
240-120-12	4.15-12.5	13	4.15-4.8	41	118	hard chromed	B	Ø4.5
			4.7-5.3	41	118	hard chromed	B	Ø5
			5.2-5.8	41	118	hard chromed	B	Ø5.5
			5.7-6.3	41	118	hard chromed	B	Ø6
			6.2-6.8	41	118	hard chromed	B	Ø6.5
			6.7-7.3	41	118	hard chromed	B	Ø7
			7.2-7.8	45	118	hard chromed	C	Ø7.5
			7.7-8.3	45	118	hard chromed	C	Ø8
			8.2-8.8	45	118	hard chromed	C	Ø8.5
			8.7-9.3	45	118	hard chromed	C	Ø9
			9.2-10.5	45	118	hard chromed	C	Ø10
			10.2-11.5	45	118	hard chromed	C	Ø11
			11.2-12.5	45	118	hard chromed	C	Ø12
240-200-11	12.2-20.6	8	12.2-13.5	45	118	hard chromed	C	Ø13
			13.4-14.6	45	118	hard chromed	C	Ø14
			14.4-15.6	45	118	hard chromed	C	Ø15
			15.4-16.6	45	118	hard chromed	C	Ø16
			16.4-17.6	45	118	hard chromed	C	Ø17
			17.4-18.6	45	118	hard chromed	C	Ø18
			18.4-19.6	45	118	hard chromed	C	Ø19
			19.4-20.6	45	118	hard chromed	C	Ø20

SERIES 252 INCH DIAL BORE GAUGE

- Optional accessory: Long handle series 250

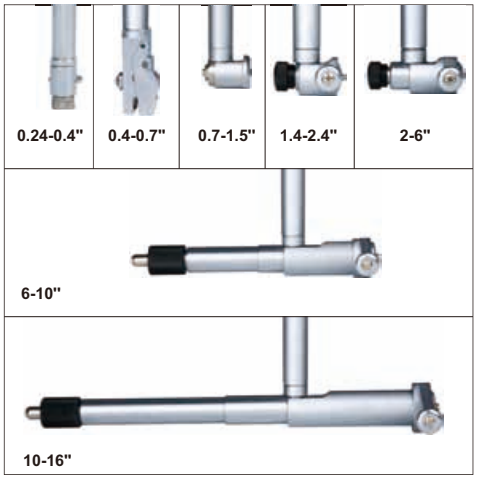



252-015-11

unit: mm

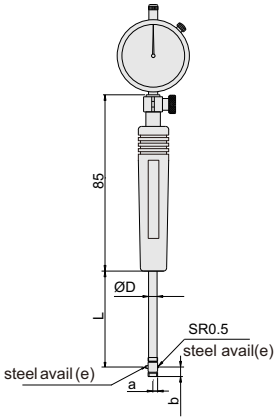

Range: 0.24-0.4"

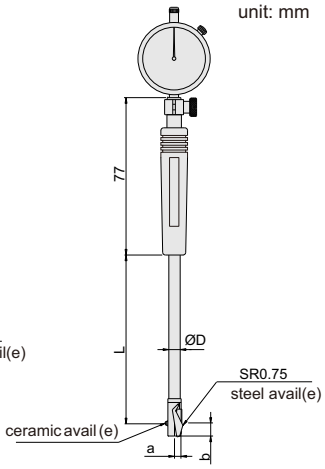

Range: 0.4-0.7"

Bore gauge setter for setting zero**(optional)**



Setting ring**(optional)**



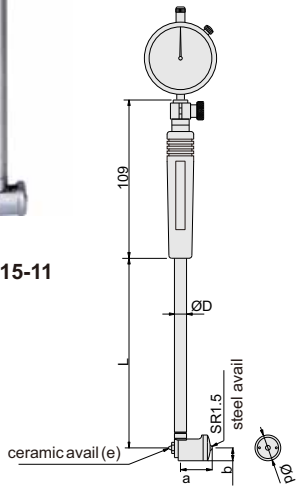

Range: 0.7-1.5"

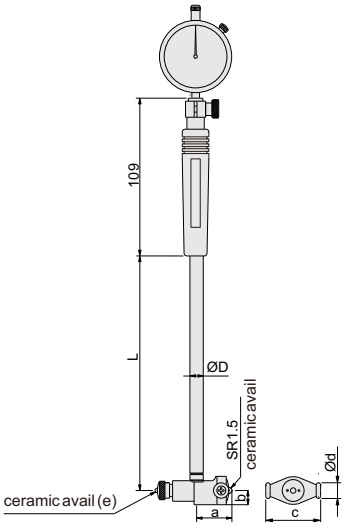

Range: 1.4-16"

Measuring tips**(included)**



Gasket**(included)**



Code	Range	Dial indicator	Accuracy	Repeatability	a	b	c	Ød	ØD	e	L
252-004-11	0.24-0.4"	dial indicator, range 0.25", graduation 0.0005"	±0.00075"	0.00015"	3.6	5.7	/	/	4.5	SR1	48
252-007-11	0.4-0.7"		±0.00075"	0.00015"	5.6	7.8	/	/	6	SR1	105
252-015-11	0.7-1.5"		±0.00075"	0.00015"	12.2	6.4	/	12.7	9	SR1	141
252-024-11	1.4-2.4"		±0.0009"	0.00015"	26	9	27	13	12.8	SR2	141
252-060-11	2-6"		±0.0009"	0.00015"	26	9	35	13	12.8	SR2	141
252-100-11	6-10"		±0.0009"	0.00015"	56.5	13	74.5	15	14.5	SR3.5	400
252-160-11	10-16"		±0.0009"	0.00015"	86.5	15	101.5	15	14.5	SR3.5	400

SERIES 250 ANVIL FOR BORE GAUGES

- Measuring face is made of ceramic



250-060-11

Code	For bore gauges	QTY. per set	Measuring tip material	Measuring range of anvil (mm)
250-010-11	6-10mm	9pcs	steel	6, 6.5, 7, 7.5, 8, 8.5, 9, 9.5, 10
250-018-11	10-18.5mm	9pcs	ceramic	10, 11, 12, 13, 14, 15, 16, 17, 18
250-035-11	18-35mm	9pcs	ceramic	18, 20, 22, 24, 26, 28, 30, 32, 34
250-060-11	35-60mm	6pcs	ceramic	35, 40, 45, 50, 55, 60
250-100-11	50-100mm	11pcs	ceramic	50, 55, 60, 65, 70, 75, 80, 85, 90, 95, 100
250-160-11	50-160mm	12pcs	ceramic	50, 55, 60, 65, 70, 75, 80, 85, 90, 95, 100, 105
250-160-12	100-160mm	12pcs	ceramic	50, 55, 60, 65, 70, 75, 80, 85, 90, 95, 100, 105
250-250-11	160-250mm	5pcs	ceramic	160, 170, 180, 190, 200
250-450-11	250-450mm	5pcs	ceramic	250, 260, 270, 280, 290

SERIES 250 LONG HANDLE

- To assist deep-hole measurement

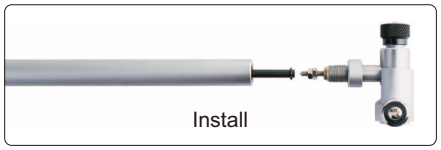
Install



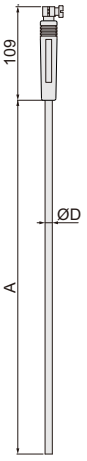

type A

unit: mm

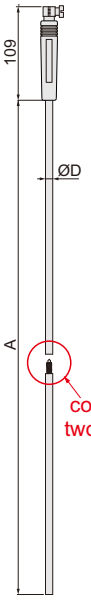

type B

Code	For bore gauges	A	ØD	Type
250-000-10	18-35mm	473	9	A
250-000-01	35-60mm, 50-100mm, 50-160mm, 100-160mm	473	13	A
250-000-02		980	13	A
250-000-22		1980	14.5	B
250-000-03	160-250mm, 250-450mm	480	14.5	A
250-000-04		980	14.5	A
250-000-24		1980	14.5	B

255 BORE GAUGE CHECKER

- Used together with gauge blocks to set bore gauges

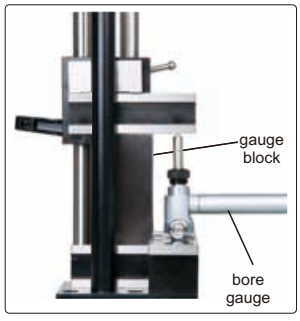



unit: mm

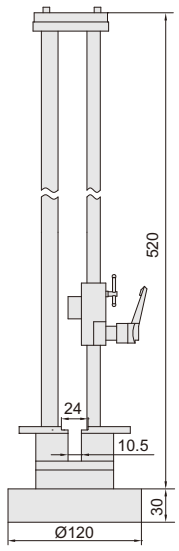

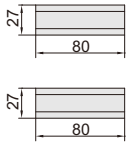

Code	Range
255-016-11	18-400mm

SERIES 256 BORE GAUGE SETTER

Certificate

- Can be used in vertical and horizontal
- To be used with gauge blocks



unit: mm

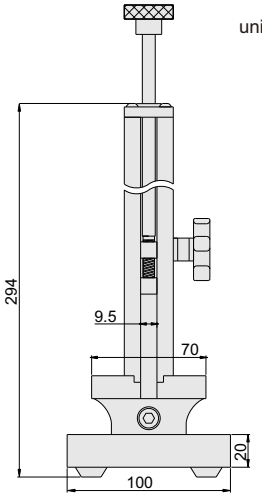

Gauge block set (grade 2,ISO3650) for 256-160-11

Blocks per set	Size(mm)	Step(mm)	Quantity(pcs)
33	1.005	–	1
	1.01-1.09	0.01	9
	1.1-1.9	0.1	9
	1-9	1	9
	10-30	10	3
	50	–	1
	100	–	1

Code	Range	Repeatability	Gauge block set
256-160-11*	0-160mm	1.2μm	with
256-160-10	0-160mm	1.2μm	without

* **With manufacturer inspection certificate for gauge block set**

Application



Gauge block set for 256-160-11



SERIES 401 UNIVERSAL GAUGE

- For external, internal dimensions and center line space
- Tips movable range:8mm
- Tips effective measuring range:±2mm

Indicator is not included (211-010-03)



401-012-01

unit: mm



Included(mounting attachments/1 pairs)

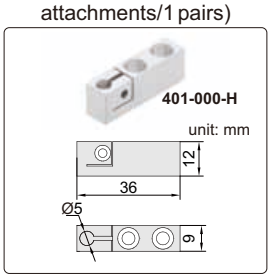

Included(disk head with round measuring blades/1 pairs)

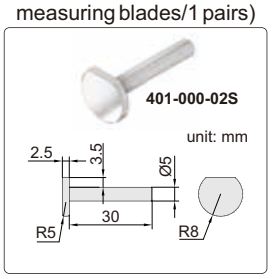

Included(stops/1 pairs)

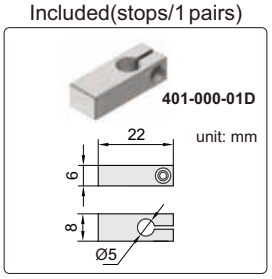

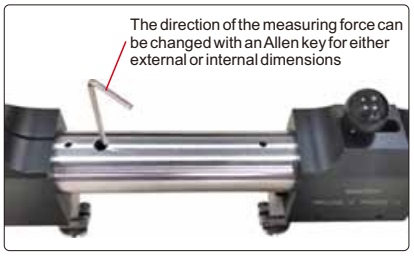

Code	Range		Accuracy	Repeatability
	outside	inside		
401-012-01	0-270mm	35-300mm	±5μm	2μm
401-024-01	0-570mm	35-600mm	±5μm	2μm
401-040-01	570-1000mm	600-1000mm	±5μm	2μm

296 DIGITAL RADIUS GAUGE

Data output

CR2032

VIDEO

- Measure radius of internal and external arcs
- Accuracy: ±0.01R, R is the radius to be measured in mm
- Data output (cable code: 200-01 or 200-02), can't output radius
- Supplied with 5 jaws for different sizes of arc

Measure shaft



Measure bore





unit: mm

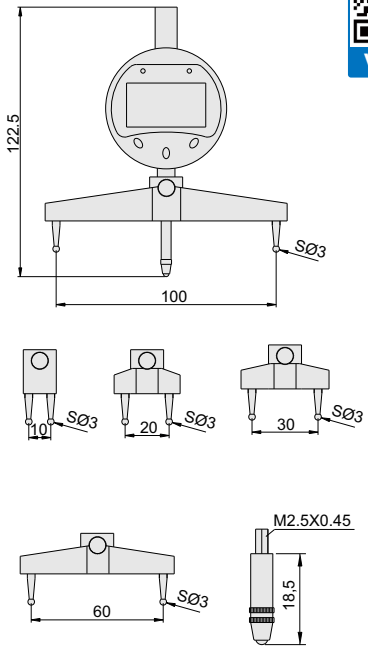

Code	Range of external radius	Range of internal radius	Resolution
296-700-11	5-910mm/0.2-35.83"	7-910mm/0.3-35.83"	0.01mm/0.001"

SERIES 406 LARGE RANGE DIGITAL RADIUS GAUGE

Data output

CR2032



406-590-44

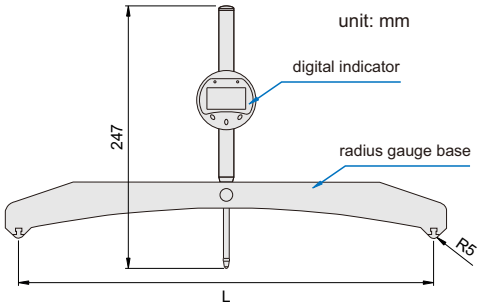

- Measure radius of internal or external arcs
- Resolution: 0.01mm/0.001"
- Buttons: on/off, hold, mm/inch, S (select jaws), ZERO
- Automatic power off (time is adjustable)
- Data output(cable code:200-05 or 200-06, output radius)

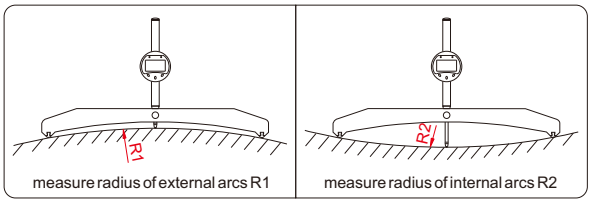

Digital indicator

Code	Range	Resolution	Accuracy	Repeatability
406-002-12	0-50.8mm/0-2"	0.01mm/0.001"	0.03mm	0.01mm

Radius gauges (without digital indicator)

Code	L
406-025-BASE	100
406-100-BASE	200
406-442-BASE	300
406-590-BASE	400

Radius gauges (with digital indicator)

Code	Range of external radius (R1)	Range of internal radius (R2)	Accuracy(mm)*	L
406-025-11	100-625mm/4-24"	100-625mm/4-24"	±0.005R	100
406-100-12	300-2500mm/12-98"	300-2500mm/12-98"	±0.005R	200
406-442-13	500-11250mm/20-442"	500-11250mm/20-442"	±0.005R	300
406-590-14	1100-15000mm/44-590"	1100-15000mm/44-590"	±0.005R	400

Set

Code	Range of external radius (R1)	Range of internal radius (R2)	Accuracy(mm)*	Measuring jaw
406-590-44	100-15000mm/4-590"	100-15000mm/4-590"	±0.005R*	100mm, 200mm, 300mm,400mm

* R is the radius to be measured. For example, radius is 100mm, the accuracy is ±0.005x100=±0.5mm

SERIES 956 CIRCUMFERENCE TAPE

- Measure diameter and circumference of pipes, trees, etc.
- Guaduation: 0.1mm
- Accuracy:
  Circumference:±1.5mm
  Diamater: ±0.5mm
- Laser engraved scale
- Made of stainless steel



956-012-11

unit: mm

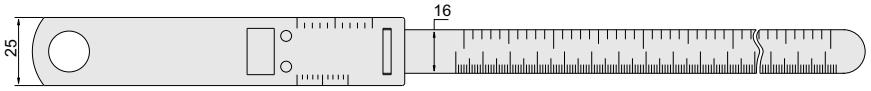

Code	Range	
	Diameter	Circumference
956-012-11	20 - 300mm	60 - 950mm
956-028-11	300 - 700mm	940 - 2200mm
956-044-11	700 - 1100mm	2190 - 3460mm

SERIES 955 CIRCUMFERENCE TAPE

- Measure diameter and circumference of pipes, trees, tires, etc.
- Laser engraved scale
- Made of stainless steel



955-122-11

unit: mm

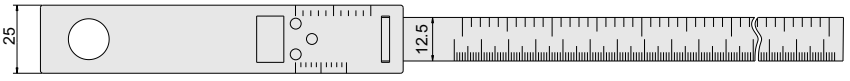

Code	Range		Guaduation	Accuracy	
	Diameter	Circumference		Diameter	Circumference
955-012-11	20 - 300mm	60-950mm	0.1mm	±0.20mm	±0.60mm
955-028-11	300 - 700mm	940-2200mm	0.1mm	±0.20mm	±0.60mm
955-044-11	700 - 1100mm	2190-3460mm	0.1mm	±0.20mm	±0.60mm
955-060-11	1100-1500mm	3450-4720mm	0.1mm	±0.30mm	±0.90mm
955-075-11	1500-1900mm	4710-5980mm	0.1mm	±0.30mm	±0.90mm
955-090-11	1900-2300mm	5960-7230mm	0.1mm	±0.35mm	±1.05mm
955-106-11	2300-2700mm	7220-8500mm	0.1mm	±0.40mm	±1.20mm
955-122-11	2700-3100mm	8480-9760mm	0.1mm	±0.45mm	±1.35mm
955-138-11	3100-3500mm	9730-11010mm	0.1mm	±0.50mm	±1.50mm
955-153-11	3600-3900mm	11000-12260mm	0.1mm	±0.55mm	±1.65mm
955-169-11	3900-4300mm	12250-13500mm	0.1mm	±0.60mm	±1.80mm

Application

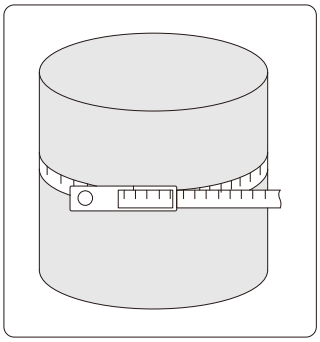

SERIES 201 LINEAR GAUGE

IP65

- Suitable for measuring the height, thickness, squareness, coaxiality and so on.
- IP65 protection level
- High frequence:100 times/s, can measure high speed workpiece
- Output signal:90° phase difference wave
- Standard cable length: 2m
- Long working life due to the special bearing



201-010-11

Interface(RS232)



Interface(Pin4)

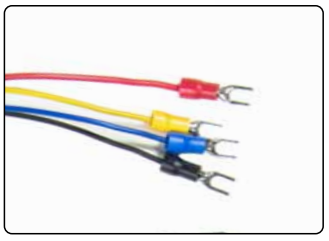

unit: mm

Single gauge application

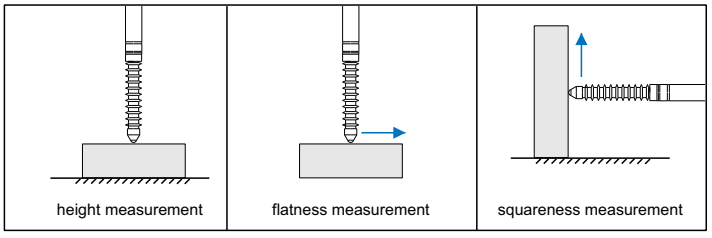

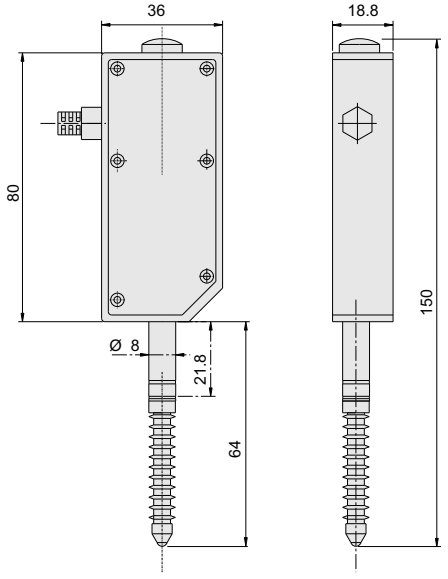

Multi-gauges application

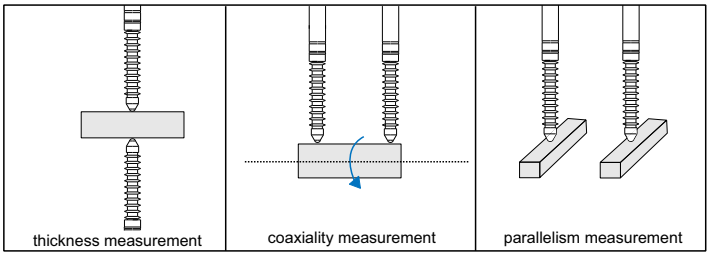

Resolution 0.001mm

Code	Interface	Range	Measuring force	Stem	Accuracy	Hysteresis
201-010-01	Pin4	0-12.7mm	1.5N	Ø8mm	5μm	2μm
201-010-02	RS232	0-12.7mm	1.5N	Ø8mm	5μm	2μm

Resolution 0.01mm

Code	Interface	Range	Measuring force	Stem	Accuracy	Hysteresis
201-010-11	Pin4	0-12.7mm	1.5N	Ø8mm	20μm	10μm
201-010-12	RS232	0-12.7mm	1.5N	Ø8mm	20μm	10μm

206 DISPLAY UNIT FOR LINEAR GAUGE

- High and low limits with judgement
- With control signal input interface
- With input/output interface
- Power: supply DC9-24V



Software(included)

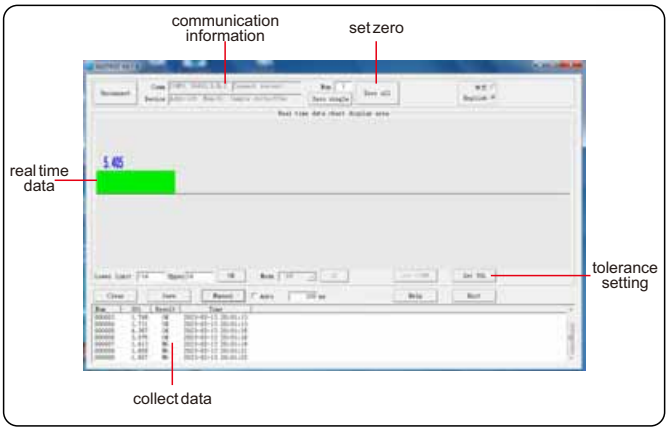

unit: mm

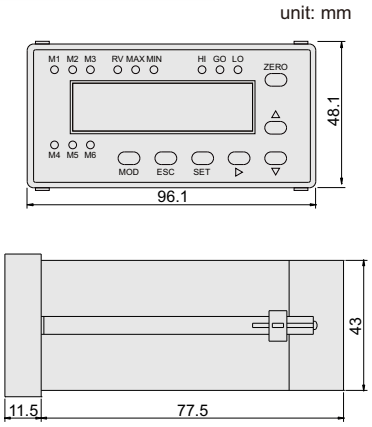

Signal

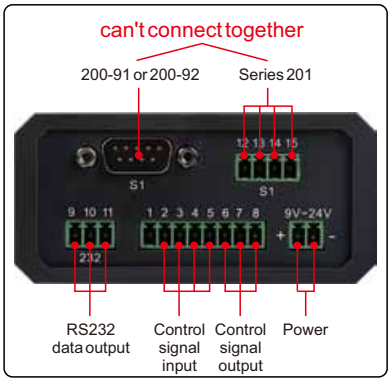

Connected digital indicator

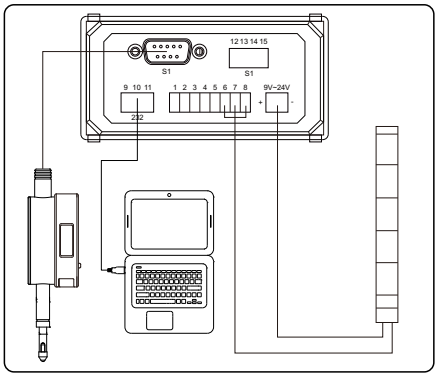

Connected linear gauge

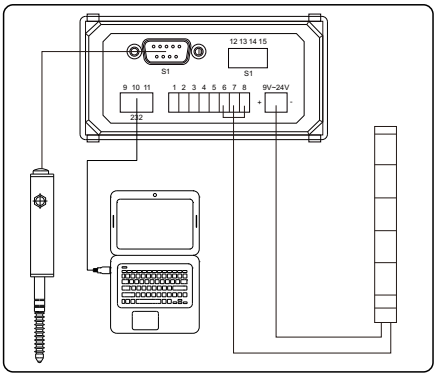

Code	206-010-01
Display	6 digits
Quantity of linear gauge or digital indicator to be connected	1pc
Tolerance signal	tolerance and judgement with alarm and lights(out of upper tolerance, within tolerance, out of lower tolerance)
Output control	output the tolerance judgement (out of upper tolerance, within tolerance, out of lower tolerance) to control external devices
External control	control the display units from external devices (set zero, hold reading and collect data)
Data output	connect to computer software and serial communication port
Power supply	DC 9~24V

206-13(Optional)



OPTIONAL ACCESSORIES

Code	Name	Power	Remark
206-13	alarm lamp	12V	with buzzer

- With data recording software, can transfer the data into Excel

Software(included)

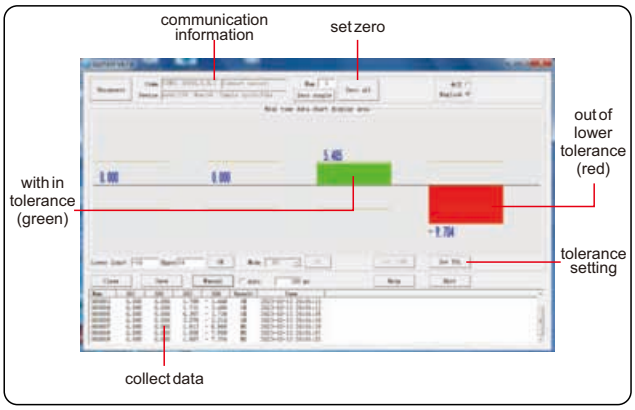

back



208-004-01

unit: mm

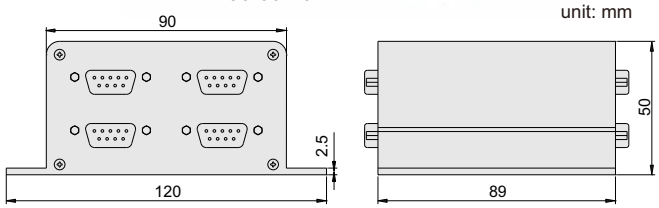

back





208-008-01

unit: mm

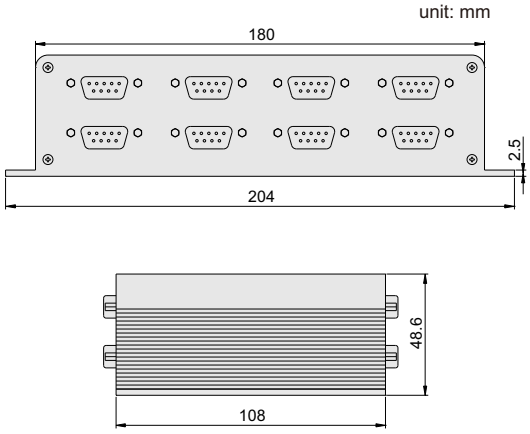

Connected digital indicator

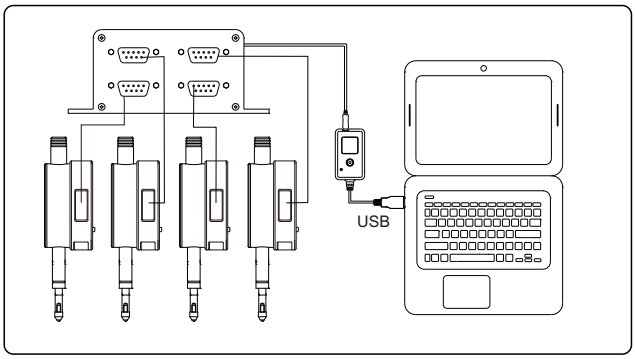

Connected linear gauge

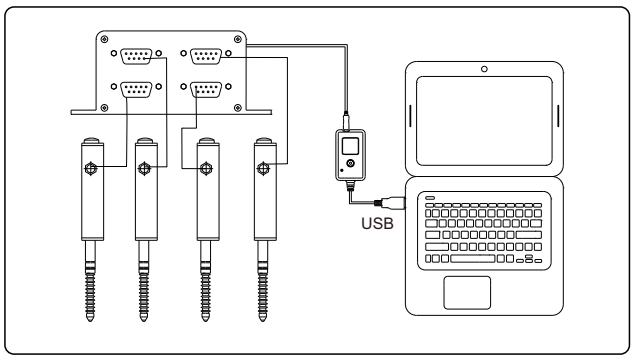

Code	Gauges input	Interface
208-004-01	4	RS232/485
208-008-01	8	RS232/485

SERIES 205 LINEAR GAUGES AND DISPLAY UNIT



205-010-01

Spindle lift knob is included



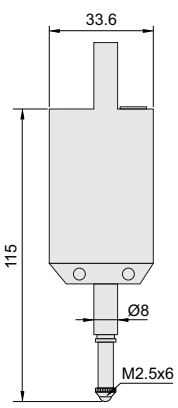

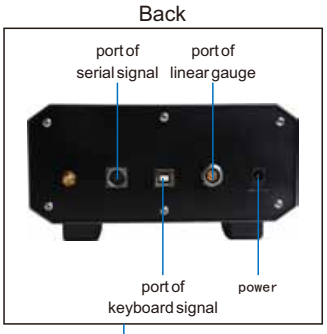



205-000-01

- Linear gage type: optical grating
- Dispaly unit: display displacement data in real time, data presetset tolerance and make judgment (out of upper tolerance, within tolerance, out of lower tolerance), set zero, change measuring direction, resolution (0.1um/1 um), unit switch (um/mm/inch)
- Two data transmission methods: can output keyboard signal anodata can be transmitted to excel, word, txt etc, can also outputserial signal and transmit data to serial communication software

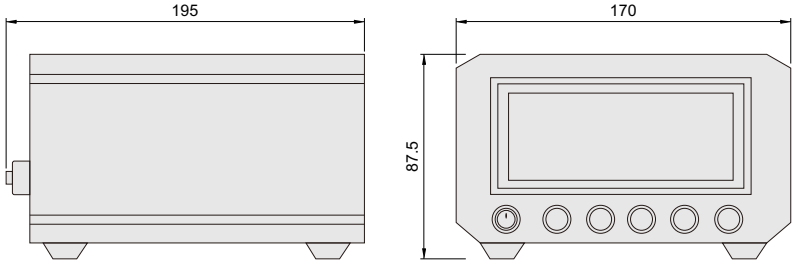

Application



LINEAR GAGE SPECIFICATION

Code	205-010-01	205-010-11
Range	12.7mm	12.7mm
Resolution	0.1μm	1μm
Accuracy (19~20°C)	1μm	3μm
Repeatability	0.2μm	2μm
Linear gage type	optical grating	
Working life	ten million times	
Dust/waterproof	IP50	
Measuring force	0.7±0.3N	
Cable length	900mm	
Operation environment	0~40°C, 20~80%RH	
Power supply	5~24V	
Dimension (LxWxH)	33.6x15x115mm	
Weight	133g	

DISPLAY UNIT SPECIFICATION

Code	205-000-01
Display	4" LCD screen
Unit	μm, mm
Quantity of linear gage to be connected	1pc
Dimension (LxWxH)	170x195x87.5mm
Weight	1.45kg

SERIES 210 DIGITAL INDICATOR

Certificate | Data output | CR2032

- Button: tolerance set, data preset, inch/mm conversion, measuring direction set, max./min./range measurement, absolute/incremental measurement
- Data output(cable code:200-03 or 200-04)
- Automatic power off
- Supplied with flat and lug back

VIDEO



210-010-03

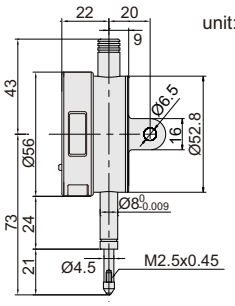

Range: 0-12.7mm

Resolution 0.001mm/0.00005"

Code	Range	Accuracy	Hysteresis
210-010-03	12.7mm/0.5"	5μm	2μm
210-025-03	25.4mm/1"	5μm	3μm
210-050-03	50.8mm/2"	6μm	3μm

Resolution 0.01mm/0.0005"

Code	Range	Accuracy	Hysteresis
210-010-13	12.7mm/0.5"	20μm	10μm
210-025-13	25.4mm/1"	20μm	10μm
210-050-13	50.8mm/2"	30μm	10μm

With manufacturer inspection certificate

Styli(optional)



Application

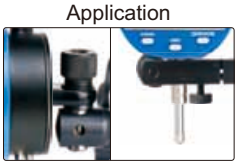

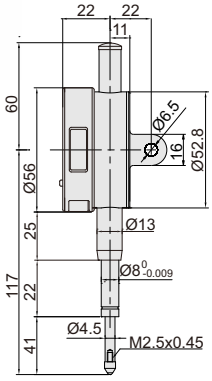

Range: 0-25.4mm

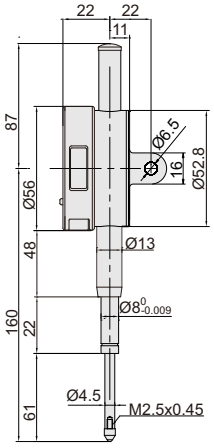

Range: 0-50.8mm

SERIES 211 DIGITAL INDICATOR

Certificate | Data output | CR2032

- With analog reading
- Button: tolerance set, data preset, inch/mm conversion, measuring direction set, max./min./range measurement, absolute/incremental measurement
- Data output(cable code:200-03 or 200-04)
- Automatic power off
- Supplied with flat and lug back

VIDEO



211-010-13

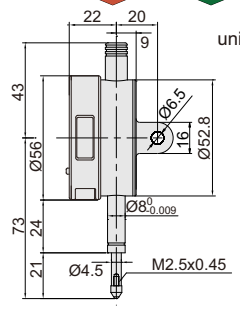

Range: 0-12.7mm

Resolution 0.001mm/0.00005"

Code	Range	Accuracy	Hysteresis
211-010-03	12.7mm/0.5"	5μm	2μm
211-025-03	25.4mm/1"	5μm	3μm
211-050-03	50.8mm/2"	6μm	3μm

Resolution 0.01mm/0.0005"

Code	Range	Accuracy	Hysteresis
211-010-13	12.7mm/0.5"	20μm	10μm
211-025-13	25.4mm/1"	20μm	10μm
211-050-13	50.8mm/2"	30μm	10μm

With manufacturer inspection certificate

Styli(optional)



Application



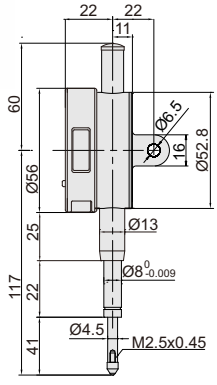

Range: 0-25.4mm

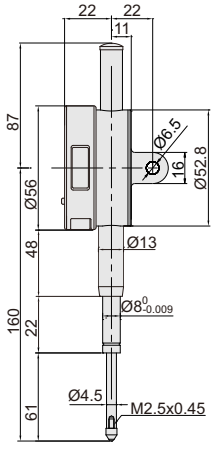

Range: 0-50.8mm

SERIES 212 DIGITAL INDICATOR

Certificate | Data output | CR2032

- Button: on/off, zero, inch/mm conversion, measuring direction set, data preset absolute/incremental measurement
- Data output(cable code:200-03 or 200-04)
- Automatic power off
- Supplied with flat and lug back

VIDEO



212-010-13

Styli**(optional)**



Series 270

Application



unit: mm

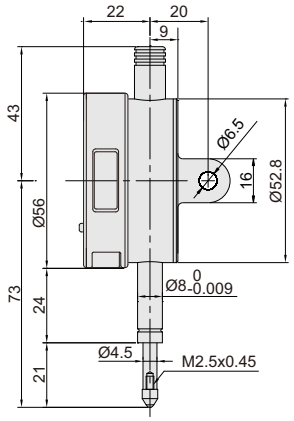

Range: 0-12.7mm

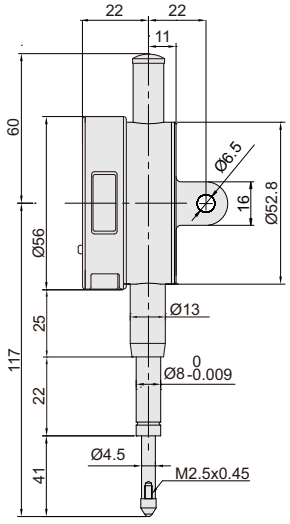

Range: 0-25.4mm

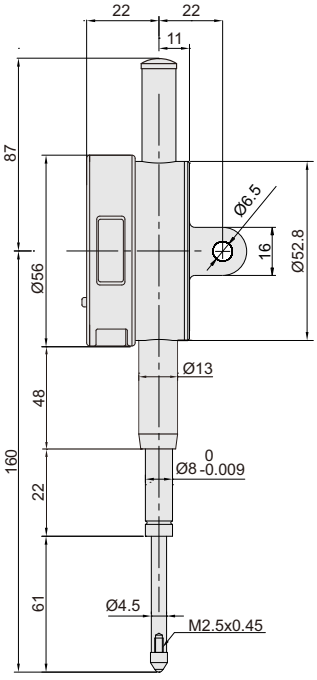

Range: 0-50.8mm

Resolution 0.001mm/0.00005"

Code	Range	Accuracy	Hysteresis
212-010-03	12.7mm/0.5"	5μm	2μm
212-025-03	25.4mm/1"	5μm	3μm
212-050-03	50.8mm/2"	6μm	3μm

Resolution 0.01mm/0.0005"

Code	Range	Accuracy	Hysteresis
212-010-13	12.7mm/0.5"	20μm	10μm
212-025-13	25.4mm/1"	20μm	10μm
212-050-13	50.8mm/2"	30μm	10μm

With manufacturer inspection certificate

SERIES 216 DIGITAL INDICATOR

Certificate | Data output | CR2032

- Reading in digital and analog
- Display can be rotated by 320°
- Button : on/off, zero, tolerance Go and No-Go display, data preset, measuring direction change, max./min./TIR, absolute/incremental measurement,mm/inch,data output
- Keep preset data and tolerance data in memory after restart
- Automatic power off
- Data output (cable code: 200-01 or 200-02)
- Supplied with lug and flat back



216-010-01



display can be rotated by 320°

unit: mm

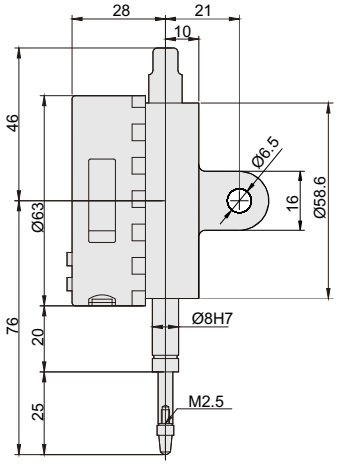

Range:0-12.7mm

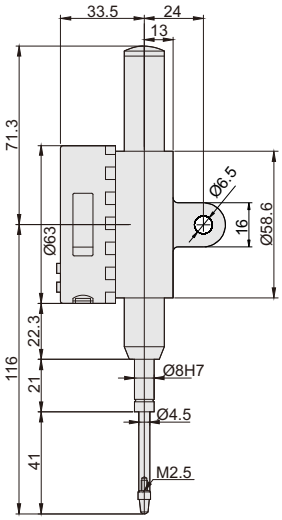

Range: 0-25.4mm

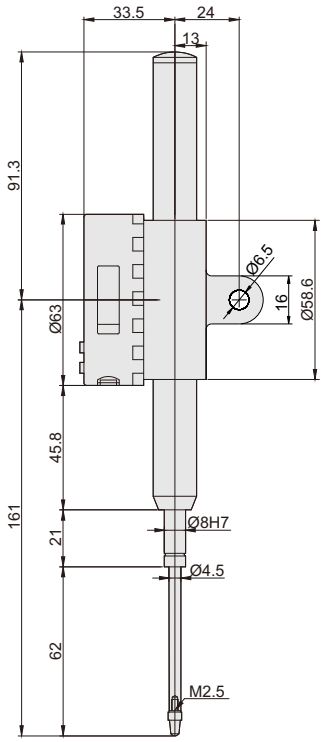

Range: 0-50.8mm

Resolution 0.001mm/0.00005"

Code	Range	Accuracy	Hysteresis
216-010-01	12.7mm/0.5"	5μm	2μm
216-025-01	25.4mm/1"	5μm	3μm
216-050-01	50.8mm/2"	6μm	3μm

Resolution 0.002mm/0.00005"

Code	Range	Accuracy	Hysteresis
216-010-11	12.7mm/0.5"	20μm	10μm
216-025-11	25.4mm/1"	20μm	10μm
216-050-11	50.8mm/2"	30μm	10μm

With manufacturer inspection certificate

Contact points **(optional)**



Series **270**

Application



SERIES 213 WATERPROOF DIGITAL INDICATOR

Certificate | Data output | CR2032 | IP65 | IP54

- Dust/waterproof
- Button: on/off, zero, inch/mm conversion, measuring direction set, data preset absolute/incremental measurement
- Automatic power off
- Data output(cable code:200-01 or 200-02)
- Supplied with lug and flat back

VIDEO



213-010-01

Styli**(optional)**



Series 270

Application



unit: mm

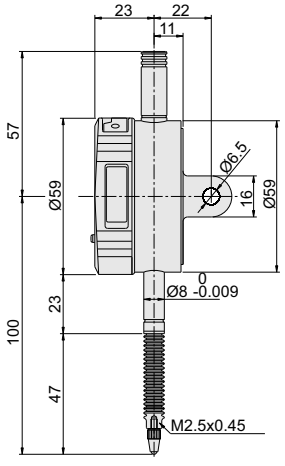

Range: 0-12.7mm

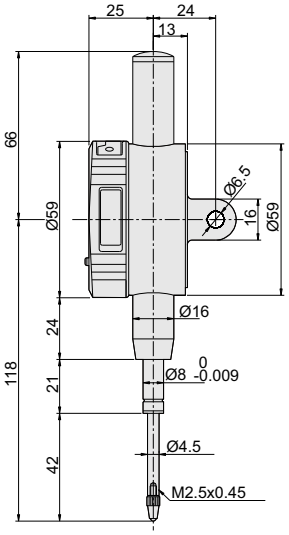

Range: 0-25.4mm

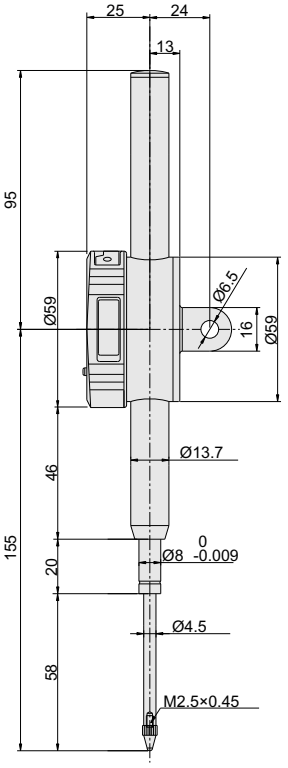

Range: 0-50.8mm

Resolution 0.001mm/0.00005"

Code	Range	Proof level	Accuracy	Hysteresis
213-010-01	12.7mm/0.5"	IP65	5μm	2μm
213-025-01	25.4mm/1"	IP54	5μm	3μm
213-050-01	50.8mm/2"	IP54	6μm	3μm

Resolution 0.01mm/0.0005"

Code	Range	Proof level	Accuracy	Hysteresis
213-010-11	12.7mm/0.5"	IP65	20μm	10μm
213-025-11	25.4mm/1"	IP54	20μm	10μm
213-050-11	50.8mm/2"	IP54	30μm	10μm

With manufacturer inspection certificate

SERIES 214 DIGITAL INDICATOR

Certificate | Data output | CR2032

- Button: on/off, zero, inch/mm conversion, measuring direction set, data preset absolute/incremental measurement
- Automatic power off
- Data output(cable code:200-01 or 200-02)
- Supplied with flat back

VIDEO



214-005-12

unit: mm

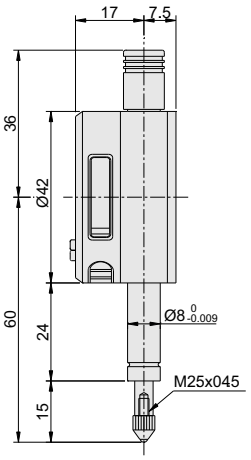

Styli(optional)



Application



Resolution 0.001mm/0.00005"

Code	Range	Accuracy	Hysteresis
214-005-02	5mm/0.2"	5μm	3μm

Resolution 0.01mm/0.0005"

Code	Range	Accuracy	Hysteresis
214-005-12	5mm/0.2"	20μm	10μm

With manufacturer inspection certificate

SERIES 214 DIGITAL INDICATOR

Data output | CR2032

- Button: on/off, zero, inch/mm conversion, measuring direction set, data preset absolute/incremental measurement
- Automatic power off
- Data output(cable code:200-01 or 200-02)
- Supplied with lug and flat back

VIDEO



214-100-11

unit: mm

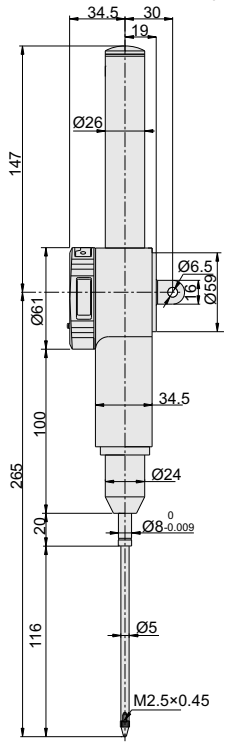

Styli(optional)



Application

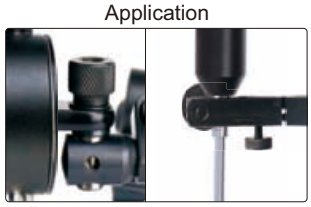

Resolution 0.001mm/0.00005"

Code	Range	Accuracy	Hysteresis
214-100-01	100mm/4"	9μm	3μm

Resolution 0.01mm/0.0005"

Code	Range	Accuracy	Hysteresis
214-100-11	100mm/4"	30μm	10μm

SERIES 217 HIGH PRECISION DIGITAL INDICATOR

Certificate IP54 Charge

- With analog reading
- Supplied with cable for communication
- Button: data output, on/off, zero, inch/mm conversion, measuring direction set, data preset absolute/ incremental measurement, max./min./range measurement, tolerance set, hold
- Ip54 protection level
- Automatic power off
- Power: rechargeable battery, for 30 hours continuous working(full charge)



217-015-01

Contact points **(optional)**



Series **270**

Cable (Included)



Application





display can be rotated by 270°

unit: mm

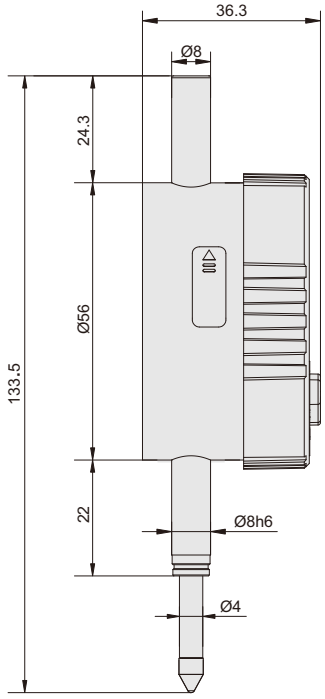

217-015-01

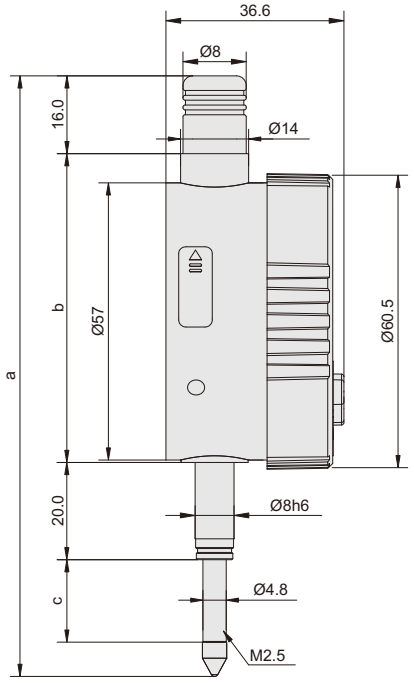

217-010-01, 217-025-01 and 217-050-01

Code	Range	Resolution	Accuracy	Hysteresis	Styli
217-015-01	15mm/0.6"	0.0005mm/0.00002"	2μm	1.5μm	Carbide

Code	Range	Resolution	Accuracy	Hysteresis	Styli	a	b	c
217-010-01	12.7mm/0.5"	0.0005mm/ 0.00002"	2μm	1.5μm	Carbide	118.7	61	14.7
217-025-01	25. 4mm/1"		2μm	1.5μm	Carbide	151.7	81	27.7
217-050-01	50. 8mm/2"		4μm	2μm	Carbide	222.2	126	53.2

With manufacturer inspection certificate

SERIES 217 HIGH PRECISION DIGITAL INDICATOR

Certificate | IP54 | Charge

- Built-in bluetooth
- Supplied with cable for communication
- Button: data output, on/off, zero, inch/mm conversion, measuring direction set, data preset absolute/ incremental measurement, max./min./range measurement, tolerance set, hold, resolution adjustment
- IP54 protection level
- Automatic power off
- Power: rechargeable battery, for 30 hours continuous working(full charge)



217-015-01H

Cable (Included)



Application



Contact points **(optional)**



Series **270**



display can be rotated by 270°



Smart phone, Computer, Ipad

unit: mm

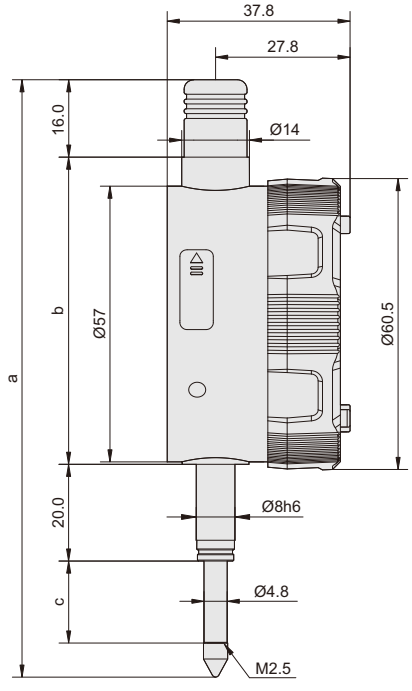

Code	Range	Resolution(adjustable)	Accuracy	Hysteresis	Styli	a	b	c
217-010-01H	12.7mm/0.5"	0.0005mm/0.00002" 0.001mm/0.00005"	2μm	1.5μm	Carbide	118.7	61	14.7
217-015-01H	15mm/0.6"		2μm	1.5μm	Carbide	123.7	63.5	17
217-025-01H	25. 4mm/1"		2μm	1.5μm	Carbide	151.7	81	27.7
217-050-01H	50. 8mm/2"		4μm	2μm	Carbide	222.2	126	53.2

With manufacturer inspection certificate

SERIES 218 HIGH PRECISION DIGITAL INDICATOR

Certificate

Charge

- Linear ball bearings for ten million times use
- Absolute encoder, the original data remains after power off
- Reading in digital and analog
- Supplied with cable for communication
- Button: tolerance, data preset, data hold, measuring direction change, max./min./TIR, power off time, on/off, mm/inch, resolution adjustment
- Power: rechargeable battery, for 24 hours continuous working(full charge)



218-010-01



218-025-01

VIDEO

Cable (Included)



unit: mm

Lifting lever (Included)



Application



Contact points **(optional)**



Series **270**



display can be rotated by 320°

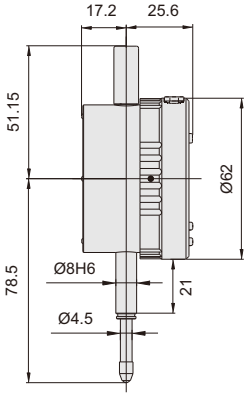

Range:0-12.7mm

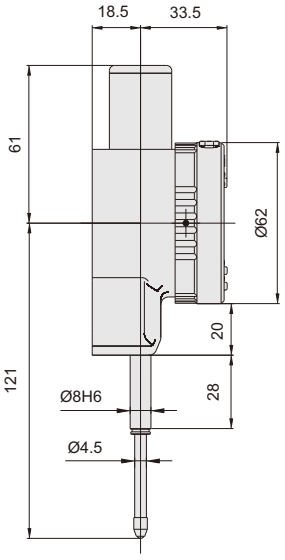

Range:0-25.4mm

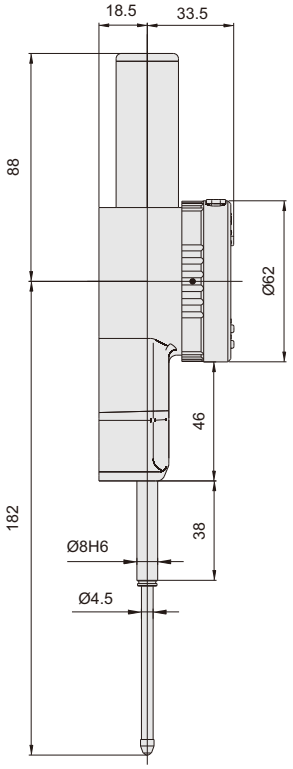

Range:0-50.8mm

Code	Range	Resolution(adjustable)	Accuracy	Hysteresis	Styli	Back
218-010-01	12.7mm/0.5"	0.0001mm/0.00001" 0.001mm/0.00005" 0.01mm/0.0005"	1.5μm	1μm	Ruby	flat
218-025-01	25.4mm/1"		1.8μm	1μm	Ruby	flat

Code	Range	Resolution(adjustable)	Accuracy	Hysteresis	Styli	Back
218-010-11	12.7mm/0.5"	0.0005mm/0.00002" 0.001mm/0.00005" 0.01mm/0.0005"	3μm	1.5μm	Carbide	flat
218-025-11	25.4mm/1"		3μm	1.5μm	Carbide	flat
218-050-11	50.8mm/2"		3μm	1.5μm	Carbide	flat

With manufacturer inspection certificate

SERIES 218 WIRELESS HIGH PRECISION DIGITAL INDICATOR

Certificate

Charge

- Built-in bluetooth
- Absolute encoder, the original data remains after power off
- Reading in digital and analog
- Supplied with cable for communication
- Button: data output, tolerance, data preset, data hold, measuring direction change, max./min./TIR, power off time, on/off, mm/inch, resolution adjustment
- Power: rechargeable battery, for 24 hours continuous working(full charge)



218-010-01W



218-025-01W

VIDEO

Lifting lever (Included)





display can be rotated by 320°



Cable (Included)



unit: mm

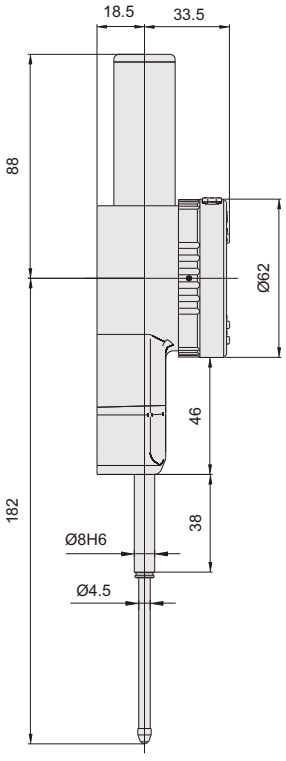

0-50.8mm

Contact points **(optional)**



Series **270**

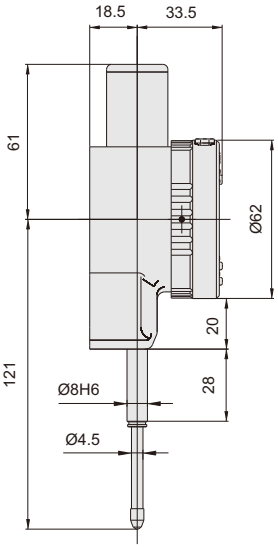

0-25.4mm

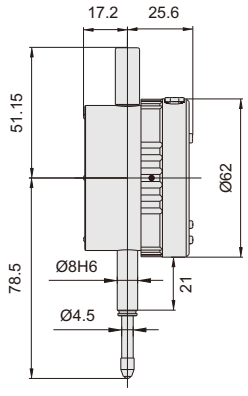

0-12.7mm

Application



Code	Range	Resolution(adjustable)	Accuracy	Hysteresis	Styli	Back
218-010-01W	12.7mm/0.5"	0.0001mm/0.00001" 0.001mm/0.00005" 0.01mm/0.0005"	1.5μm	1μm	Ruby	flat
218-025-01W	25.4mm/1"		1.8μm	1μm	Ruby	flat

Code	Range	Resolution(adjustable)	Accuracy	Hysteresis	Styli	Back
218-010-11W	12.7mm/0.5"	0.0005mm/0.00002" 0.001mm/0.00005" 0.01mm/0.0005"	3μm	1.5μm	Carbide	flat
218-025-11W	25.4mm/1"		3μm	1.5μm	Carbide	flat
218-050-11W	50.8mm/2"		3μm	1.5μm	Carbide	flat

With manufacturer inspection certificate

SERIES 215 DIGITAL INDICATOR FOR BORE GAUGE

Certificate | Data output | CR2032

- Specially designed for bore gauges
- The minimum value tracking function can find the diameter automatically
- Read the diameter directly, after inputting the size of setting ring
- Reading in digit and analog
- Button: minimum value tracking, calibration, data preset, inch/metric conversion, absolute/incremental measurement
- Automatic power off
- Data output(cable code:200-03 or 200-04)

VIDEO



215-010-12

unit: mm

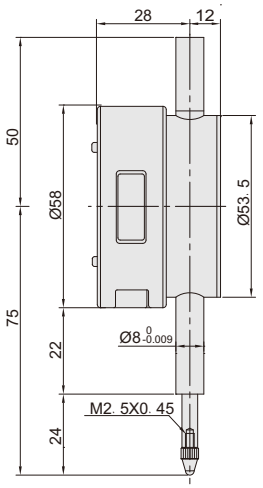

Resolution 0.001mm/0.00005"

Code	Range	Accuracy(fges)	Hysteresis(f_u)	Remark
215-010-02	12.7mm/0.5"	5μm	2μm	flat back

Resolution 0.002mm/0.0001"

Code	Range	Accuracy(fges)	Hysteresis(f_u)	Remark
215-010-12	12.7mm/0.5"	20μm	10μm	flat back

With manufacturer inspection certificate

Application



Series 251**(optional)**

SERIES 227 DIGITAL INDICATOR WITH LIFTING LEVER

Data output | CR2032

- Button: on/off, zero, inch/mm conversion, measuring direction set, data preset absolute/incremental measurement
- Data output(cable code:200-03 or 200-04)
- Automatic power off

VIDEO



227-010-12

unit: mm

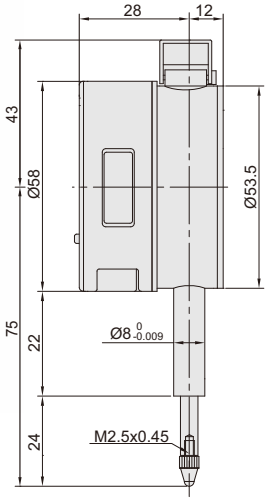

Styli**(optional)**



Series 270

Application



Resolution 0.001mm/0.00005"

Code	Range	Accuracy(fges)	Hysteresis(f_u)	Remark
227-010-02	10mm/0.4"	5μm	2μm	flat back

Resolution 0.01mm/0.0005"

Code	Range	Accuracy(fges)	Hysteresis(f_u)	Remark
227-010-12	10mm/0.4"	20μm	10μm	flat back

470 DIAL COMPARATORE

Jeweled | Shock proof

- Meet DIN879-1
- Shockproof
- Jeweled bearing
- Overtravel: 3mm
- Supplied with limit pointers
- Initial measuring force 1.2N



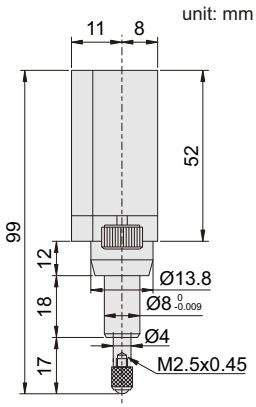

Application





Code	Range	Graduation	Accuracy	Hysteresis	Dial reading	Maximum measuring force
470-001-01	0.1mm	0.001mm	1.2μm	0.5μm	50-0-50	1.5N

SERIES 222 DIAL INDICATOR

Certificate | Jeweled

- Graduation: 0.001mm
- With limit hands
- Jeweled bearing
- Rang per revolution: 0.2mm
- With lock screw



222-001-01

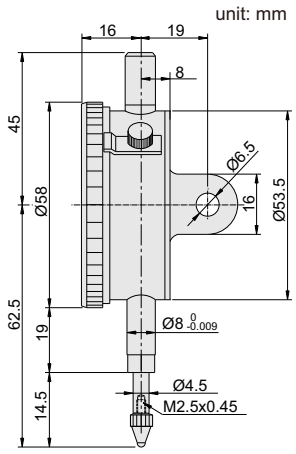

Styli**(optional)**



Application



Code	Range	Back	Scale	Accuracy	Hysteresis
222-001-01	1mm	lug	0-100-0	5μm	2μm
222-001-02	1mm	flat	0-100-0	5μm	2μm

With manufacturer inspection certificate

SERIES 221 DIAL INDICATOR

Certificate Jeweled

- Graduation: 0.001mm
- With limit hands
- Jeweled bearing
- Rang per revolution: 0.2mm
- Supplied with lug and flat back



unit: mm

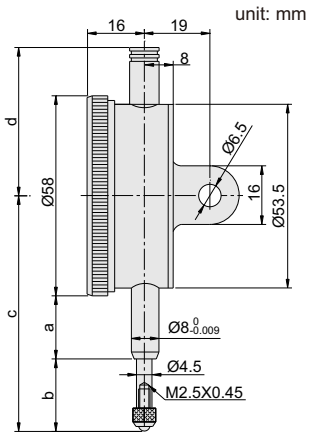

Styli(optional)



Series 270

Application

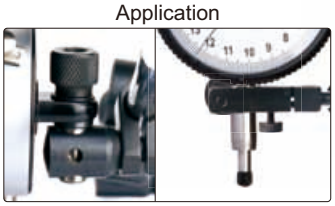

221-001-01

Code	Range	Scale	Accuracy	Hysteresis	a	b	c	d
221-001-01	1mm	0-200	5μm	2μm	15	19.5	62.5	45
221-003-01	3mm	0-200	10μm	4μm	10	21.5	59.5	41.5
221-005-01	5mm	0-200	10μm	4μm	10	21.5	59.5	41.5

With manufacturer inspection certificate

228 DIAL INDICATOR

Certificate Jeweled

- Bezel: Ø40mm
- Graduation: 0.001mm
- With limit hands
- Jeweled bearing
- Supplied with lug and flat back



unit: mm

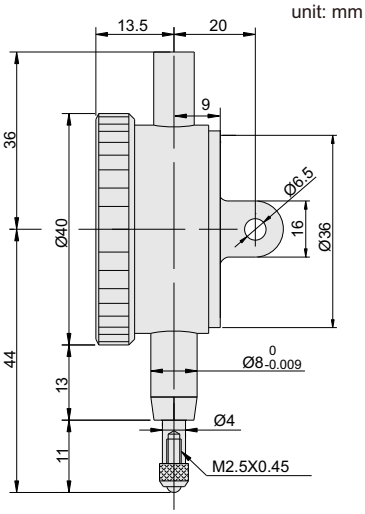

Application



228-001-01

Contact points **(optional)**



Series **270**

Code	Range	Accuracy	Hysteresis	Range/rev	Scale
228-001-01	1mm	5μm	2μm	0.1mm	0-100

With manufacturer inspection certificate

SERIES 222 DIAL INDICATOR

Certificate Jeweled

- Graduation: 0.01mm
- With limit hands
- Jeweled bearing
- Range per revolution: 1mm
- With lock screw



222-010-11

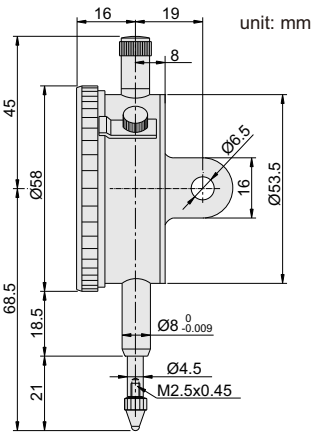

Styli(optional)



Application



Code	Range	Back	Accuracy	Hysteresis	Scale
222-003-11	3mm	lug	14μm	3μm	0-100
222-005-11	5mm	lug	16μm	3μm	0-100
222-010-11	10mm	lug	17μm	3μm	0-100
222-003-12	3mm	flat	14μm	3μm	0-100
222-005-12	5mm	flat	16μm	3μm	0-100
222-010-12	10mm	flat	17μm	3μm	0-100

With manufacturer inspection certificate

SERIES 223 DIAL INDICATOR

Certificate

- Graduation: 0.01mm
- With limit hands
- Range per revolution: 1mm
- With lock screw



223-010-11

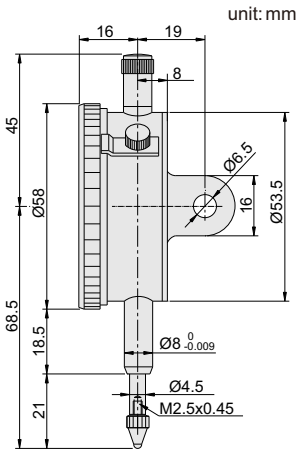

Styli(optional)



Application



Code	Range	Back	Accuracy	Hysteresis	Scale
223-010-11	10mm	lug	20μm	3μm	0-100
223-010-12	10mm	flat	20μm	3μm	0-100

With manufacturer inspection certificate

SERIES 224 DIAL INDICATOR

Certificate Jeweled

- Graduation: 0.01mm
- With limit hands
- Jeweled bearing
- Range per revolution: 1mm
- With lock screw



224-010-11

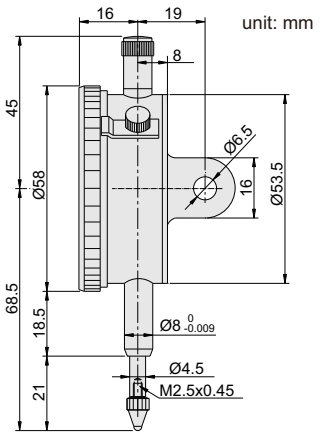

Styli(optional)



Application

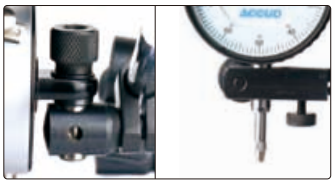

Package



Code	Range	Back	Accuracy	Hysteresis	Scale
224-010-11	10mm	lug	17μm	3μm	0-100
224-010-12	10mm	flat	17μm	3μm	0-100

With manufacturer inspection certificate

SERIES 226 SHOCKPROOF DIAL INDICATOR

Certificate Jeweled Shock proof

- Meet DIN878
- Shockproof
- Graduation: 0.01mm
- With limit hands
- Jeweled bearing
- Rang per revolution: 1mm
- With lock screw



226-010-11

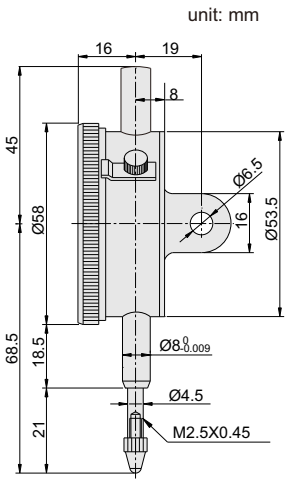

Styli(optional)



Application

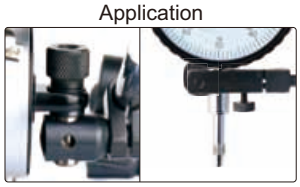

Code	Range	Back	Accuracy	Hysteresis	Scale	Maximum measuring force	Cap
226-003-11	3mm	lug	12μm	3μm	0-100	1.5N	can lift
226-005-11	5mm	lug	14μm	3μm	0-100	1.5N	can lift
226-010-11	10mm	lug	17μm	3μm	0-100	1.5N	can lift
226-003-12	3mm	flat	12μm	3μm	0-100	1.5N	can lift
226-005-12	5mm	flat	14μm	3μm	0-100	1.5N	can lift
226-010-12	10mm	flat	17μm	3μm	0-100	1.5N	can lift

With manufacturer inspection certificate

SERIES 228 DIAL INDICATOR



- Bezel: Ø40mm
- Graduation: 0.01mm
- With limit hands
- Jeweled bearing
- Rang per revolution: 1mm
- Supplied with lug and flat back



228-005-11

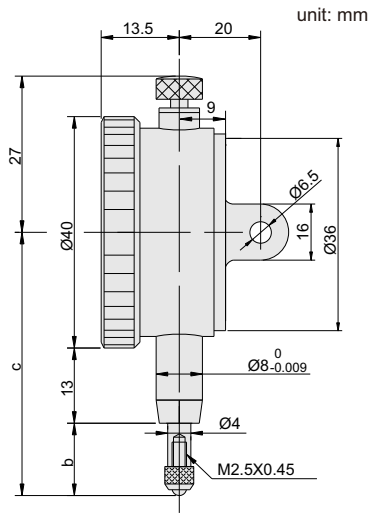

Styli(optional)



Application

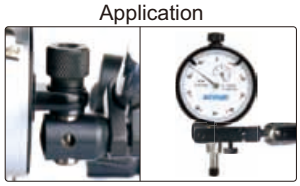

Code	Range	Accuracy	Hysteresis	Scale	b	c
228-003-11	3mm	14μm	3μm	0-100	11	44
228-005-11	5mm	16μm	3μm	0-100	12.5	45.5

With manufacturer inspection certificate

SERIES 228 COMPACT DIAL INDICATOR



- Meet DIN878
- Graduation: 0.01mm
- With limit hands
- Jeweled bearing
- With lock screw



228-005-61P

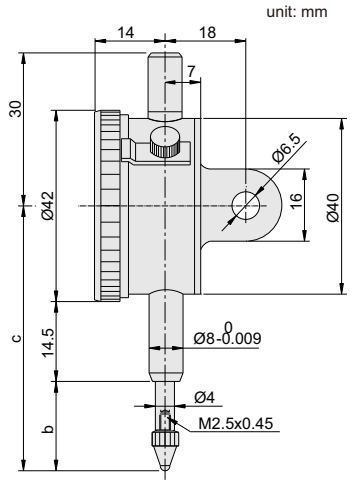

Styli(optional)



Application

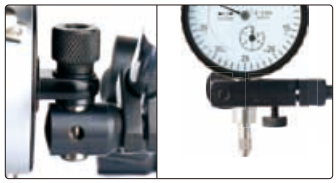

Code	Range	Accuracy	Hysteresis	Range/rev	Scale	Back	b	c
228-003-61P	3mm	12μm	3μm	0.5mm	0-50	lug	10.5	46
228-005-61P	5mm	14μm	3μm	0.5mm	0-50	lug	12.5	48
228-003-62P	3mm	12μm	3μm	0.5mm	0-50	flat	10.5	46
228-005-62P	5mm	14μm	3μm	0.5mm	0-50	flat	12.5	48

With manufacturer inspection certificate

SERIES 229 DIAL INDICATOR

Certificate

- Graduation: 0.01mm
- With limit hands
- Rang per revolution: 1mm
- Supplied with lug and flat back



229-030-11

unit: mm

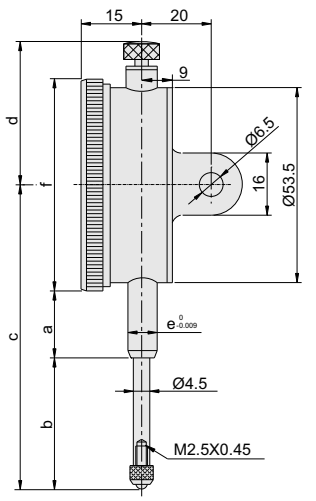

Styli(optional)



Series 270

Application



Code	Range	Accuracy	Hysteresis	Scale	a	b	c	d	e	f
229-020-11	20mm	25μm	5μm	0-100	20	35	83	37.5	Ø8	Ø58
229-030-11	30mm	35μm	7μm	0-100	20	40	88	37.5	Ø8	Ø58

With manufacturer inspection certificate

229 DIAL INDICATOR

Certificate

- Graduation: 0.01mm
- With limit hands
- Rang per revolution: 1mm
- Supplied with lug and flat back



unit: mm

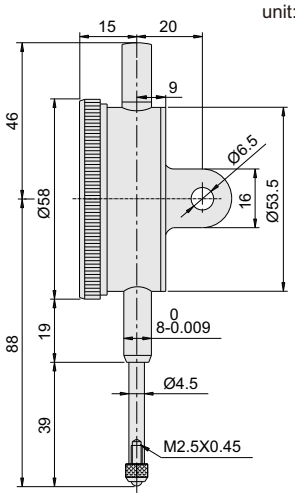

Styli(optional)



Series 270

Application

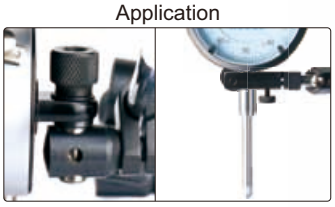

Code	Range	Accuracy	Hysteresis	Scale
229-025-11	25mm	35μm	7μm	0-100

With manufacturer inspection certificate

SERIES 229 DIAL INDICATOR

Note: 229-100-21 can only be used vertically

Certificate

- Graduation: 0.01mm
- With limit hands
- Rang per revolution: 1mm
- Supplied with lug and flat back

Stem clamp Ø10mm for **229-100-21** (included)



Styli**(optional)**



Application





229-050-21

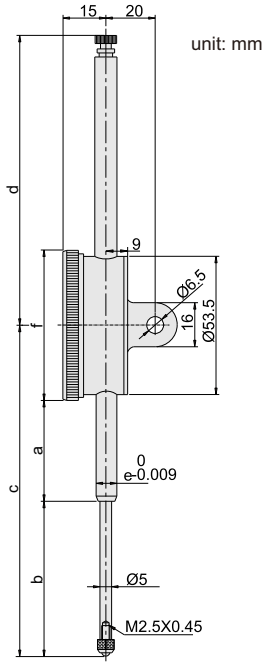

Code	Range	Accuracy	Hysteresis	Scale	a	b	c	d	e	f
229-050-21*	50mm	40μm	8μm	0-100	40	58	127	108	Ø8	Ø58
229-100-21	100mm	50μm	9μm	0-100	60	108	207	168	Ø10	Ø78

* **With manufacturer inspection certificate**

SERIES 229 DIAL INDICATOR

Certificate

- Graduation: 0.01mm
- With limit hands
- With lock screw

Styli**(optional)**



Application

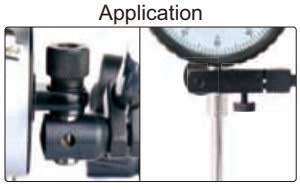



229-025-61P

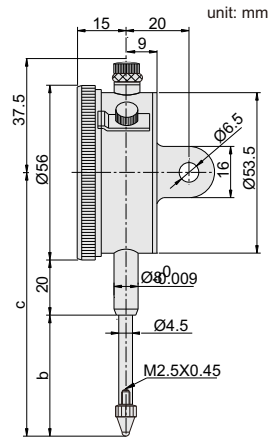

Code	Range	Accuracy	Hysteresis	Range/rev	Scale	Back	b	c
229-020-61P	20mm	25μm	5μm	1mm	0-100	lug	33	81
229-025-61P	25mm	35μm	7μm	1mm	0-100	lug	33	81
229-030-61P	30mm	35μm	7μm	1mm	0-100	lug	40	88
229-020-62P	20mm	25μm	5μm	1mm	0-100	flat	33	81
229-025-62P	25mm	35μm	7μm	1mm	0-100	flat	33	81
229-030-62P	30mm	35μm	7μm	1mm	0-100	flat	40	88

With manufacturer inspection certificate

231 WATERPROOF DIAL INDICATOR

Certificate | IP54 | Jeweled | Shock proof

- IP54 dust/waterproof
- Graduation:0.01mm
- Jeweled bearing

Styli(optional)



Series 270

Application

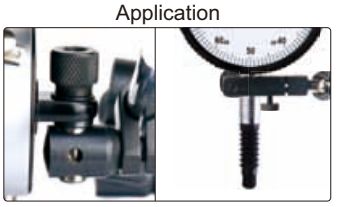



unit: mm

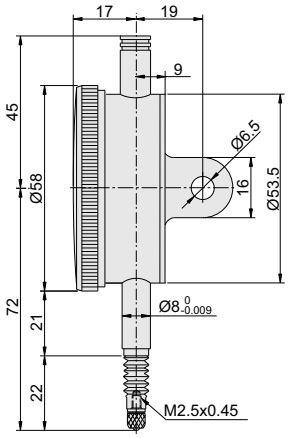

Code	Range	Accuracy(f_{ges})	Hysteresis(f_u)	Range/rev	Dial reading
231-010-11	10mm	17μm	3μm	1mm	0-100

With manufacturer inspection certificate

231 WATERPROOF DIAL INDICATOR

Certificate | IP54 | Jeweled | Shock proof

- Meet DIN878
- Graduation:0.01mm
- IP54 dust/waterproof
- Jeweled bearing
- Supplied with lug and flat back

Styli(optional)



Series 270

Application

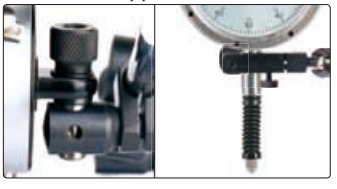



unit: mm

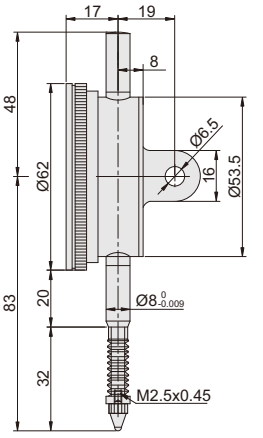

Code	Range	Accuracy	Hysteresis	Range/rev	Dial reading
231-010-21	10mm	17μm	3μm	1mm	0-100

With manufacturer inspection certificate

SERIES 232 ONE REVOLUTION DIAL INDICATOR

Certificate Shock proof

- Shock proof
- Supplied with lug and flat back

Styli(optional)



Series 270

Application

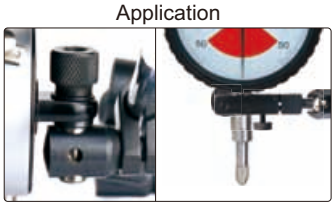



232-001-11

unit: mm

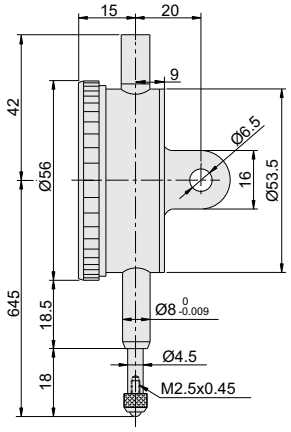

Code	Range	Graduation	Accuracy	Hysteresis	Dial reading
232-0005-11	0.5mm	0.01mm	9μm	3μm	25-0-25
232-001-11	1mm	0.01mm	9μm	3μm	50-0-50

With manufacturer inspection certificate

233 DOUBLE FACE DIAL INDICATOR

Certificate Jeweled



front side



reverse side

unit: mm

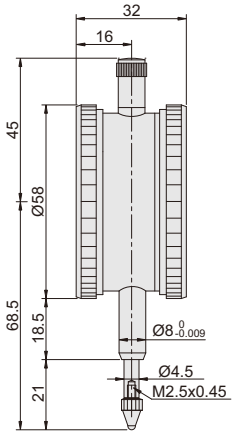

- Meet DIN878
- Read from both sides
- Jeweled bearing
- Supplied with limit pointers

Styli(optional)



Series 270

Application



Code	Range	Graduation	Accuracy	Hysteresis	Range/rev	Dial reading
233-010-11	10mm	0.01mm	17μm	3μm	1mm	0-100

With manufacturer inspection certificate

SERIES 230 DIAL INDICATOR

- Supplied with limit pointers and bezel clamp

Styli(optional)



Series 270

Application

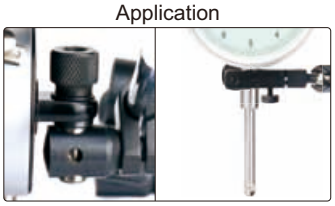



230-030-11

unit: mm

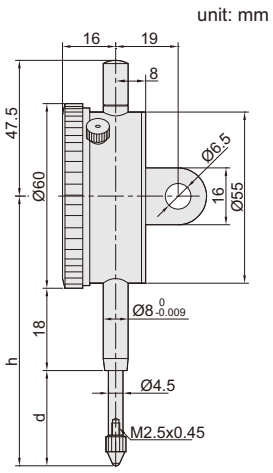

Code	Range	Graduation	Accuracy(fges)	Hysteresis(fu)	Range/rev	Dial reading	Remark	h	d
230-010-11	10mm	0.1mm	40μm	20μm	10mm	0-10mm	lug back	70	20
230-025-11	25mm	0.1mm	60μm	20μm	10mm	0-10mm	lug back	85	35
230-030-11	30mm	0.1mm	60μm	20μm	10mm	0-10mm	lug back	90	40

291 REVERSE DIAL INDICATOR

Jeweled Shock proof

- Shockproof
- Graduation: 0.01mm
- Reverse reading
- With limit hands
- Jeweled bearing
- Rang per revolution: 1mm
- Supplied with lug and flat back



unit: mm

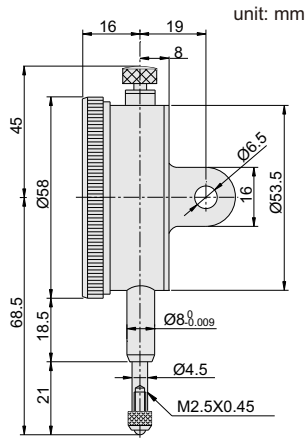

Styli(optional)



Series 270

Application

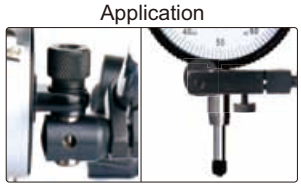

Code	Range	Accuracy	Hysteresis	Scale
291-010-I	10mm	17μm	3μm	0-100

292 REVERSE DIAL INDICATOR

- Graduation: 0.01mm
- Reverse reading
- With limit hands
- Rang per revolution: 1mm
- Supplied with lug and flat back

Application





unit: mm

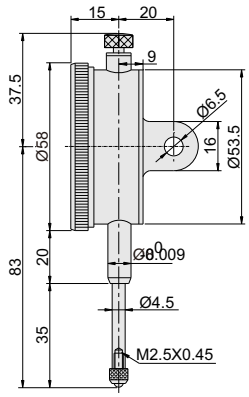

Styli(optional)



Series 270

Code	Range	Accuracy	Hysteresis	Scale
292-030-I	30mm	35μm	7μm	0-100

SERIES 225 INCH DIAL INDICATOR

Certificate

- MeetASME B89.1.10M-2001
- Supplied with limit hands and bezel clamp
- Lug back

Application

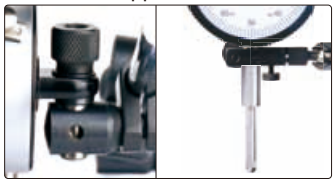



225-025-11

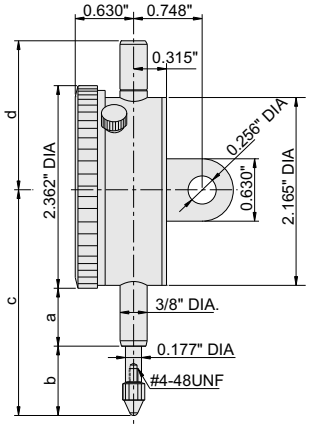

Graduation 0.001"

Code	Range	Dial reading	Range/rev	Accuracy		a	b	c	d
				First 2.5 rew	Overall				
225-006-11	0.25"	0-100	0.1"	±0.001"	±0.001"	0.787"	0.984"	2.953"	1.811"
225-012-11	0.5"	0-100	0.1"	±0.001"	±0.002"	0.787"	0.984"	2.953"	1.811"
225-025-11	1"	0-100	0.1"	±0.001"	±0.002"	0.787"	1.378"	3.346"	1.811"
225-050-11	2"	0-100	0.1"	±0.001"	±0.004"	1.969"	2.323"	5.472"	4.370"

Graduation 0.0005"

Code	Range	Dial reading	Range/rev	Accuracy		a	b	c	d
				First 2.5 rew	Overall				
225-006-05	0.25"	0-50	0.05"	±0.0005"	±0.0015"	0.787"	0.984"	2.953"	1.811"
225-012-05	0.5"	0-50	0.05"	±0.0005"	±0.0015"	0.787"	0.984"	2.953"	1.811"
225-025-05	1"	0-50	0.05"	±0.0005"	±0.002"	0.787"	1.378"	3.346"	1.811"
225-050-05	2"	0-50	0.05"	±0.0005"	±0.002"	1.969"	2.323"	5.472"	4.370"

With manufacturer inspection certificate

SERIES 261 DIAL TEST INDICATOR

Certificate Jeweled

- Jeweled bearing
- Double scale spacing
- Anti-magnetic copper body
- With two clamps: Ø4mm and Ø8mm

Application



Clamps **(included)**

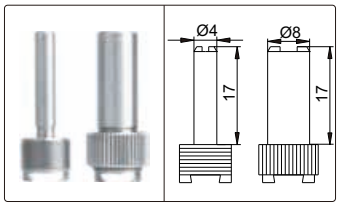



261-002-01

unit: mm

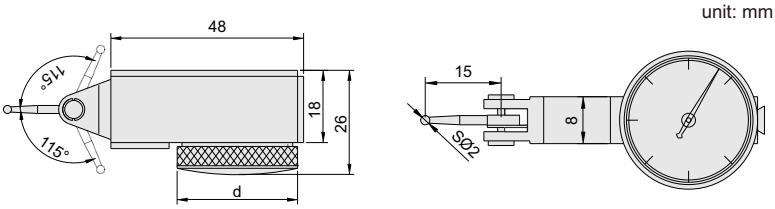

Code	Range	Bezel(d)	Graduation	Styli	Accuracy	Hysteresis	Scale	L
261-002-01	0.2mm	Ø30mm	0.002mm	carbide	6μm	2μm	0-100-0	15
261-002-02	0.2mm	Ø37.5mm	0.002mm	carbide	6μm	2μm	0-100-0	17

With manufacturer inspection certificate

SERIES 261 DIAL TEST INDICATOR

Certificate Jeweled

- Economic type
- Jeweled bearing
- Double scale spacing
- Anti-magnetic copper body
- With two clamps: Ø4mm and Ø8mm

Application



Clamps **(included)**

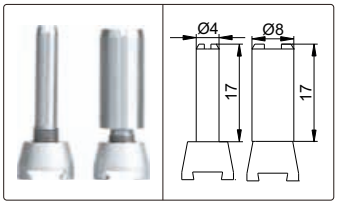



261-002-61P

unit: mm

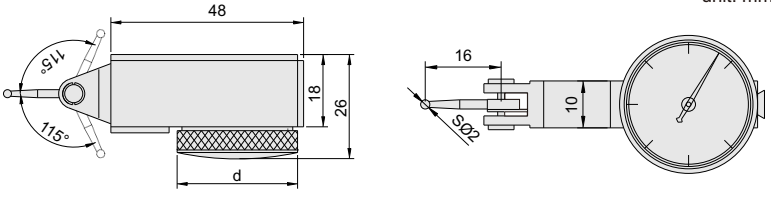

Code	Range	Bezel(d)	Graduation	Styli	Accuracy	Hysteresis	Scale
261-002-61P	0.2mm	Ø33mm	0.002mm	carbide	6μm	2μm	0-100-0
261-002-62P	0.2mm	Ø37.5mm	0.002mm	carbide	6μm	2μm	0-100-0

With manufacturer inspection certificate

SERIES 261 DIAL TEST INDICATOR

Certificate Jeweled

- Jeweled bearing
- Double scale spacing
- Anti-magnetic copper body
- With two clamps: Ø4mm and Ø8mm



261-008-12

Application



Clamps **(included)**

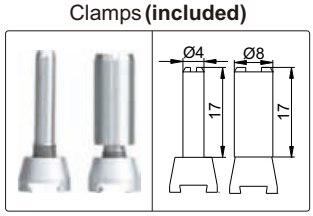

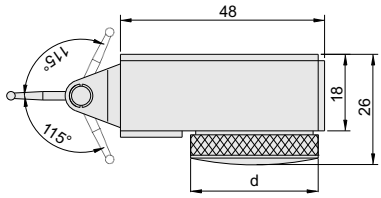

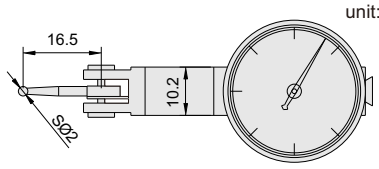

unit: mm

Code	Range	Bezel(d)	Graduation	Styli	Accuracy	Hysteresis	Scale
261-008-11	0.8mm	Ø30mm	0.01mm	carbide	13μm	3μm	0-40-0
261-008-12	0.8mm	Ø37.5mm	0.01mm	carbide	13μm	3μm	0-40-0

With manufacturer inspection certificate

SERIES 261 DIAL TEST INDICATOR

Certificate Jeweled

- Economic type
- Jeweled bearing
- Double scale spacing
- Anti-magnetic copper body
- With two clamps: Ø4mm and Ø8mm



261-008-62P

Application



Clamps **(included)**

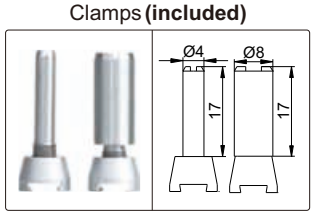

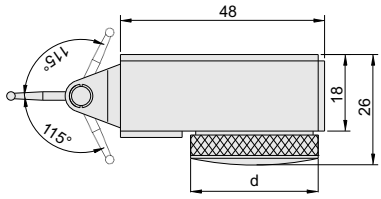

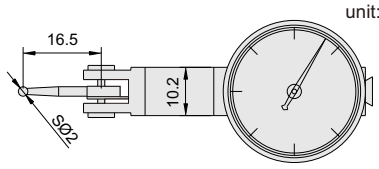

unit: mm

Code	Range	Bezel(d)	Graduation	Styli	Accuracy	Hysteresis	Scale
261-008-61P	0.8mm	Ø30mm	0.01mm	carbide	13μm	3μm	0-40-0
261-008-62P	0.8mm	Ø37.5mm	0.01mm	carbide	13μm	3μm	0-40-0

With manufacturer inspection certificate

261 PRECISION DIAL TEST INDICATOR

Certificate Jeweled

- Meet DIN2270
- Jeweled bearing
- Double scale spacing
- With two clamps: Ø6mm and Ø8mm



Clamps **(included)**

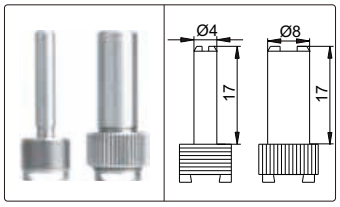

unit: mm

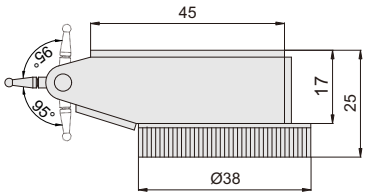

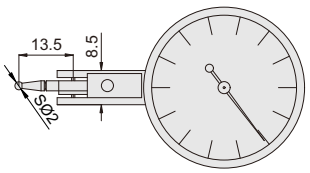

Code	Range	Bezel(d)	Graduation	Styli	Accuracy	Hysteresis	Scale
261-014-01	0.14mm	Ø38mm	0.001mm	ruby	4μm	2μm	0-70-0

With manufacturer inspection certificate

Application



SERIES 261 DIAL TEST INDICATOR

Certificate Jeweled

- Jeweled bearing
- Carbide contact point
- Two measuring directions
- Anti magnetic body
- Supplied with two clamps:5/32" DIA and 3/8" DIA



261-030-51

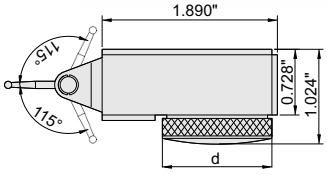

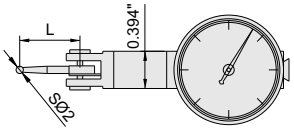

Graduation 0.001"

Code	Range	Accuracy	Dial reading	d	L
261-030-11	0.03"	±0.001"	0-15-0	1.181"DIA	0.50"
261-030-12	0.03"	±0.001"	0-15-0	1.457"DIA	0.50"

Application



Graduation 0.0001"

Code	Range	Accuracy	Dial reading	d	L
261-080-01	0.008"	±0.0001"	0-40-0	1.181"DIA	0.563"
261-080-02	0.008"	±0.0001"	0-40-0	1.457"DIA	0.563"

Clamp (included)

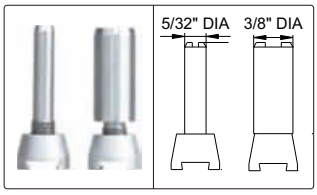

Graduation 0.0005"

Code	Range	Accuracy	Dial reading	d	L
261-030-51	0.03"	±0.0005"	0-15-0	1.181"DIA	0.50"
261-030-52	0.03"	±0.0005"	0-15-0	1.457"DIA	0.50"

With manufacturer inspection certificate

SERIES 263 LONG STYLI DIAL TEST INDICATOR

- Jeweled bearing
- Double scale spacing
- Anti-magnetic copper body
- With two clamps: Ø4mm and Ø8mm



263-008-11L

Application

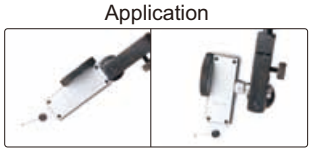

Clamps **(included)**

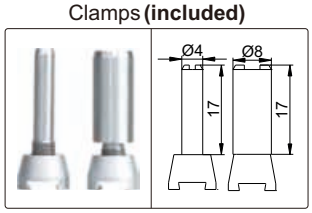

unit: mm

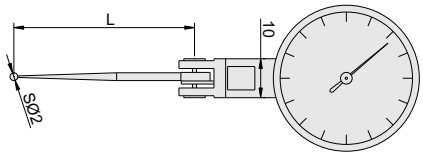

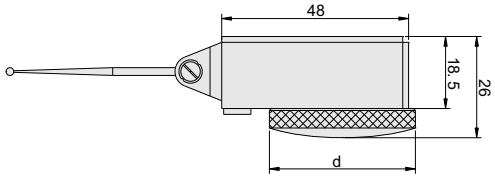

Code	Range	Bezel(d)	Graduation	Styli	Accuracy	Hysteresis	Scale	L
263-008-11	0.8mm	Ø37.5mm	0.01mm	carbide	13μm	3μm	0-40-0	30.5
263-008-11L	0.8mm	Ø37.5mm	0.01mm	ruby	13μm	9μm	0-40-0	46.4

With manufacturer inspection certificate

264 BACK PLUNGER TYPE DIAL TEST INDICATOR

- Jeweled bearing
- Carbide contact point
- Two measuring directions
- Anti magnetic body
- Supplied with two clamps: diameter Ø4mm and Ø8mm
- Optional accessory: styli



Application



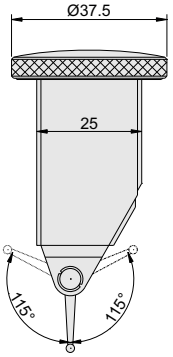

unit: mm

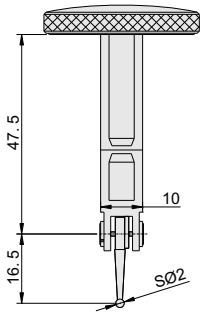

Clamps **(included)**

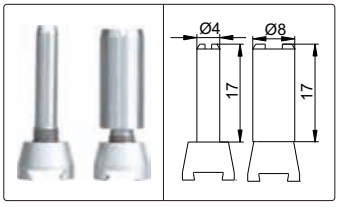

Code	Range	Graduation	Accuracy(fges)	Hysteresis(fu)	Dial Reading
264-008-11	0.8mm	0.01mm	13μm	3μm	0-40-0

With manufacturer inspection certificate

265 DIAL TEST INDICATOR

Certificate Jeweled

- Jeweled bearing
- Carbide contact point
- Two measuring directions
- Anti magnetic body
- Supplied with two clamps: diameter Ø4mm and Ø8mm
- Optional accessory: styli



Clamps **(included)**

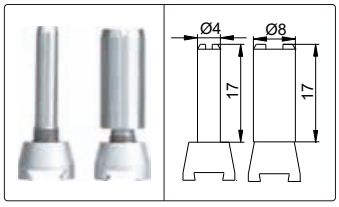

unit: mm

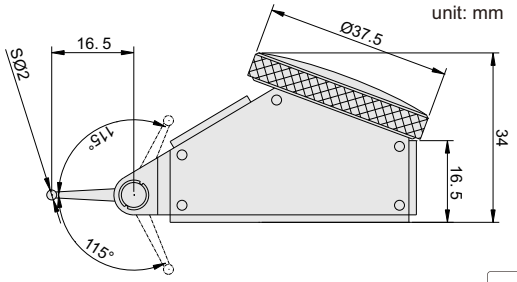

Application



Code	Range	Graduation	Accuracy(fges)	Hysteresis	Dial Reading
265-008-11	0.8mm	0.01mm	13μm	3μm	0-40-0

With manufacturer inspection certificate

266 LARGE RANGE DIAL TEST INDICATOR

Certificate Jeweled

- Jeweled bearing
- Carbide contact point
- Two measuring directions
- Anti magnetic body
- Supplied with two clamps: diameter Ø4mm and Ø8mm
- Optional accessory: styli



Clamps **(included)**

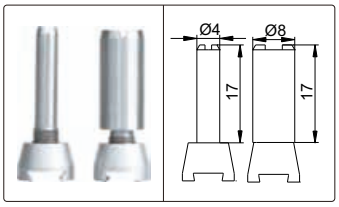

unit: mm

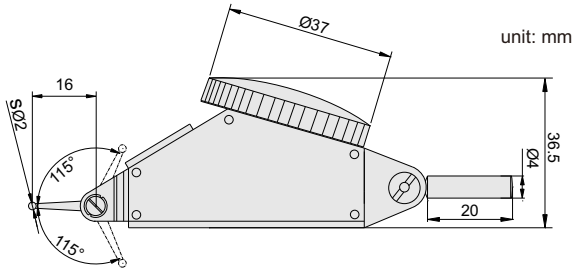

Code	Range	Graduation	Accuracy	Hysteresis	Dial reading
266-016-11	1.6mm	0.01mm	25μm	8μm	0-40-0

With manufacturer inspection certificate

SERIES 260 STYLI FOR DIAL TEST INDICATOR



260-002-02



260-010-01



260-009-01

unit: mm

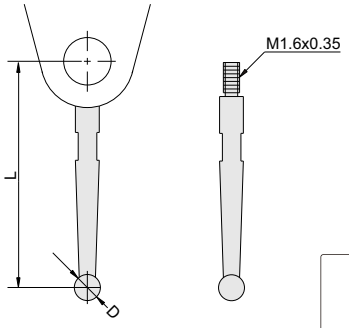

Code	For products	Tip material	D	L
260-001-01	261-008-11 261-008-12 261-008-61P 261-008-62P 264-008-11 265-008-11	steel	SØ1	16.5
260-002-02		carbide	SØ2	16.5
260-003-02		carbide	SØ3	16.5
260-010-01		ruby	SØ2	16.5
260-009-01	261-002-01	ruby	SØ2	15
260-009-02	261-002-02	ruby	SØ2	17
260-009-12	261-002-61P 261-002-62P	carbide	SØ2	16
260-010-02	263-008-11	carbide	SØ2	30.5
260-010-03	263-008-11L	ruby	SØ2	46.4
260-016-02	266-016-11	carbide	SØ2	16

Package



SERIES 261 CLAMP FOR DIAL TEST INDICATOR



261-008-CP4



261-008-CP8

type A



261-002-0X-CP4



261-002-0X-CP8

type B

unit: mm

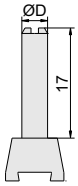

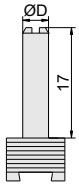

Code	ØD	Type	For products
261-008-CP4	Ø4	A	261-008-11, 261-008-12, 261-008-61P, 261-008-62P, 261-002-61P, 261-002-62P, 263-008-11, 263-008-11L, 264-008-11, 265-008-11, 266-016-11
261-008-CP6	Ø6	A	
261-008-CP8	Ø8	A	
261-002-0X-CP4	Ø4	B	261-002-01, 261-002-02, 261-014-01
261-002-0X-CP6	Ø6	B	
261-002-0X-CP8	Ø8	B	

SERIES 267 HOLDER FOR INDICATOR

- Use as holder for dial/digital indicators, dial test indicators and height gages



267-100-01

unit: mm

Application**(optional)**

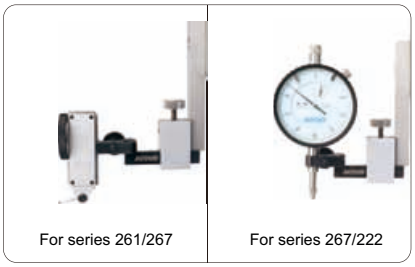

For series 261/267 | For series 267/222

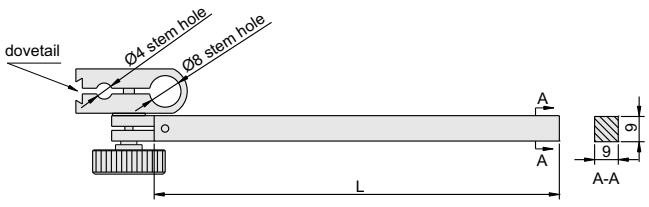

267-050-01 and **267-100-01**

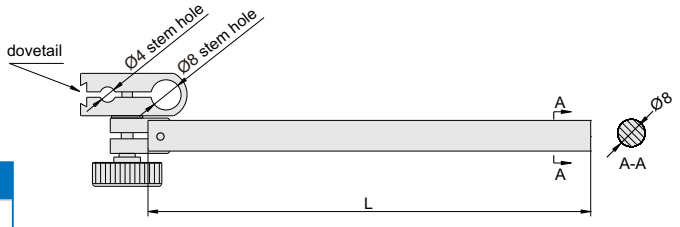

267-115-02

Code	Section size	Size(L)
267-050-01	9x9mm	50mm
267-100-01	9x9mm	100mm
267-115-02	Ø8mm	115mm

268 UNIVERSAL HOLDER FOR DIAL TEST INDICATOR

- Universal head



Application



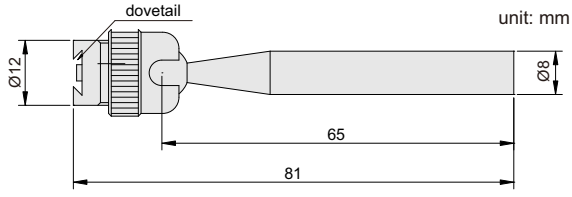

unit: mm

Package



Code	Section size
268-055-01	Ø8mm

269 DIAL TEST INDICATOR CENTERING HOLDER

- Center cylinders or holes on a machine tool

Application





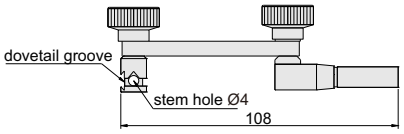

unit: mm

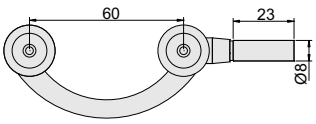

Code
269-060-01

273 SHAFT SLEEVE

- For dial indicators and probes with shaft diameter Ø8mm
- Made of stainless steel





unit: mm

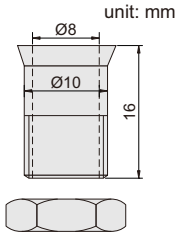

Application

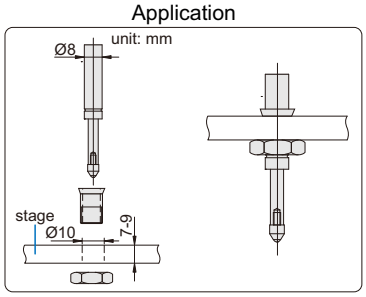

Code
273-001-01

274 DIAL TEST INDICATOR HOLDER

- Supplied with hex key

Application





unit: mm

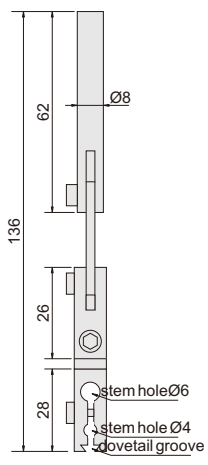

Code
274-130-01

SERIES 270 CONTACT POINTS

Ball Point



270-001-03

unit: mm

type A

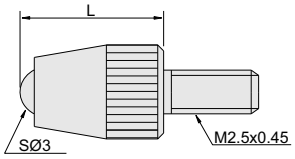

type B

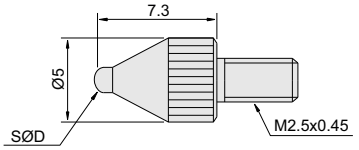

type A

Code	Material	L
270-001-01	carbide	7.3
270-001-02	ceramic	7.3
270-001-03	carbide	8.3
270-001-91	ruby	8.5
270-001-04	carbide	12.1
270-001-05	carbide	14
270-001-06	carbide	15
270-001-07	ceramic	15
270-001-08	carbide	17
270-001-09	carbide	19.3
270-001-10	carbide	20
270-001-11	ceramic	20
270-001-12	carbide	22
270-001-13	carbide	25
270-001-14	ceramic	25
270-001-15	carbide	30
270-001-16	ceramic	30

type B

Code	Material	SØD	L
270-001-21	steel	1	7.3
270-001-210	carbide	1	6
270-001-22	carbide	1.5	7.3
270-001-23	carbide	1.8	7.3
270-001-220	carbide	2	7
270-001-24	carbide	2.5	7.3
270-001-230	carbide	3	8
270-001-235	carbide	3.5	8.5
270-001-25	carbide	4	9
270-001-245	carbide	4.5	9.5
270-001-250	carbide	5	10
270-001-255	carbide	5.5	10
270-001-260	carbide	6	10.5
270-001-270	carbide	7	11.5

Package



Shell Type Point



270-002-02

Code	Material	L
270-002-01	steel	5
270-002-02	steel	10
270-002-03	steel	15
270-002-04	steel	20
270-002-05	steel	25
270-002-06	steel	30

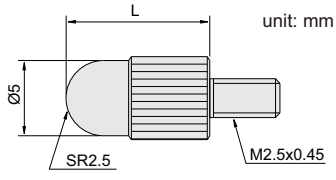

Package



Spherical Point



Code	Material
270-003-01	steel

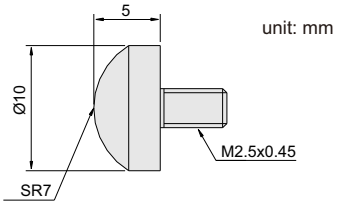

Conical Point

Package





270-004-02



270-004-10

unit: mm

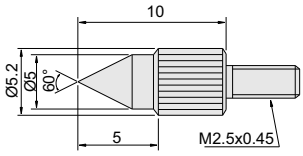

270-004-01

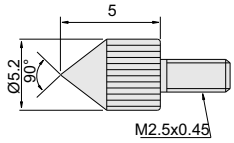

270-004-02

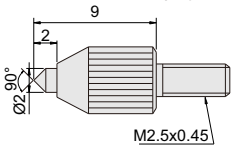

270-004-03

Code	Material
270-004-01	steel
270-004-02	steel
270-004-03	steel
270-004-04	steel

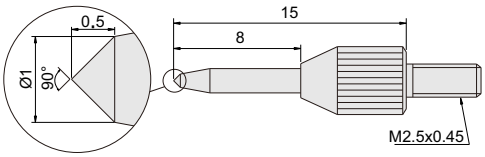

270-004-04

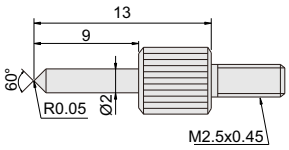

270-004-10

Code	Material
270-004-10	steel

Flat Point

type A

Code	Material	L
270-005-01	steel	8
270-005-02	steel	10

type B

Code	Material	ØD
270-005-11	steel	10
270-005-12	steel	15
270-005-13	steel	20
270-005-14	steel	25
270-005-15	steel	30

type C

Code	Material	ØD
270-010-16	ceramic	10

type D

Code	Material
270-005-21	carbide

type E

Code	Material	Ød	ØD
270-010-01	steel	6.5	7
270-010-02	steel	9.5	10.5



270-005-12



270-010-16

type A

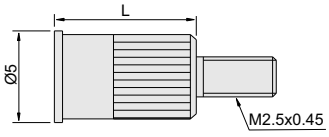

unit: mm

type D

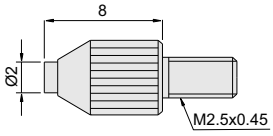

type B

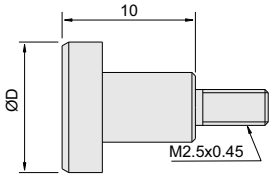

type E

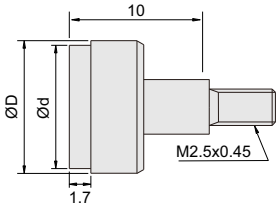

type C

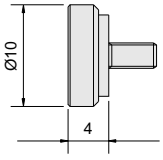

Needle Point



270-006-16

unit: mm

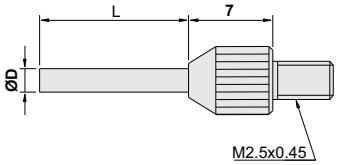

Code	Material	ØD	L
270-006-01	steel	0.45	3
270-006-02	steel	0.45	5
270-006-03	carbide	1	3
270-006-04	carbide	1	5
270-006-05	carbide	1	8
270-006-06	carbide	1	10
270-006-07	carbide	1	20
270-006-071	carbide	1	30
270-006-08	carbide	1	40
270-006-081	carbide	1	50
270-006-09	carbide	1.5	5
270-006-10	carbide	1.5	10
270-006-11	carbide	1.5	13
270-006-12	carbide	1.5	20
270-006-121	carbide	1.5	30
270-006-13	carbide	1.5	40
270-006-131	carbide	1.5	50
270-006-14	carbide	2	8
270-006-141	carbide	2	10
270-006-15	carbide	2	18
270-006-151	carbide	2	20
270-006-16	carbide	2	28
270-006-161	carbide	2	30
270-006-17	carbide	2	40
270-006-171	carbide	2	50

Code	Material	ØD	L
270-606-11	ceramic	1	10
270-606-12	ceramic	1	20
270-606-151	ceramic	1.5	10
270-606-152	ceramic	1.5	20
270-606-153	ceramic	1.5	30
270-606-154	ceramic	1.5	40
270-606-155	ceramic	1.5	50
270-606-21	ceramic	2	10
270-606-22	ceramic	2	20
270-606-23	ceramic	2	30
270-606-24	ceramic	2	40
270-606-25	ceramic	2	50

Package



Needle Point



270-006-53

unit: mm

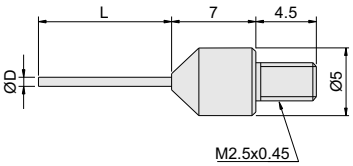

Code	Material	ØD	L
270-006-51	carbide	0.5	5
270-006-52	carbide	0.5	10
270-006-53	carbide	0.5	15
270-006-54	carbide	0.5	20
270-006-55	carbide	0.5	30
270-006-56	carbide	0.5	40
270-006-57	carbide	0.5	50
270-006-61	carbide	0.6	10
270-006-62	carbide	0.6	15
270-006-63	carbide	0.6	20
270-006-71	carbide	0.7	10
270-006-72	carbide	0.7	15

Code	Material	ØD	L
270-006-73	carbide	0.7	20
270-006-81	carbide	0.8	5
270-006-82	carbide	0.8	10
270-006-83	carbide	0.8	15
270-006-84	carbide	0.8	20
270-006-85	carbide	0.8	30
270-006-86	carbide	0.8	40
270-006-87	carbide	0.8	50
270-006-91	carbide	0.9	10
270-006-92	carbide	0.9	15
270-006-93	carbide	0.9	20

Package



Needle Point



270-006-22

unit: mm

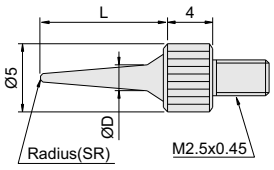

Code	Material	L	ØD	SR
270-006-217	steel	7	2	0.15
270-006-211	steel	13	2	0.15
270-006-212	steel	22	2	0.15
270-006-213	steel	30	2	0.15
270-006-214	steel	40	2	0.15
270-006-22	steel	13	2	0.2
270-006-225	steel	50	2	0.2
270-006-313	steel	13	2	0.3
270-006-317	steel	17	2	0.3
270-006-322	steel	22	2	0.3
270-006-330	steel	30	2	0.3
270-006-340	steel	40	2	0.3
270-006-21	steel	11	2	0.4
270-006-23	steel	21	2	0.4
270-006-24	steel	31	2	0.4
270-006-450	steel	50	2	0.4

Code	Material	L	ØD	SR
270-006-2013	carbide	13	2	0.2
270-006-2022	carbide	22	2	0.2
270-006-2030	carbide	30	2	0.2
270-006-2040	carbide	40	2	0.2
270-006-2050	carbide	50	2	0.2
270-006-3513	carbide	13	2	0.35
270-006-3522	carbide	22	2	0.35
270-006-3530	carbide	30	2	0.35
270-006-3540	carbide	40	2	0.35
270-006-3550	carbide	50	2	0.35

Package



Knife Edge Point

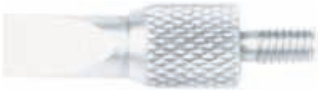

unit: mm

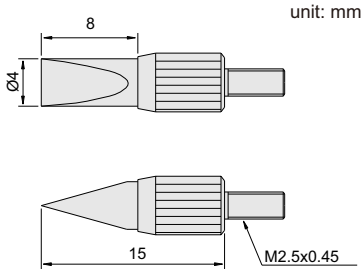

Code	Material
270-007-01	steel

Package



Blade Point



270-008-03

unit: mm

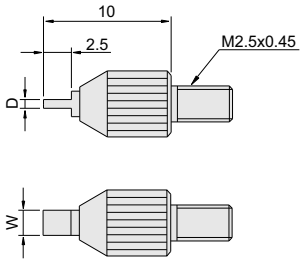

Code	Material	D	W
270-008-01	steel	0.4	2
270-008-02	steel	0.6	2
270-008-03	steel	1	4

Package



SERIES 270 CONTACT POINTS

Ball Point

Code	Material	SØD
270-011-01	carbide	1
270-011-02	carbide	1.5
270-011-03	carbide	2
270-011-04	carbide	2.5
270-011-05	carbide	3
270-011-06	carbide	3.5
270-011-07	carbide	4
270-011-08	carbide	4.5
270-011-09	carbide	5
270-011-10	carbide	5.5
270-011-11	carbide	6
270-011-12	carbide	6.5
270-011-14	carbide	7
270-011-16	carbide	8
270-011-18	carbide	9
270-011-20	carbide	10
270-011-24	carbide	12



270-011-08

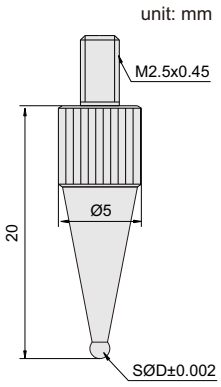

Package



Ball Point

Code	Material	SØD	L
270-012-11	carbide	1	10
270-012-12	carbide	1	20
270-012-13	carbide	1	30
270-012-14	carbide	1	40
270-012-15	carbide	1	50
270-012-151	carbide	1.5	10
270-012-152	carbide	1.5	20
270-012-153	carbide	1.5	30
270-012-154	carbide	1.5	40
270-012-155	carbide	1.5	50
270-012-21	carbide	2	10
270-012-22	carbide	2	20
270-012-23	carbide	2	30
270-012-24	carbide	2	40
270-012-25	carbide	2	50
270-012-251	carbide	2.5	10
270-012-252	carbide	2.5	20
270-012-253	carbide	2.5	30
270-012-254	carbide	2.5	40
270-012-255	carbide	2.5	50
270-012-31	carbide	3	10
270-012-32	carbide	3	20
270-012-33	carbide	3	30
270-012-34	carbide	3	40
270-012-35	carbide	3	50

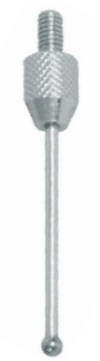

270-012-022

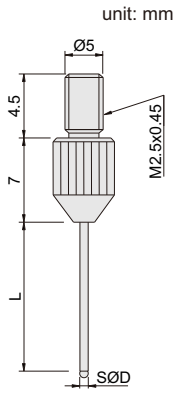

Code	Material	SØD	L
270-012-011	ruby	1	10
270-012-012	ruby	1	20
270-012-013	ruby	1	30
270-012-014	ruby	1	40
270-012-015	ruby	1	50
270-012-021	ruby	2	10
270-012-022	ruby	2	20
270-012-023	ruby	2	30
270-012-024	ruby	2	40
270-012-025	ruby	2	50

Package



SERIES 270 CONTACT POINTS

Flat Point



270-020-05

unit: mm

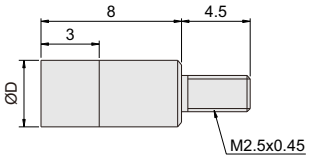

Code	Material ofmeasuring face	ØD
270-020-04	carbide	4
270-020-05	carbide	5
270-020-06	carbide	6
270-020-08	carbide	8
270-020-10	carbide	10

Package



270 ROLLER POINT



unit: mm

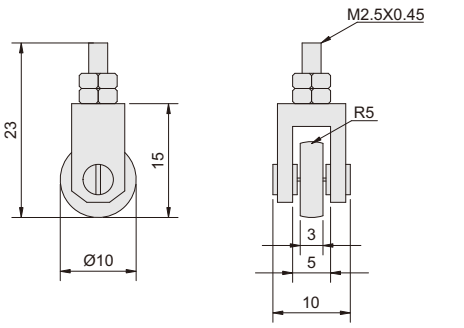

Code	Material of measuring face
270-009-01	steel

270 POINT SET



unit: mm

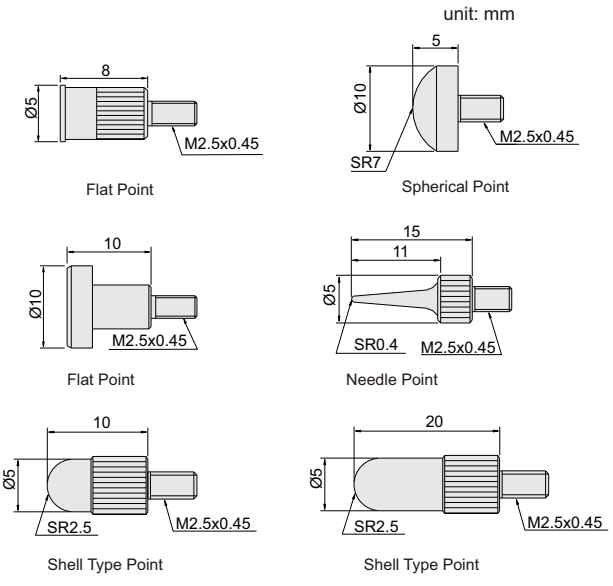

Code	Material of measuring face
270-100-06	steel

SERIES 270 EXTENSION ROD FOR CONTACT POINTS



270-000-15

unit: mm

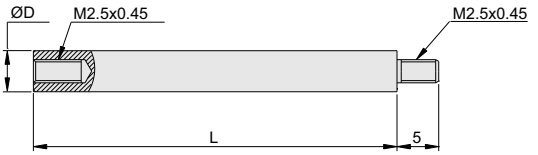

Code	Material	L	ØD
270-000-01	steel	10	4
270-000-02	steel	15	4
270-000-03	steel	20	4
270-000-04	steel	25	4
270-000-05	steel	30	4
270-000-06	steel	35	4
270-000-07	steel	40	4
270-000-08	steel	45	4
270-000-09	steel	50	4
270-000-10	steel	55	4

Code	Material	L	ØD
270-000-11	steel	60	4
270-000-12	steel	65	4
270-000-13	steel	70	4
270-000-14	steel	75	4
270-000-15	steel	80	4
270-000-16	steel	90	4
270-000-17	steel	100	4
270-000-18	steel	150	5
270-000-19	steel	200	5
270-000-20	steel	300	5

Package



SERIES 270 EXTENSION ROD FOR CONTACT POINTS

- For series 225 Inch indicator



270-000-04I

Package



Code	Material	L
270-000-01I	steel	1"
270-000-02I	steel	2"
270-000-03I	steel	3"
270-000-04I	steel	4"

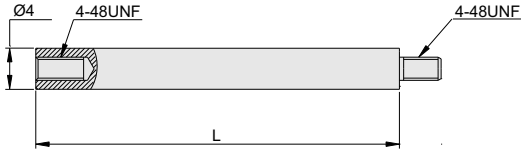

271 SPINDLE LIFT KNOB

- For dial/digital indicators with spindle diameter Ø4.5mm or Ø5mm

Code
271-045-01



SERIES 272 LUG AND FLAT BACK



272-000-01

unit: mm

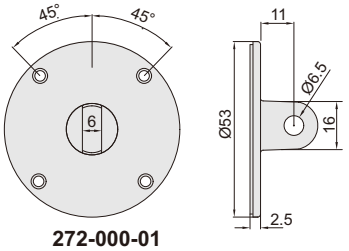

272-000-01

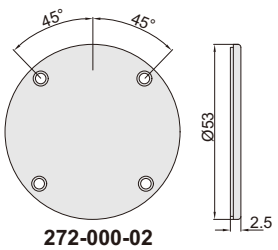

272-000-02

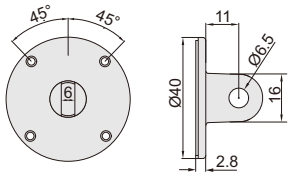

272-000-03

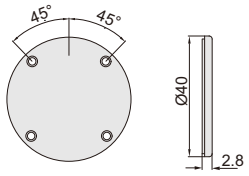

272-000-04

Code	Tpye	Material
272-000-01	lug	metal
272-000-02	flat	plastic
272-000-03	lug	metal
272-000-04	flat	plastic

272 MAGNETIC BACK



front

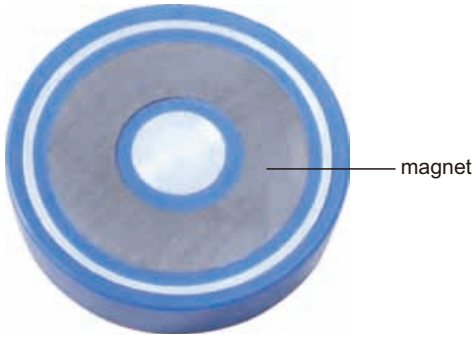

back

Application

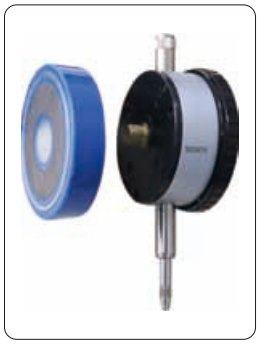

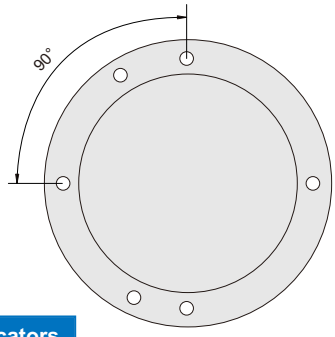

unit: mm

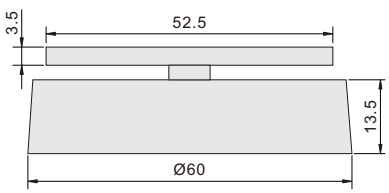

Code	For digital/dial indicators
272-020-11	series 222, 212

499 DIAL INDICATOR TESTER

- To calibrate dial indicators, test indicators and dial bore gauges
- Dimension: 270x210x205mm
- Weight: 11kg

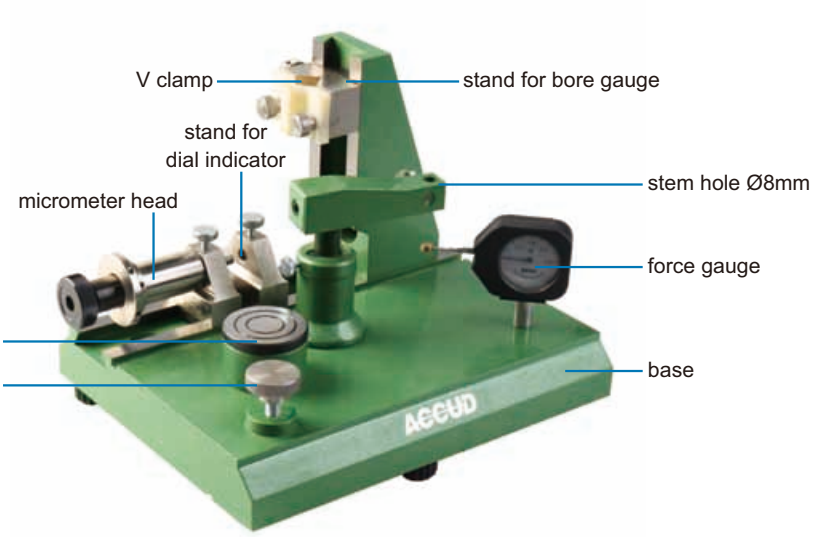


Inspect accuracy of dial indicators (range 0-25mm)


Inspect accuracy of dial bore gauges (range 6-450mm)

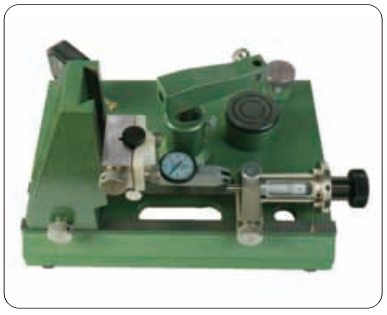
Inspect accuracy of test indicators



Check force of dial indicators



Check repeatability of dial indicators



Check the effect of lateral force on accuracy of dial indicators


Check the effect of lateral force on accuracy of test indicators

Micrometer head

Range	Sampling interval	Accuracy	Hysteresis
0-25mm	0.1mm	4μm(0-25mm), 3μm(any section 10mm), 2μm(any section 1mm)	1μm

Force gauge

Range	Graduation	Accuracy
0-1.6N	0.05N	±5%

Stage

Diameter	Flatness	Roughness
0-1.6N	1μm	0.05μm

Half round gauge block (included)

Dimension	Parallelism
10mm	1μm

Code
499-025-01


half round gauge block (included)

SERIES 281 MAGNETIC STAND

- For dial/digital indicators and dial test indicators
- V-block base

Application



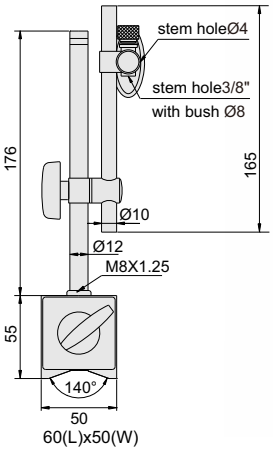

60(L)x50(W)

281-060-02

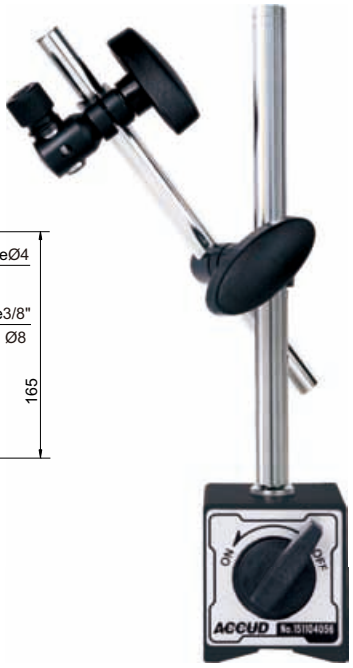

281-060-02



281-080-01

unit: mm

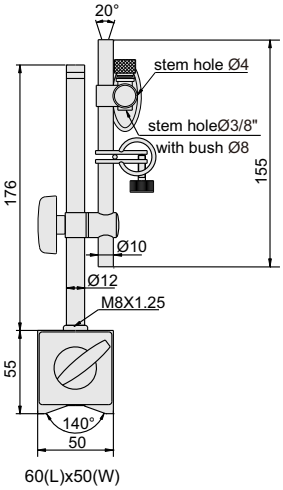

60(L)x50(W)

281-060-01

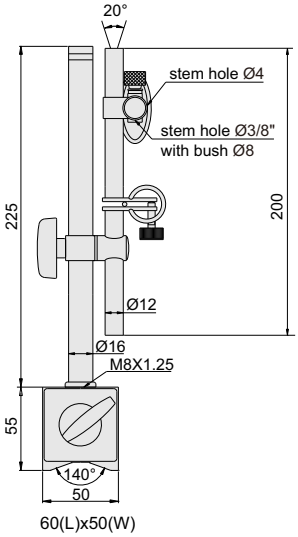

60(L)x50(W)

281-080-01

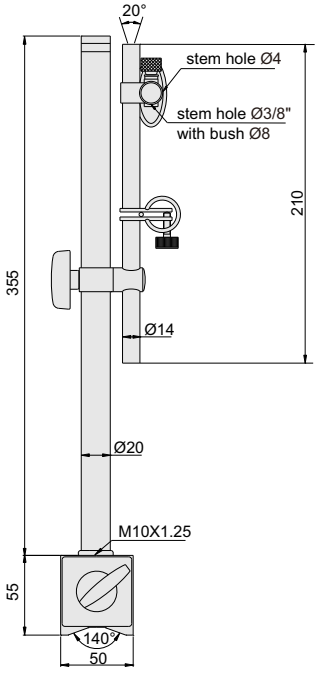

75(L)x50(W)

281-100-01

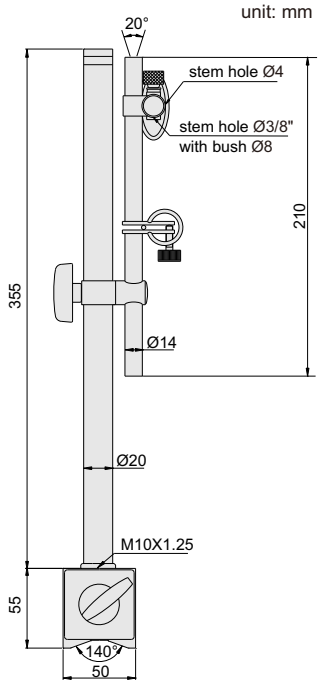

117(L)x50(W)

281-130-01

Code	Stem hole	Magnetic force	Fine adjustment
281-060-01	Ø8mm, Ø4mm, 3/8"	60kgf	With
281-060-02	Ø8mm, Ø4mm, 3/8"	60kgf	Without
281-080-01	Ø8mm, Ø4mm, 3/8"	80kgf	With
281-100-01	Ø8mm, Ø4mm, 3/8"	100kgf	With
281-130-01	Ø8mm, Ø4mm, 3/8"	130kgf	With

SERIES 282 UNIVERSAL MAGNETIC STAND

- For dial/digital indicators and dial test indicators
- Stem hole: Ø8mm
- With find adjustment and dovetail
- V-block base



282-080-01

Application



unit: mm

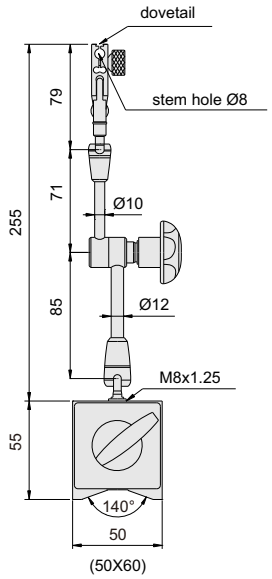

282-080-01

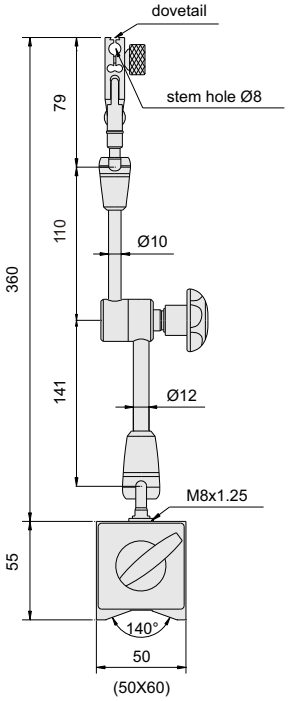

282-080-02

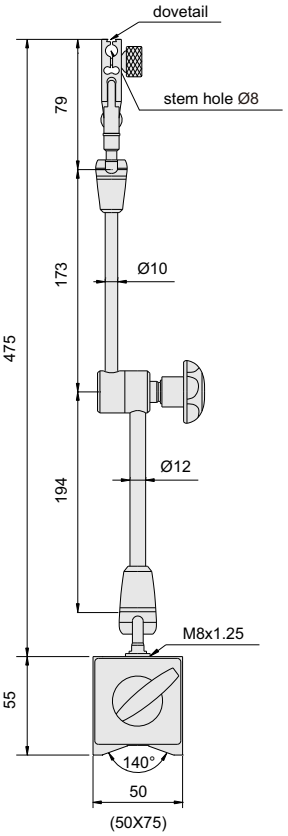

282-100-01

Code	Magnetic force
282-080-01	80kgf
282-080-02	80kgf
282-100-01	100kgf

283 UNIVERSAL MAGNETIC STAND

- Economic type
- For dial/digital indicators and dial test indicators
- Stem hole: Ø8mm
- With find adjustment and dovetail
- V-block base

Application





unit: mm

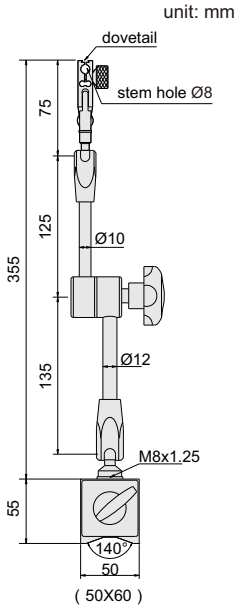

Code	Magnetic force
283-080-01	80kgf

SERIES 279 UNIVERSAL MAGNETIC STAND

- For dial/digital indicators and dial test indicators
- Aluminum arm
- With fine adjustment and dovetail
- V-block base

Application





279-080-01

unit: mm

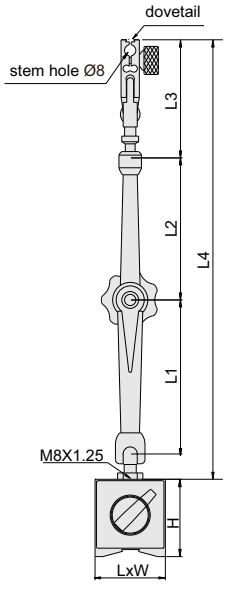

Code	Magnetic force	Base (LxWxH)	L1	L2	L3	L4
279-030-01	30kgf	35x30x35	56	51	76	205
279-080-01	80kgf	60x50x55	110	101	76	310
279-100-01	100kgf	73x50x55	147	130	76	375

SERIES 277 HYDRAULIC UNIVERSAL MAGNETIC STAND

- For dial/digital indicators and dial test indicators
- With fine adjustment and dovetail
- V-block base
- Magnetic switch made of metal

Application





277-080-01

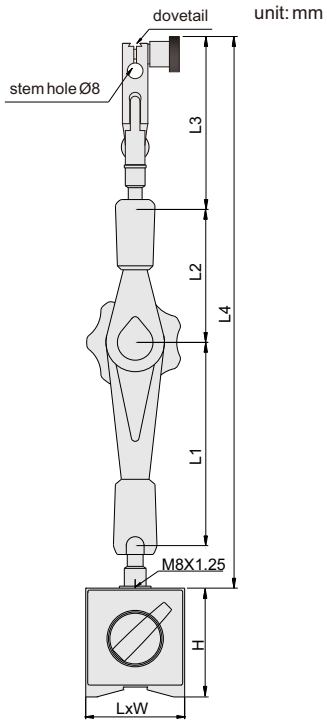

Code	Magnetic force	Base(LxWxH)	L1	L2	L3	L4
277-080-01	80kgf	60x50x55	65	55	79	215
277-080-02	80kgf	60x50x55	125	90	79	315
277-100-01	100kgf	75x50x55	160	125	79	390

SERIES 278 UNIVERSAL MAGNETIC STAND

- For dial/digital indicators and dial test indicators
- Super strong arm
- With fine adjustment and dovetail
- V-block base

Application





278-080-01

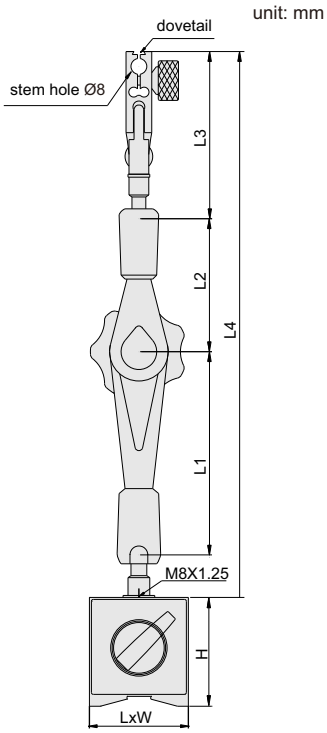

Code	Magnetic force	Base (LxWxH)	L1	L2	L3	L4
278-050-01	50kgf	40x40x40	62	52	79	210
278-080-01	80kgf	60x50x55	103	81	79	285
278-100-01	100kgf	73x50x55	145	95	81	348

SERIES 276 LARGE LOCKING FORCE MAGNETIC STAND

- For digital/dial indicators and dial test indicators

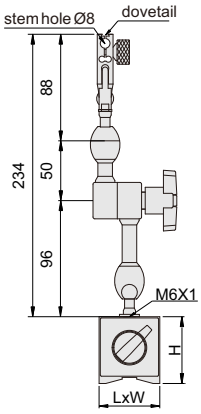

276-050-01



276-050-01



276-100-01

unit: mm

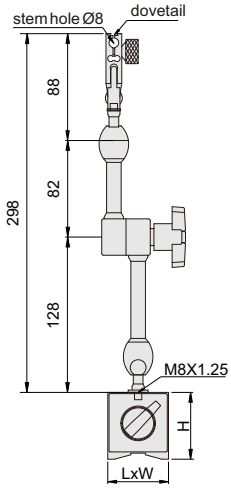

276-080-01

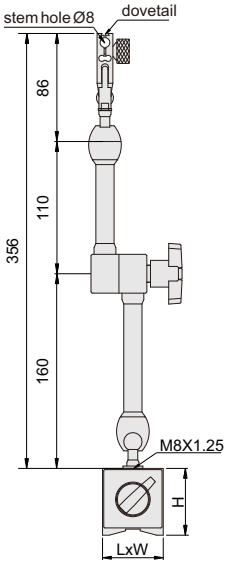

276-080-02

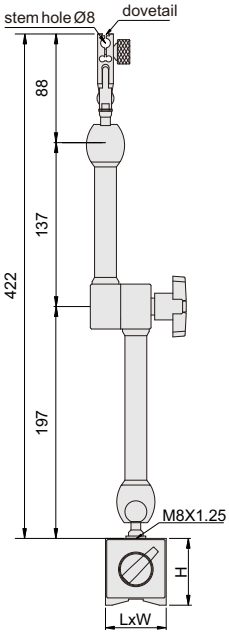

276-100-01

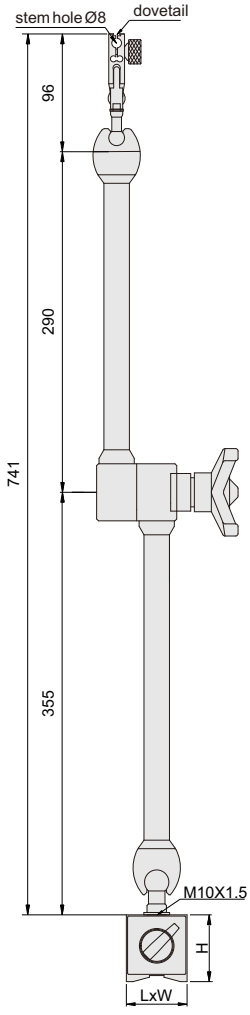

276-130-01

Code	Magnetic force	Base (LxWxH)
276-050-01	50kgf	40x40x40
276-080-01	80kgf	60x50x55
276-080-02	80kgf	60x50x55
276-100-01	100kgf	73x50x55
276-130-01	130kgf	117x50x55

Application



288 MINI MAGNETIC STAND

- For dial test indicators

Application





unit: mm

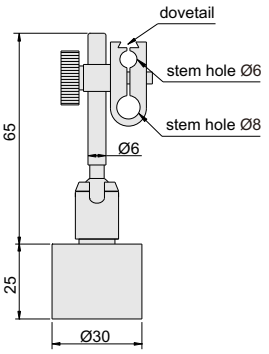

Code	Magnetic force	Stem hole
288-010-01	10kgf	Ø8mm, Ø6mm

286 MINI MAGNETIC STAND

- For dial test indicators
- Stem hole: Ø8mm
- With find adjustment and dovetail
- V-block base

Application





unit: mm

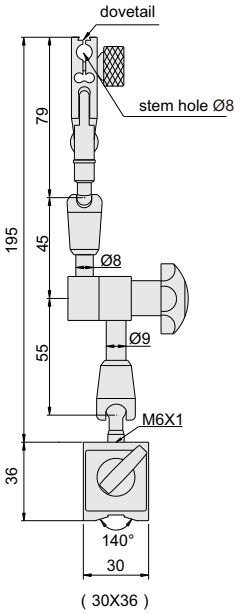

Code	Magnetic force	Stem hole
286-040-01	40kgf	Ø8mm

285 FLEX ARM MAGNETIC STAND

- For dial test indicators

Application





unit: mm

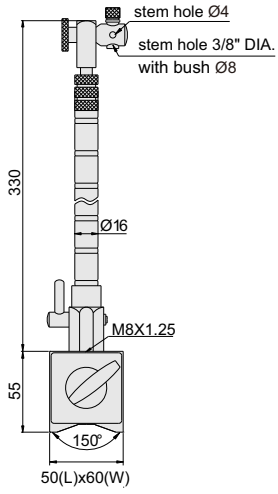

Code	Magnetic force	Applicable holding stem
285-080-01	80kgf	Ø8mm, Ø4mm, 3/8" DIA.

284 VACUUM STAND

- To be used on granite plates
- For digital/dial indicators and dial test indicators

Application





unit: mm

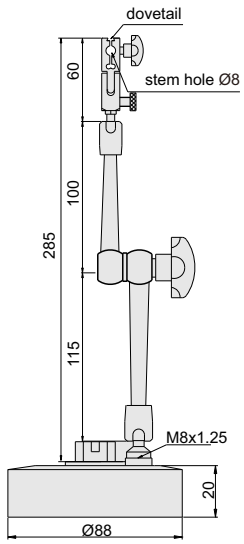

Code	Applicable holding stem	Remark
284-080-01	Ø8mm	with fine adjustment and dovetail groove

287 UNIVERSAL STAND

- For dial/digital indicators and dial test indicators

Application





unit: mm

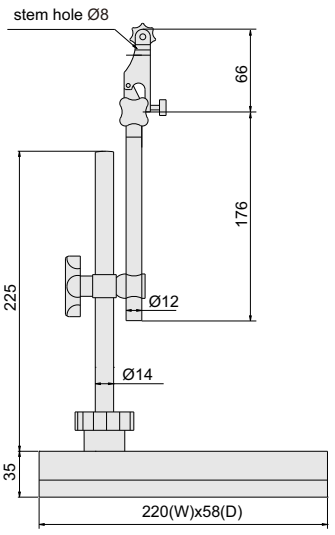

Code	Applicable holding stem	Remark
287-001-01	Ø8mm	with fine adjustment

SERIES 289 INDICATOR STAND WITH GRANITE BASE

- Holder vertical travel: 150mm
- Fine adjustment range: 2mm

Application





289-008-01

unit: mm

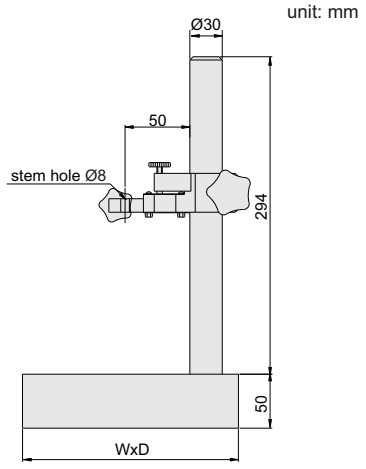

Code	Stem hole	Base flatness	Base size (WxD)
289-008-01	Ø8mm	3.2μm	200x150mm
289-012-01	Ø8mm	3.2μm	300x200mm

SERIES 289 GRANITE DIAL INDICATOR STAND

- Vertical travel of holder: 170mm
- Supplied with dust cover

Application





289-008-61P

unit: mm

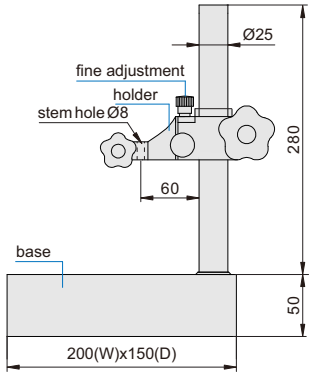



289-008-62P

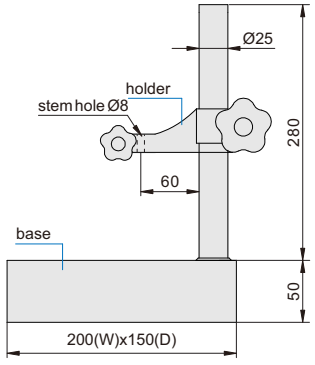



289-008-63P

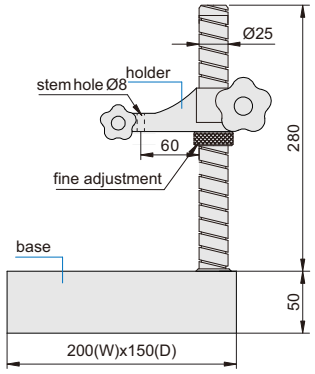

Code	Stem hole	Base flatness	Remark
289-008-61P	Ø8mm	2.5μm	with fine adjustment, fine adjustment range 2mm
289-008-62P	Ø8mm	2.5μm	without fine adjustment
289-008-63P	Ø8mm	2.5μm	with fine adjustment

SERIES 675 GRANITE DIAL INDICATOR STAND

- Vertical travel of holder: 250mm
- Fine adjustment range: entire stroke

Application





675-300-11

unit: mm

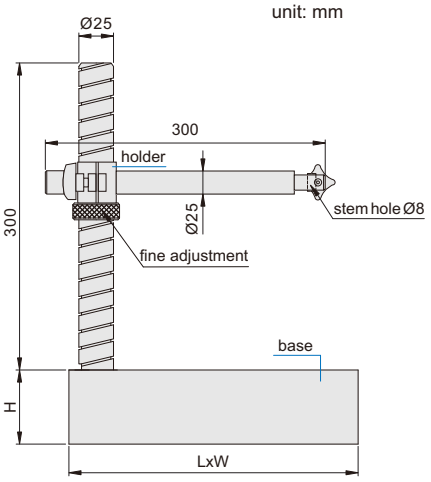

Code	Stem hole	Base flatness	L	W	H
675-300-11	Ø8mm	2.8μm	300	300	75
675-400-11	Ø8mm	3μm	400	300	100

SERIES 290 INDICATOR STAND WITH CERAMIC BASE

- Working table is made of ceramic
- Holder vertical travel: 150mm



290-080-01



290-100-01

unit: mm

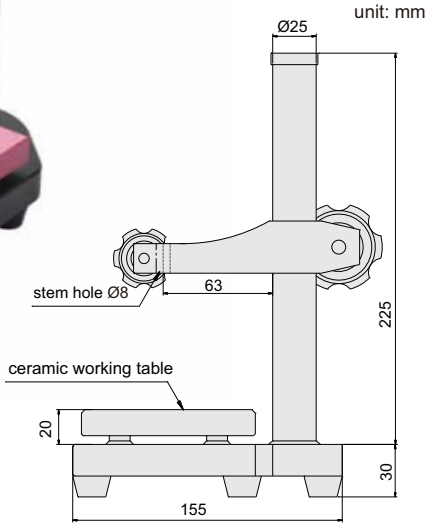

Code	Stem hole	Ceramic flatness	Ceramic size
290-080-01	Ø8mm	1.5μm	Ø80mm

Code	Stem hole	Ceramic flatness	Ceramic size
290-100-01	Ø8mm	1.5μm	100x100mm

SERIES 294 INDICATOR STAND

- Working table is made of steel
- Holder vertical travel: 100mm
- With fine adjustment: ±1.5mm
- Working table surface hardness is 60±2HRC



294-080-12



294-060-11

unit: mm

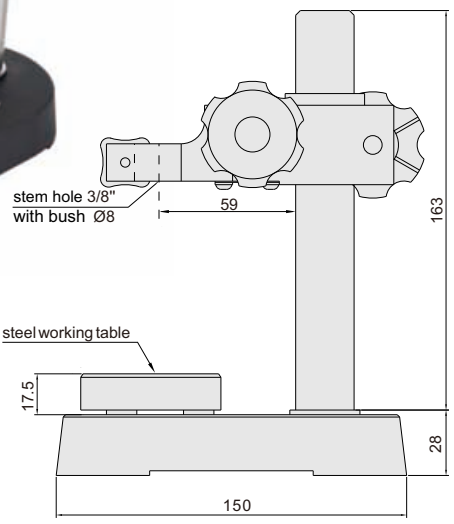

Code	Working table flatness	Working table size
294-060-11	1.5μm	Ø60mm

Code	Working table flatness	Working table size
294-080-12	1.5μm	80x80mm

SERIES 660 CONCENTRICITY GAUGE

- Optional accessories: dial test indicator (code: 261-002-01 or 261-002-02) and Mini magnetic stand (code: 286-040-01)

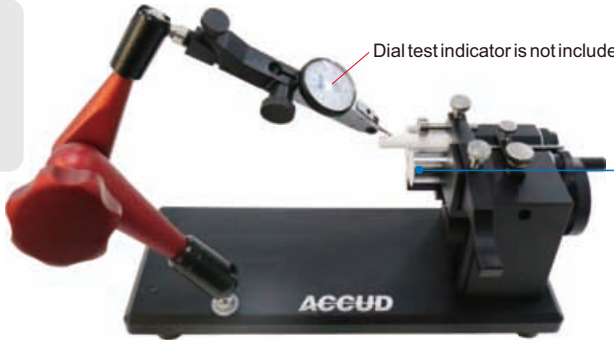

660-001-01

unit: mm

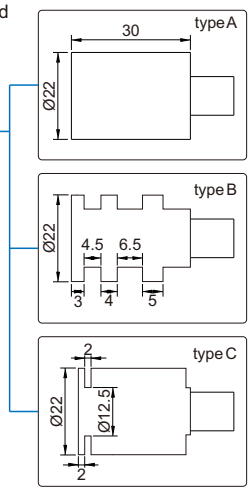

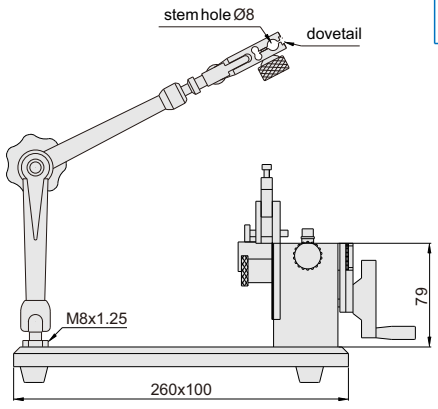

Code	Applicable diameter	Accuracy	Type
660-001-01	Ø3-35mm	0.002mm	A
660-001-02	Ø1-25mm	0.002mm	B
660-001-03	Ø1-25mm	0.002mm	C

SERIES 661 QUICK POSITIONING CONCENTRICITY GAUGE

- Quick positioning, suitable for mass measurement
- Optional accessories: dial test indicator (code: 261-002-01 or 261-002-02)

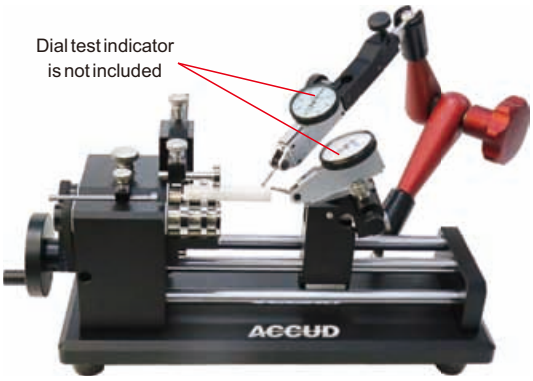

661-002-01

unit: mm

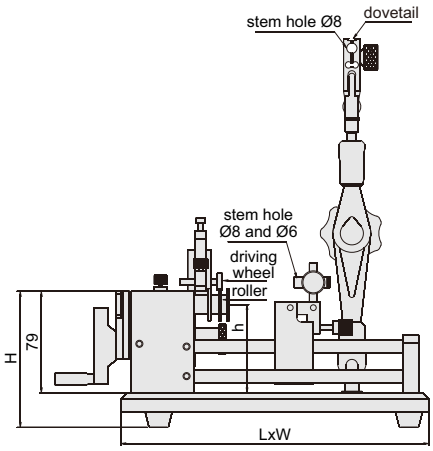

661-002-01

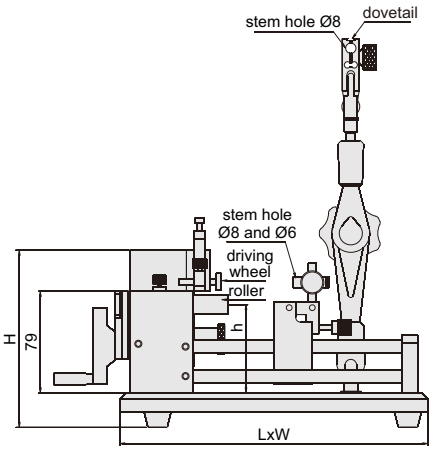

661-004-01

Code	Diameter range	Workpiece length	Accuracy	Center height (h)	LxWxH
661-002-01	Ø1-35mm	15-100mm	2μm	70mm	260x100x130
661-004-01	Ø20-110mm	15-200mm	2μm	70mm	340x150x145

662 CONCENTRICITY GAUGE



- Double guide
- Holding height can be adjusted

unit: mm

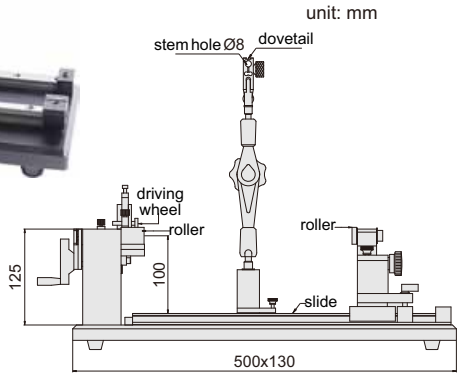

Code	Applicable diameter	Workpiece length	Accuracy
662-300-01	Ø3-40mm	300mm	2μm

SERIES 662 BENCH CENTER

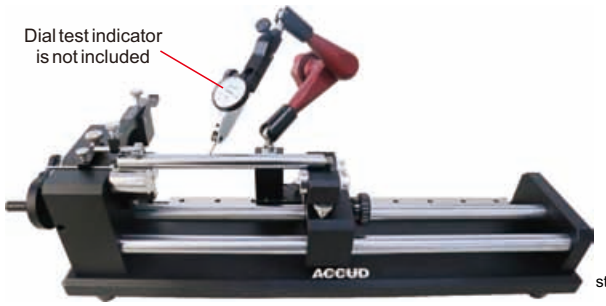

662-300-11

unit: mm

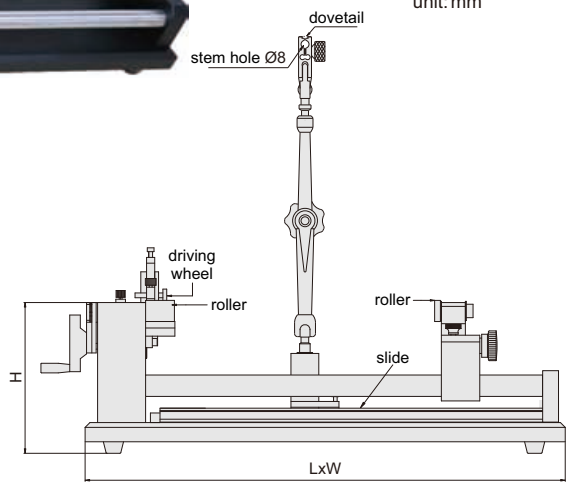

- Double guide
- Quick positioning, suitable for mass measurement
- Supplied with standard rod to verify accuracy
- Optional accessories: dial test indicator
  (code: 261-002-01 or 261-002-02)

Code	Applicable diameter	Workpiece length	Accuracy	LxWxH
662-300-11	Ø3-40mm	300mm	2μm	500x130x135
662-600-11	Ø3-40mm	600mm	2μm	760x120x150

SERIES 663 BENCH CENTER

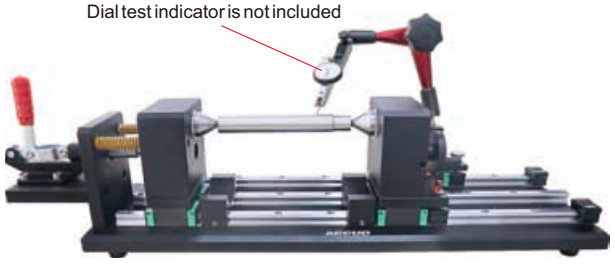

663-012-02

unit: mm

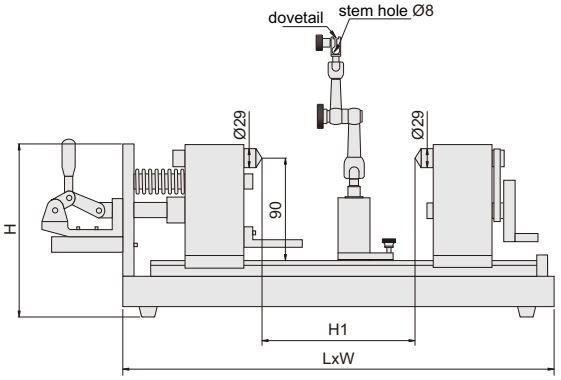

- Double guide
- Quick positioning, suitable for mass measurement
- Suitable for cylinders with outside diameter Ø3-180mm
  or inside diameter Ø1-40mm
- Supplied with standard rod to verify accuracy
- Optional accessories: dial test indicator
  (code: 261-002-01 or 261-002-02)

Code	Inside diameter	Outside diameter	Workpiece length (H1)	Accuracy	Center height (h)	LxWxH
663-006-02	Ø1-40mm	Ø3-180mm	150mm	2μm	90mm	390x150x150
663-012-02	Ø1-40mm	Ø3-180mm	300mm	2μm	90mm	600x180x150

SERIES 410 DIGITAL INTERNAL CALIPER GAUGE

CR2032



410-055-11

unit: mm

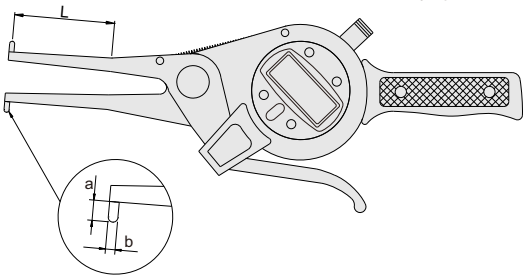



410-035-11L

- Measure the internal dimension
- Resolution: 0.01mm/0.0005"

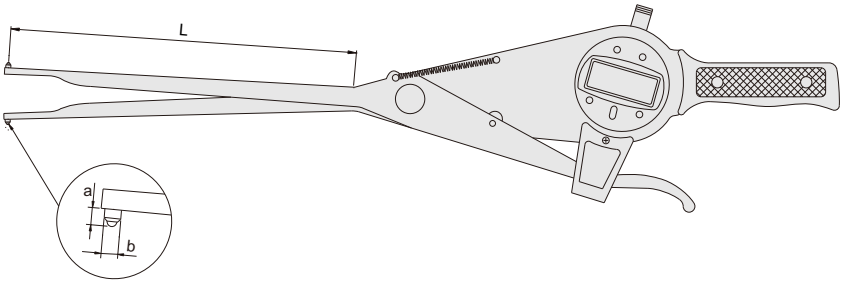

Code	Range	Accuracy	a	b	L
410-035-11	15-35mm/0.6-1.4"	±0.04mm	3	Ø3	50
410-035-11L	15-35mm/0.6-1.4"	±0.04mm	3	Ø3	200
410-055-11	35-55mm/1.4-2.2"	±0.04mm	6	Ø3	80
410-055-11L	35-55mm/1.4-2.2"	±0.04mm	6	Ø3	250
410-075-11	55-75mm/2.2-3"	±0.04mm	8	Ø3	90
410-075-11L	55-75mm/2.2-3"	±0.04mm	8	Ø3	250
410-095-11	75-95mm/3-3.8"	±0.04mm	8	Ø3	100
410-095-11L	75-95mm/3-3.8"	±0.04mm	8	Ø3	250
410-115-11	95-115mm/3.8-4.6"	±0.04mm	10	Ø3.2	120
410-115-11L	95-115mm/3.8-4.6"	±0.04mm	10	Ø3.2	250
410-135-11	115-135mm/4.6-5.4"	±0.04mm	10	Ø3.2	120
410-135-11L	115-135mm/4.6-5.4"	±0.04mm	10	Ø3.2	250
410-155-11	135-155mm/5.32-6.12"	±0.04mm	10	Ø3.2	150
410-175-11	155-175mm/6.12-6.92"	±0.04mm	10	Ø3.2	150
410-195-11	175-195mm/6.92-7.72"	±0.04mm	10	Ø3.2	150
410-215-11	195-215mm/7.72-8.52"	±0.04mm	10	Ø3.2	160
410-235-11	215-235mm/8.52-9.32"	±0.04mm	10	Ø3.2	160

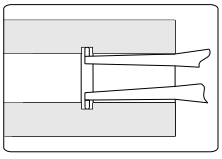

Setting ring**(optional)**



SERIES 411 INTERNAL DIAL CALIPER GAUGE



411-035-11

unit: mm

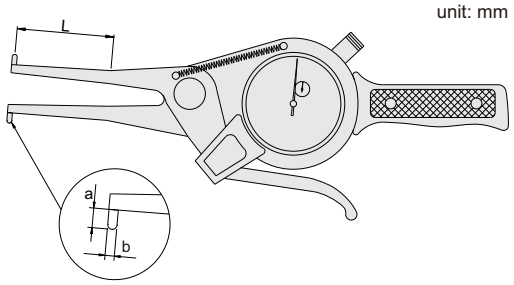



411-035-11L

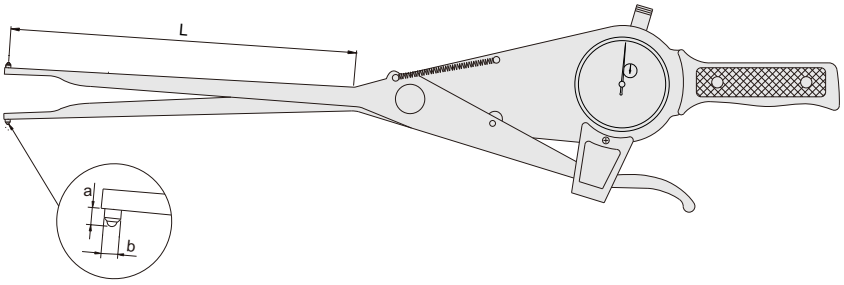

- Measure the internal dimension
- Graduation: 0.01mm

Code	Range	Accuracy	a	b	L
411-035-11	15-35mm	±0.04mm	3	Ø3	50
411-035-11L	15-35mm	±0.04mm	3	Ø3	200
411-055-11	35-55mm	±0.04mm	6	Ø3	80
411-055-11L	35-55mm	±0.04mm	6	Ø3	250
411-075-11	55-75mm	±0.04mm	8	Ø3	90
411-075-11L	55-75mm	±0.04mm	8	Ø3	250
411-095-11	75-95mm	±0.04mm	8	Ø3	100
411-095-11L	75-95mm	±0.04mm	8	Ø3	250
411-115-11	95-115mm	±0.04mm	10	Ø3.2	120
411-115-11L	95-115mm	±0.04mm	10	Ø3	300
411-135-11	115-135mm	±0.04mm	10	Ø3.2	120
411-155-11	135-155mm	±0.04mm	10	Ø3.4	190
411-175-11	155-175mm	±0.04mm	10	Ø3.4	190
411-195-11	175-195mm	±0.04mm	10	Ø3.4	190
411-215-11	195-215mm	±0.04mm	10	Ø3.4	190

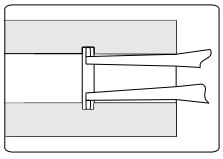

Setting ring**(optional)**



SERIES 420 DIGITAL EXTERNAL CALIPER GAUGE

CR2032

- Measure the external dimension
- Resolution: 0.01mm/0.0005"



420-020-11

unit: mm

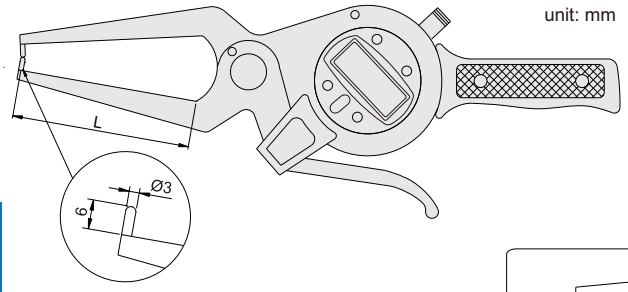

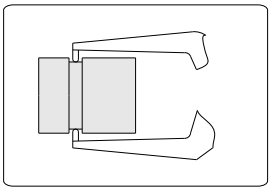

Code	Range	Accuracy	L
420-020-11	0-20mm/0-0.8"	±0.04mm	60
420-040-11	20-40mm/0.8-1.6"	±0.04mm	60
420-060-11	40-60mm/1.6-2.4"	±0.04mm	55
420-080-11	60-80mm/2.4-3.2"	±0.04mm	55
420-100-11	80-100mm/3.2-4"	±0.04mm	55

SERIES 421 EXTERNAL DIAL CALIPER GAUGE

- Measure the external dimension
- Graduation: 0.01mm



421-020-11

unit: mm

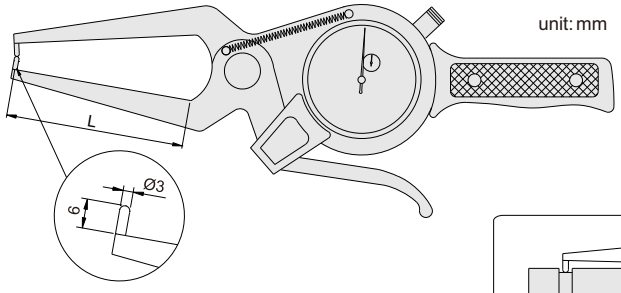

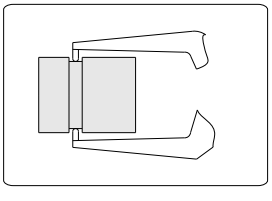

Code	Range	Accuracy	L
421-020-11	0-20mm	±0.04mm	60
421-040-11	20-40mm	±0.04mm	60
421-060-11	40-60mm	±0.04mm	55
421-080-11	60-80mm	±0.04mm	55
421-100-11	80-100mm	±0.04mm	55

SERIES 412 DIGITAL INTERNAL CALIPER GAUGE

CR2032

- Resolution:0.005mm/0.0002"
- Reading in digit and analog
- Display can be rotated by 170°
- Button function: tolerance Go and No-Go display, data preset,max./min. measurement, data holding,inch/metric conversion,absolute/incremental measurement
- Automatic power off



unit: mm

412-015-11

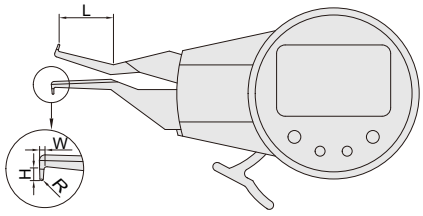

Code	Range	Repeatability	Accuracy	L	H	W	R
412-015-11	5-15mm	0.01mm	±0.03mm	20	2	1.5	R0.3
412-025-11	5-25mm	0.01mm	±0.03mm	35	1.5	1.0	R0.3
412-030-11	10-30mm	0.01mm	±0.03mm	55	5.5	2.5	R0.5
412-040-11	20-40mm	0.01mm	±0.03mm	80	6.0	3.0	R0.5
412-050-11	30-50mm	0.01mm	±0.03mm	80	8.0	3.0	R0.5
412-060-11	40-60mm	0.01mm	±0.03mm	80	8.0	3.0	R0.5



display can be rotated by 170°

SERIES 413 INTERNAL DIAL CALIPER GAUGE



unit: mm

413-025-11

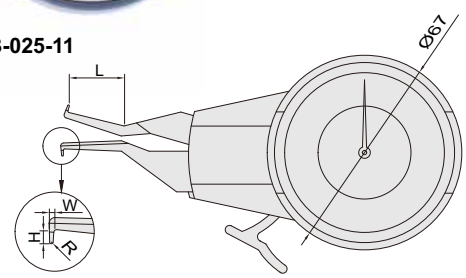

Code	Range	Graduation	Accuracy	L	H	W	R
413-015-11	5-15mm	0.01mm	±0.03mm	20	2	1.5	R0.3
413-025-11	5-25mm	0.01mm	±0.03mm	35	1.5	1.0	R0.3
413-030-11	10-30mm	0.01mm	±0.03mm	55	5.5	2.5	R0.5
413-040-11	20-40mm	0.01mm	±0.03mm	80	6.0	3.0	R0.5
413-050-11	30-50mm	0.01mm	±0.03mm	80	8.0	3.0	R0.5
413-060-11	40-60mm	0.01mm	±0.03mm	80	8.0	3.0	R0.5

SERIES 422 DIGITAL EXTERNAL CALIPER GAUGE

CR2032

- Resolution:0.005mm/0.0002"
- Reading in digit and analog
- Display can be rotated by 170°
- Button function: tolerance Go and No-Go display, data preset,max./min. measurement, data holding,inch/metric conversion,absolute/incremental measurement
- Automatic power off



422-020-11

unit: mm

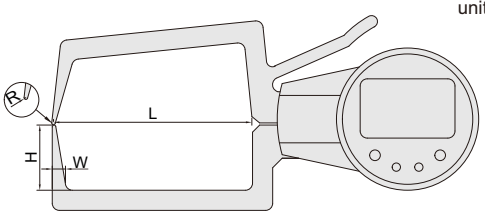

Code	Range	Repeatability	Accuracy	L	H	W	R
422-020-11	0-20mm	0.01mm	±0.03mm	80	25	6.5	R0.5
422-030-11	10-30mm	0.01mm	±0.03mm	80	25	6.5	R0.5
422-040-11	20-40mm	0.01mm	±0.03mm	80	25	6.5	R0.5
422-050-11	30-50mm	0.01mm	±0.03mm	80	25	6.5	R0.5
422-060-11	40-60mm	0.01mm	±0.03mm	80	25	6.5	R0.5



display can be rotated by 170°

SERIES 423 EXTERNAL DIAL CALIPER GAUGE



423-020-11

unit: mm

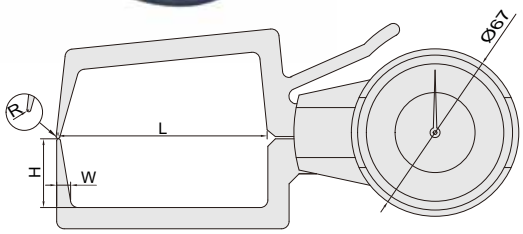

Code	Range	Graduation	Accuracy	L	H	W	R
423-020-11	0-20mm	0.01mm	±0.03mm	80	25	6.5	R0.5
423-030-11	10-30mm	0.01mm	±0.03mm	80	25	6.5	R0.5
423-040-11	20-40mm	0.01mm	±0.03mm	80	25	6.5	R0.5
423-050-11	30-50mm	0.01mm	±0.03mm	80	25	6.5	R0.5
423-060-11	40-60mm	0.01mm	±0.03mm	80	25	6.5	R0.5

SERIES 428 EXTERNAL DIAL CALIPER GAUGE

- Measure the external dimension



428-050-05

unit: mm

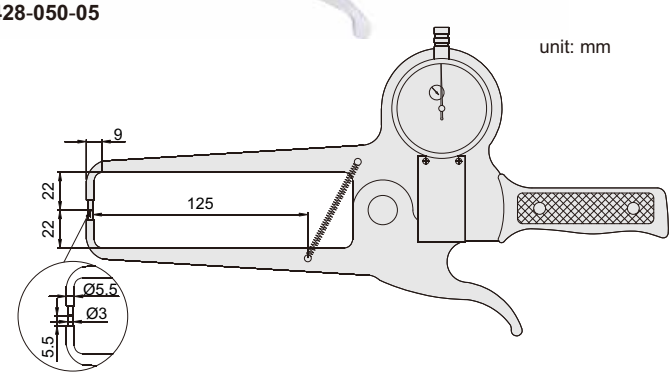



428-250-05

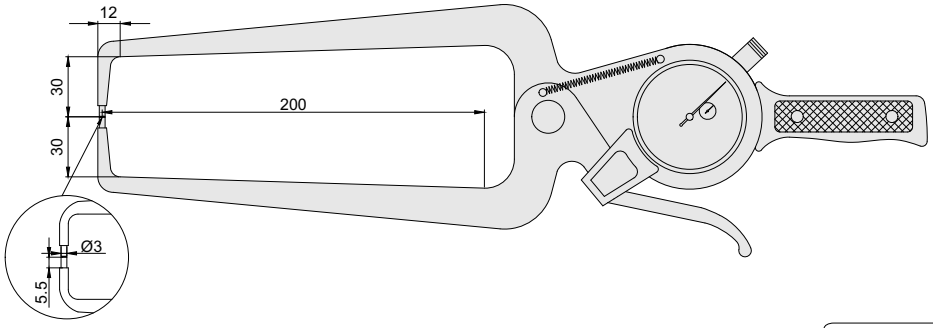

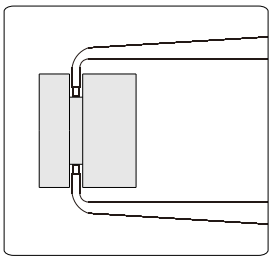

Code	Range	Graduation	Accuracy	Throat depth
428-050-05	0-50mm	0.05mm	±0.1mm	125mm
428-250-05	0-50mm	0.05mm	±0.1mm	200mm

428 EXTERNAL DIAL CALIPER GAUGE

- Measure the external dimension

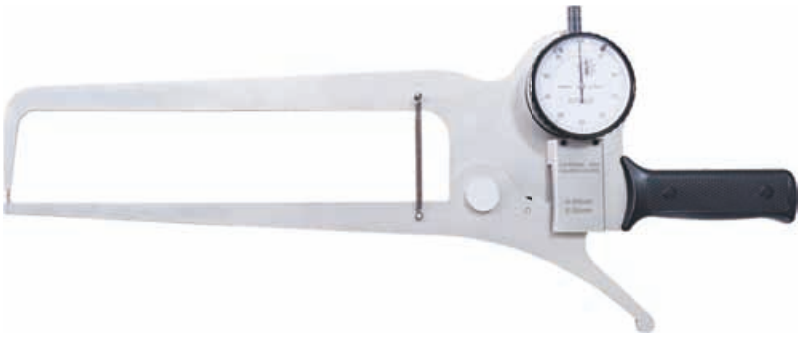

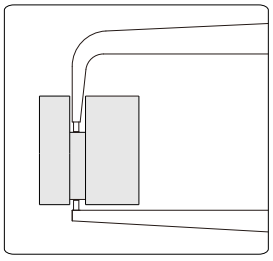

unit: mm

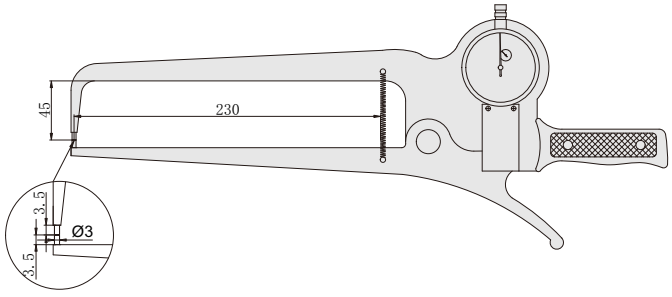

Code	Range	Graduation	Accuracy
428-050-25	0-50mm	0.05mm	±0.1mm

SERIES 425 EXTERNAL DIAL CALIPER GAUGE

- Measure the external dimension



425-010-11

unit: mm

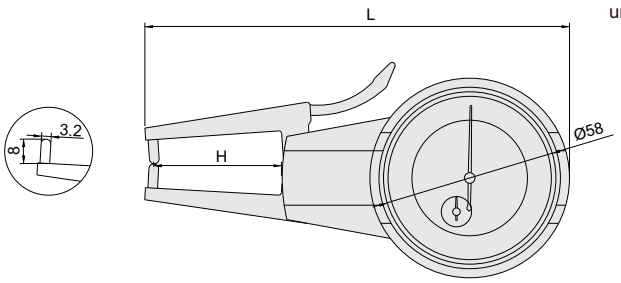

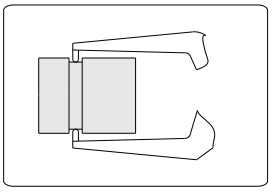

Code	Range	Graduation	Accuracy	L	H
425-010-11	0-10mm	0.01mm	±0.03mm	140	41
425-020-11	0-20mm	0.01mm	±0.03mm	192	92

SERIES 426 INTERNAL DIAL CALIPER GAUGE



426-153-11

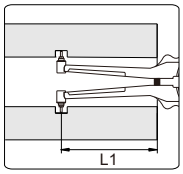

unit: mm

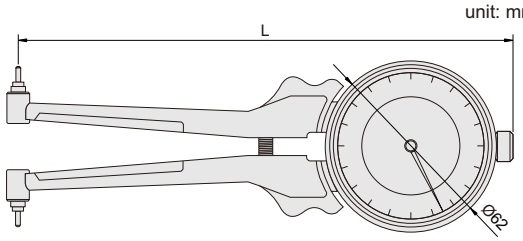

Code	Range	Dial indicator range	Graduation	Accuracy	L1	L	Remark
426-035-11	20-35mm	2mm	0.01mm	±0.02mm	< 70	164	supplied with 7 pairs of points
426-062-11	35-62mm	2mm	0.01mm	±0.02mm	< 75	170	supplied with 5 pairs of points
426-153-11	55-153mm	2mm	0.01mm	±0.02mm	< 90	179	supplied with 6 pairs of points

426-035-11 point (included)

unit: mm



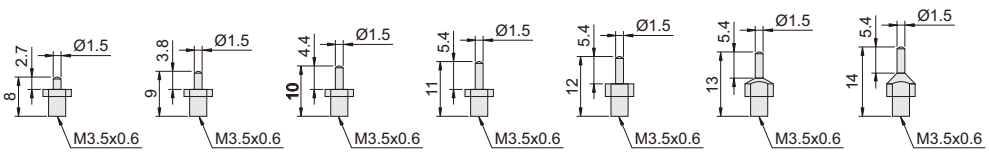

426-062-11 point (included)

unit: mm



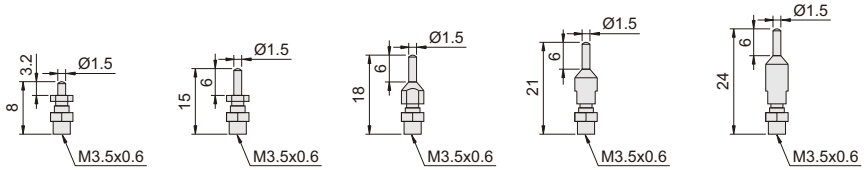

426-153-11 point (included)

unit: mm



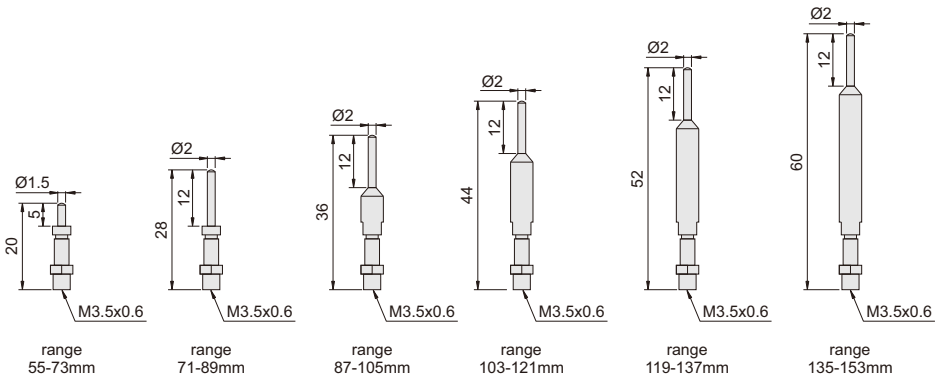

455 THICKNESS GAUGE

- Main body is made of hard plastic



unit: mm

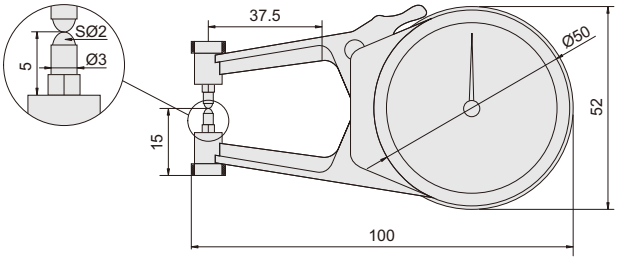

Code	Range	Graduation	Accuracy
455-010-11	0-10mm	0.1mm	±0.1mm

SERIES 419 DIGITAL INTERNAL CALIPER GAUGE

CR2032

- For measuring the internal dimension
- Buttons: on/off, zero, data preset, mm/inch,data hold
- With fraction reading
- Automatic power off



419-008-11

Package



unit: mm

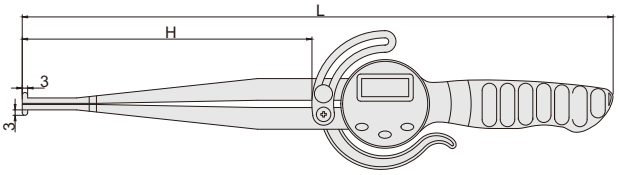

Code	Range	Resolution	Accuracy	L	H
419-006-11	12.7-165mm/0.5-6.5"	0.1mm/0.01"/1/64"	0.2mm/0.01"	252	85
419-008-11	12.7-216mm/0.5-8.5"	0.1mm/0.01"/1/64"	0.3mm/0.02"	327	160

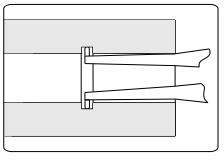

SERIES 429 DIGITAL EXTERNAL CALIPER GAUGE

CR2032

- For measuring the thickness
- Buttons: on/off, zero, data preset, mm/inch,data hold
- With fraction reading
- Automatic power off



429-008-11

unit: mm

Package



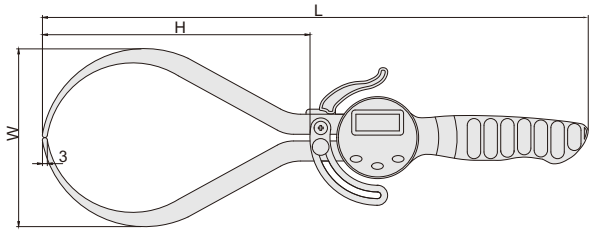

Code	Range	Resolution	Accuracy	L	H	W
429-006-11	0-150mm/0-6"	0.1mm/0.01"/1/64"	0.2mm/0.01"	273	105	75
429-008-11	0-200mm/0-8"	0.1mm/0.01"/1/64"	0.3mm/0.02"	328	160	106

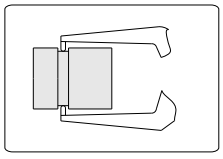

457 DIGITAL THICKNESS GAUGE

CR2032

- Buttons: on/off, zero, mm/inch, data hold
- Automatic power off



unit: mm

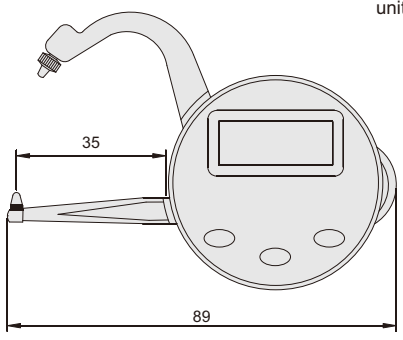

Code	Range	Resolution	Accuracy	Repeatability
457-001-01	0-25.4mm/0-1"	0.01mm, 0.001"	0.05mm	0.02mm

451 THICKNESS GAUGE



unit: mm

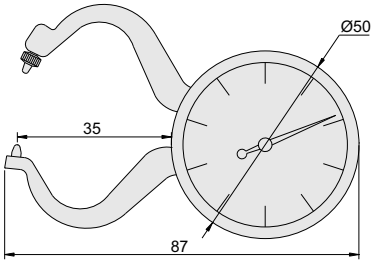

Code	Range	Graduation	Accuracy
451-010-11	0-10mm	0.05mm	±0.1mm

SERIES 452 THICKNESS GAUGE

unit: mm



452-010-11

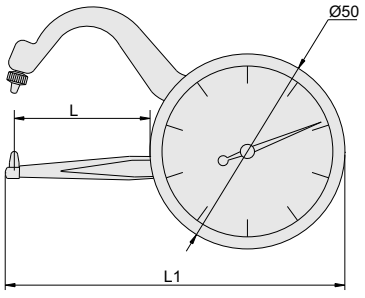

Code	Range	Graduation	Accuracy	L	L1
452-010-11	0-10mm	0.05mm	±0.1mm	35	85
452-010-12	0-10mm	0.05mm	±0.1mm	60	110

453 THICKNESS GAUGE WITH POINTED TIPS



- Pointed tips can be used for small grooves and recesses

unit: mm

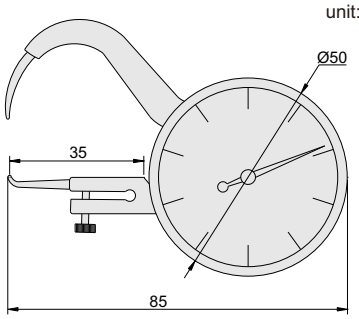

Code	Range	Graduation	Accuracy
453-010-11	0-10mm	0.05mm	±0.1mm

SERIES 431 DIAL SNAP GAUGE



dial indicator is not included

431-025-11

- For quick Go/No-Go judgment of diameter of cylinders and shafts
- Anvil retracting stroke: 3mm
- Measuring force: 6-9N
- Carbide measuring faces
- Front edges of anvils are chamfered for easy workpiece insertion
- Optional indicators:
  --dial indicator, range 10mm, graduation 0.01mm (**code 222-010-11**)
  --digital indicator, range 12.7mm/0.5", resolution 0.001mm/0.00005" (**code 211-010-03**)
  --digital indicator, range 12.7mm/0.5", resolution 0.01mm/0.0005" (**code 211-010-13**)

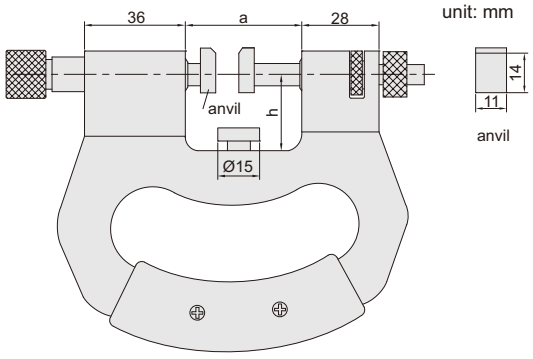

Code	Range	a	h
431-025-11	0-25mm	42	30
431-050-11	25-50mm	69	42.5
431-075-11	50-75mm	94	55
431-100-11	75-100mm	119	57.5
431-125-11	100-125mm	144	70
431-150-11	125-150mm	169	82.5
431-175-11	150-175mm	194	95
431-200-11	175-200mm	219	107
431-225-11	200-225mm	244	120
431-250-11	225-250mm	269	132
431-275-11	250-275mm	294	145
431-300-11	275-300mm	319	157

Optional indicators (optional)



222-010-11 **211-010-03** **211-010-13**

SERIES 442 HIGH PRECISION DIGITAL THICKNESS GAUGE

Data output | Charge



442-105-15



442-101-30



442-101-60

unit: mm

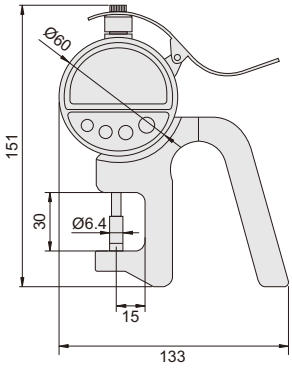

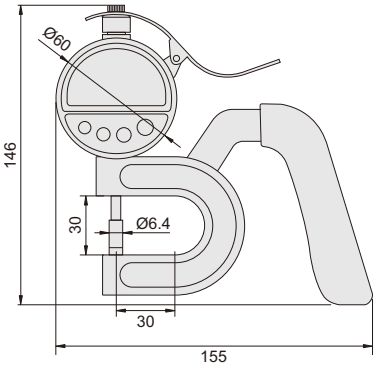

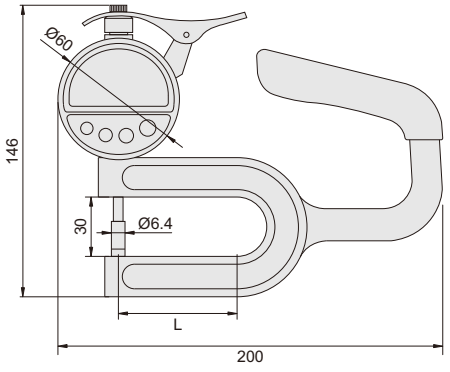

- Absolute encoder, the original data remains after power off
- With recharge cable (only 442-105-15 recharge and data output shared)
- Button: data output, on/off, zero, inch/mm conversion, measuring direction set, data preset absolute/incremental measurement, max./min./rangemeasurement, tolerance set, hold
- Measuring force: 0.5-1N
- With analog reading
- Power: rechargeable battery, for 12 hours continuous working (full charge)

Cable (included)



Code	Range	Resolution	Accuracy	Repeatability	L
442-105-15	0-10mm/0-0.4"	0.0005mm/0.00002"	±0.0015mm	0.0005mm	-
442-101-15	0-10mm/0-0.4"	0.001mm/0.00005"	±0.002mm	0. 001mm	-
442-101-30	0-10mm/0-0.4"	0.001mm/0.00005"	±0.002mm	0.001mm	-
442-101-60	0-10mm/0-0.4"	0.001mm/0.00005"	±0.003mm	0.001mm	60
442-101-00	0-10mm/0-0.4"	0.001mm/0.00005"	±0.004mm	0.001mm	100

SERIES 441 THICKNESS GAUGE

Data output CR2032

- Buttons: on/off, zero, mm/inch
- Automatic power off
- Data output(cable code:200-03 or 200-04)



441-010-11

unit: mm

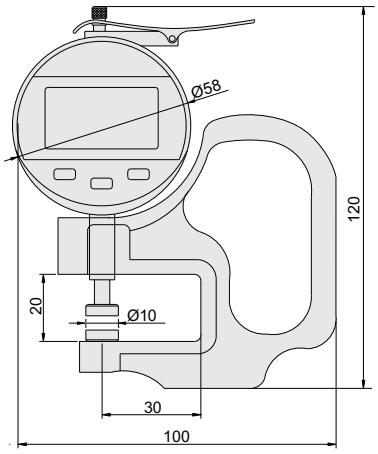

Resolution 0.001mm/0.00005"

Code	Range	Accuracy	Anvil
441-010-01	0-10mm/0-0.4"	±0.005mm	A
441-010-02	0-10mm/0-0.4"	±0.005mm	B

Resolution 0.01mm/0.0005"

Code	Range	Accuracy	Anvil
441-010-11	0-10mm/0-0.4"	±0.02mm	A
441-010-12	0-10mm/0-0.4"	±0.02mm	B

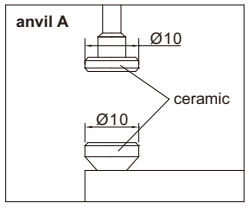

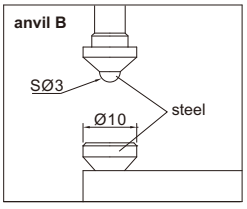

441 THICKNESS GAUGE

Data output CR2032

- Ceramic spindle tip and anvil
- Buttons: on/off, zero, mm/inch, ABS
- Automatic power off
- Data output(cable code:200-03 or 200-04)



unit: mm

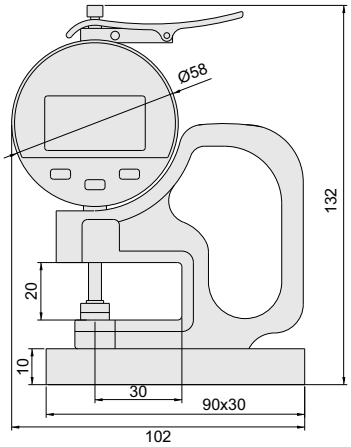

Code	Range	Resolution	Accuracy
441-010-11B	0-10mm/0-0.4"	0.01mm/0.0005"	±0.02mm

443 THICKNESS GAUGE

Jeweled

- Ceramic spindle tip and anvil



unit: mm

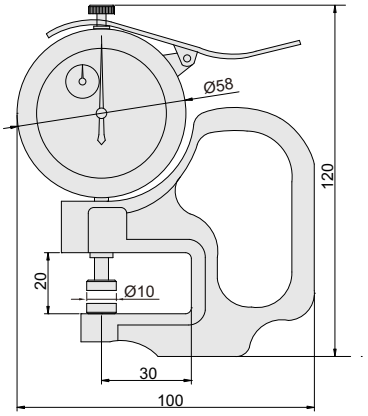

Code	Range	Graduation	Accuracy
443-001-01	0-1mm	0.001mm	±0.005mm

SERIES 443 THICKNESS GAUGE

Jeweled

- Graduation: 0.01mm

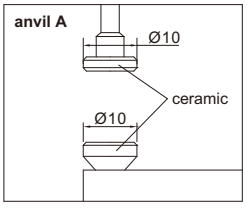

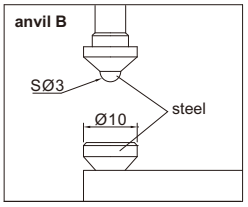



443-010-11

unit: mm

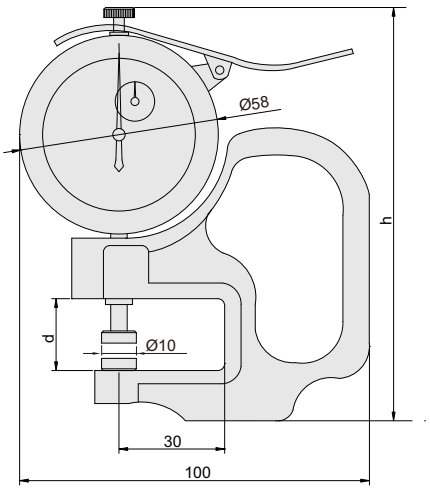

Code	Range	Accuracy	Anvil	d	h
443-010-11	0-10mm	±0.02mm	A	20	120
443-010-12	0-10mm	±0.02mm	B	20	120
443-030-11	0-30mm	±0.035mm	A	38	140
443-030-12	0-30mm	±0.035mm	B	38	140

SERIES 460 DIGITAL THICKNESS GAUGE

Data output CR2032

- Buttons: on/off, zero, mm/inch, ABS
- Automatic power off
- Data output(cable code:200-03 or 200-04)



460-010-11

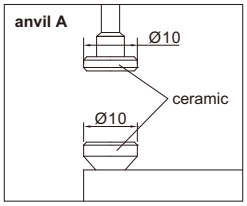

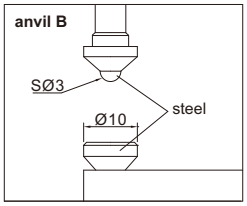

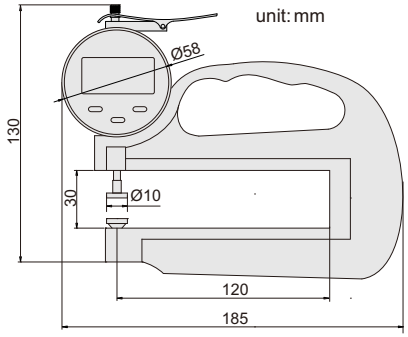

Code	Range	Resolution	Accuracy	Anvil
460-010-11	0-10mm/0-0.4"	0.01mm/0.0005"	±0.02mm	A
460-010-12	0-10mm/0-0.4"	0.01mm/0.0005"	±0.02mm	B

460 DIGITAL THICKNESS GAUGE

Data output CR2032

- Ceramic spindle tip and anvil
- Buttons: on/off, zero, mm/inch, ABS
- Automatic power off
- Data output(cable code:200-03 or 200-04)
- With metal base



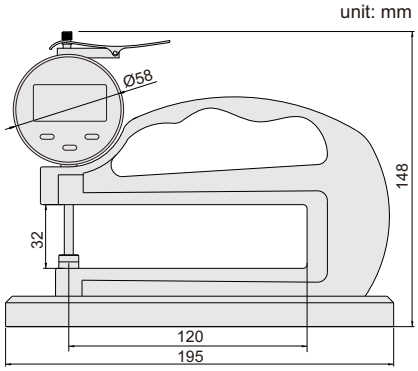

Code	Range	Resolution	Accuracy
460-010-11B	0-10mm/0-0.4"	0.01mm/0.0005"	±0.02mm

SERIES 444 THICKNESS GAUGE

Jeweled

- Large throat depth, for large workpiece measurement
- Graduation: 0.01mm

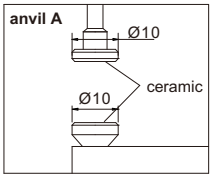

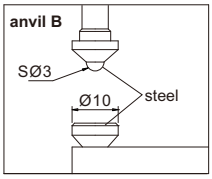



444-010-11

unit: mm

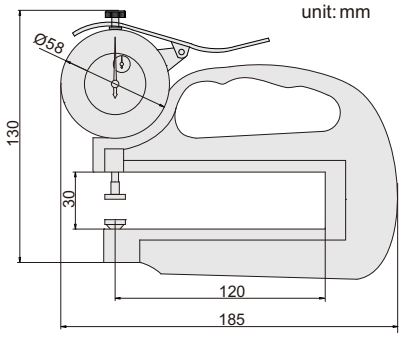

Code	Range	Accuracy	Anvil
444-010-11	0-10mm	±0.02mm	A
444-020-11	0-20mm	±0.03mm	A
444-010-12	0-10mm	±0.02mm	B
444-020-12	0-20mm	±0.03mm	B

SERIES 444 THICKNESS GAUGE

Jeweled

- Large throat depth, for large workpiece measurement
- Graduation: 0.01mm

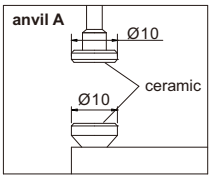

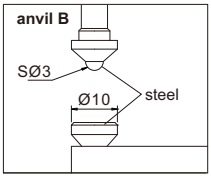

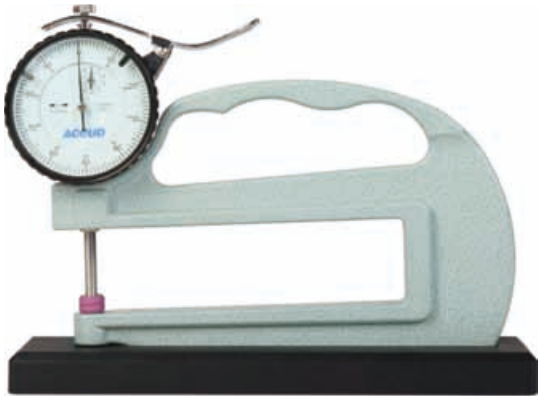

444-010-11B

unit: mm

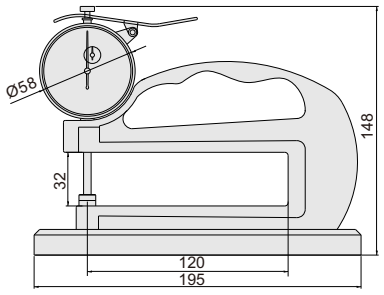

Code	Range	Accuracy	Anvil
444-010-11B	0-10mm	±0.02mm	A
444-020-11B	0-20mm	±0.03mm	A
444-010-12B	0-10mm	±0.02mm	B
444-020-12B	0-20mm	±0.03mm	B

461 DIGITAL TUBE THICKNESS GAUGE

Data output

CR2032

- Buttons: on/off, zero, mm/inch, ABS
- Automatic power off
- Data output(cable code:200-03 or 200-04)



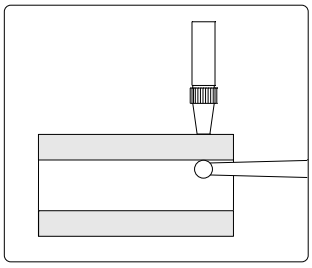

unit: mm

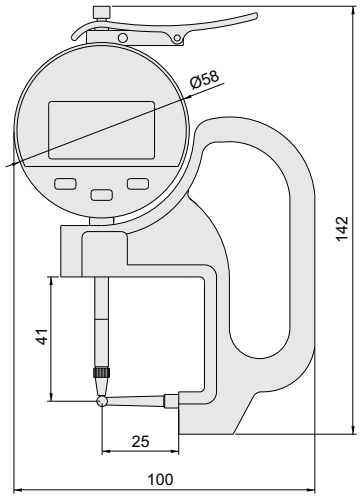

Code	Range	Resolution	Accuracy
461-010-11	0-10mm/0-0.4"	0.01mm/0.0005"	±0.02mm

440 TUBE THICKNESS GAUGE

Jeweled

- Measure tube wall thickness



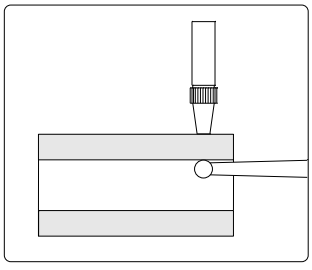

unit: mm

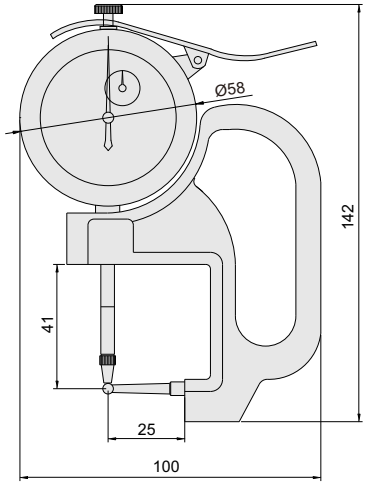

Code	Range	Graduation	Accuracy
440-010-11	0-10mm	0.01mm	±0.02mm

462 DIGITAL TUBE THICKNESS GAUGE

Data output | CR2032

- Buttons: on/off, zero, mm/inch, ABS
- Automatic power off
- Data output(cable code:200-03 or 200-04)



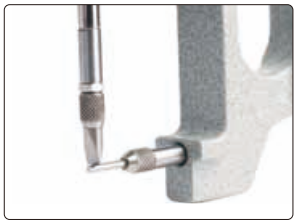

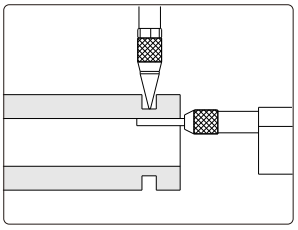

unit: mm

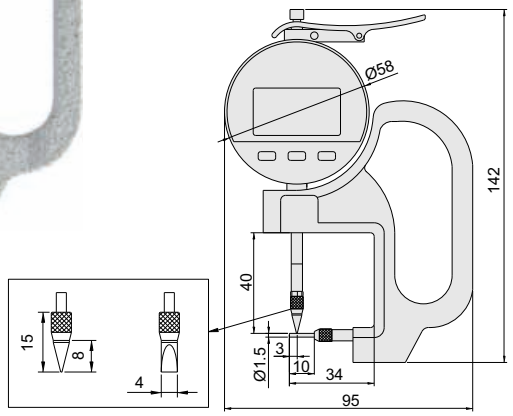

Code	Range	Resolution	Accuracy
462-010-11	0-10mm/0-0.4"	0.01mm/0.0005"	±0.02mm

440 TUBE THICKNESS GAUGE

Jeweled

- Measure tube wall thickness





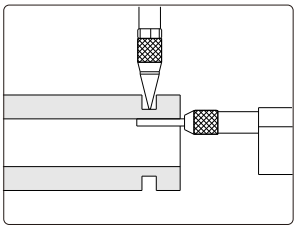

unit: mm

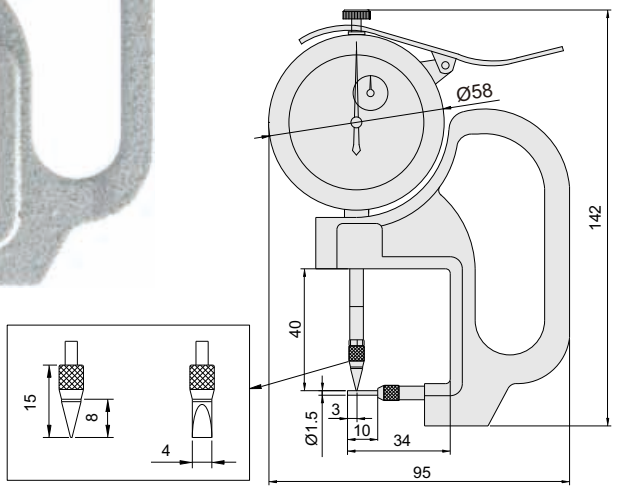

Code	Range	Graduation	Accuracy
440-010-22	0-10mm	0.01mm	±0.02mm

448 THICKNESS GAUGE

Jeweled

- Measure the wall thickness of tube



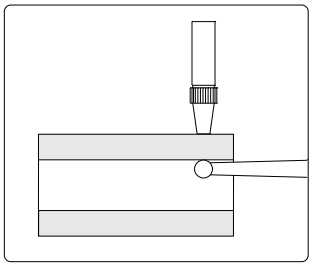

unit: mm

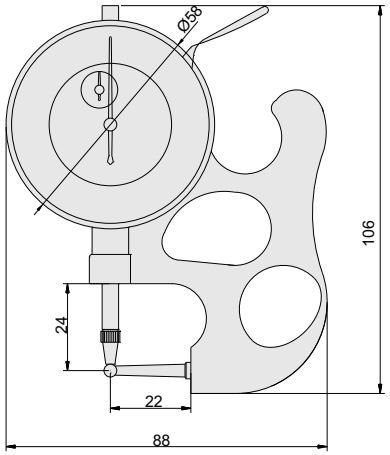

Code	Range	Accuracy	Graduation
448-010-11	0-10mm	±0.02mm	0.01mm

464 POINT THICKNESS GAUGE

- Pointed tips can be used for small grooves and recesses



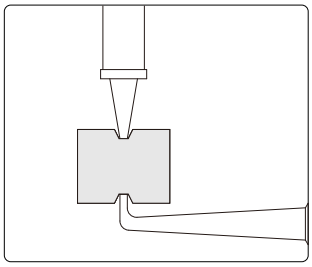

unit: mm

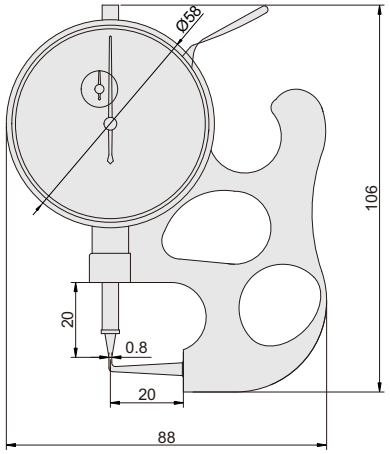

Code	Range	Accuracy	Graduation
464-010-11	0-10mm	±0.02mm	0.01mm

463 DIGITAL TUBE THICKNESS GAUGE

Data output

CR2032

- Buttons: on/off, zero, mm/inch, ABS
- Automatic power off
- Data output(cable code:200-03 or 200-04)



unit: mm

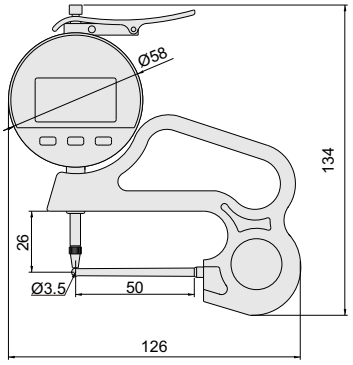

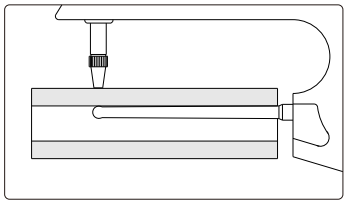

Code	Range	Resolution	Accuracy
463-010-11	0-10mm/0-0.4"	0.01mm/0.0005"	±0.02mm

449 THICKNESS GAUGE

- Graduation: 0.01mm
- Ceramic anvil,diameter: Ø10mm



unit: mm

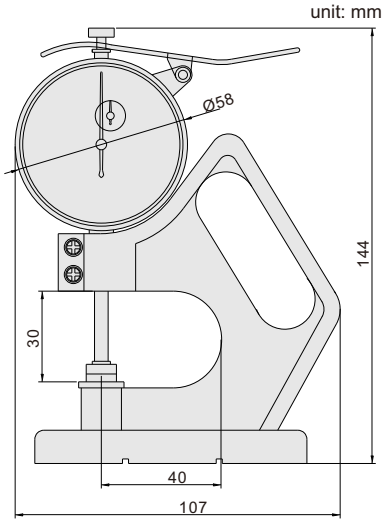

Code	Range	Accuracy
449-010-11	0-10mm	±0.02mm

467 DIGITAL ROLLER THICKNESS GAUGE

Data output

CR2032

- For continuous measurement
- Buttons: on/off, zero, mm/inch
- Keep preset data in memory after restart
- Automatic power off
- Data output(cable code:200-03 or 200-04)



unit: mm

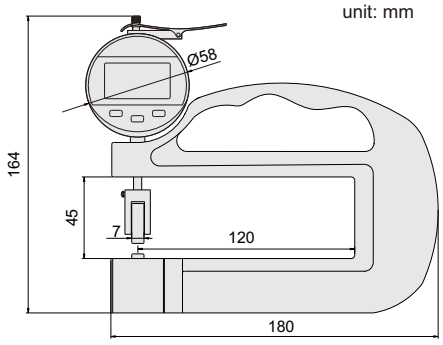

Code	Range	Resolution	Accuracy
467-010-11	0-10mm/0-0.4"	0.01mm/0.0005"	±0.02mm

445 THICKNESS GAUGE WITH ROLLING WHEEL

Jeweled

- For continuous measurement



unit: mm

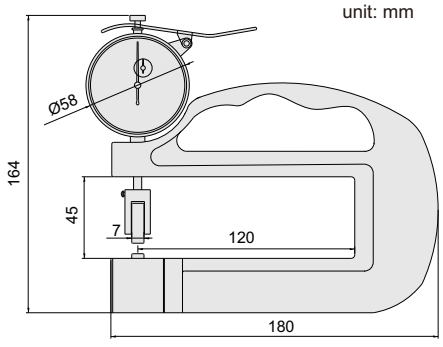

Code	Range	Graduation	Accuracy
445-010-11	0-10mm	0.01mm	±0.02mm

SERIES 465 DIGITAL THICKNESS GAUGE WITH CONSTANT MEASURING FORCE

IP65 CR2032

- Buttons: on/off, zero, unit (mm/in/fraction)
- Automatic power off
- With 50g standard weight block



465-010-01

Aluminum alloy stage

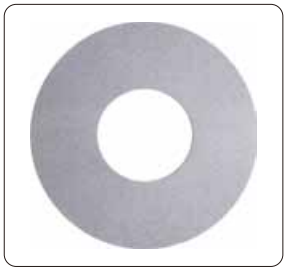

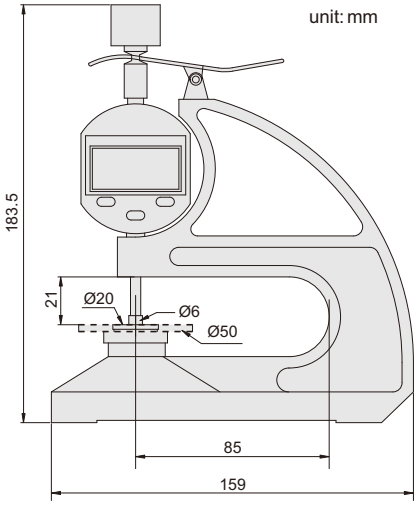

Code	Range	Resolution	Accuracy
465-010-01	0-12.7mm/0.5"	0.001mm/0.00005"	±0.005mm
465-010-11	0-12.7mm/0.5"	0.01mm/0.0005"	±0.02mm

446 THICKNESS GAUGE



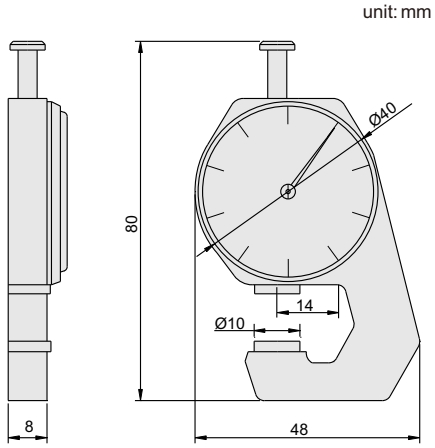

Code	Range	Graduation	Accuracy
446-010-11	0-10mm	0.1mm	±0.05mm

SERIES 469 DIGITAL THICKNESS GAUGE

CR2032

- Buttons: on/off, zero, mm/inch
- Steel spindle tip and anvil

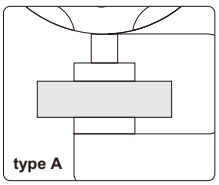

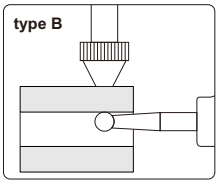

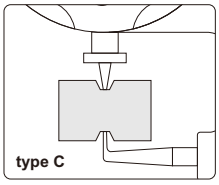



469-010-11



469-020-31

unit: mm

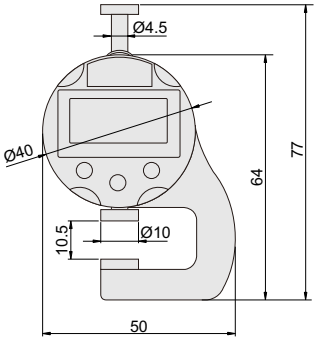

469-010-11

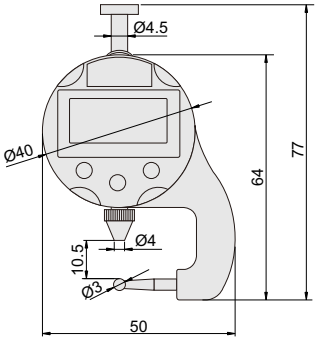

469-010-21

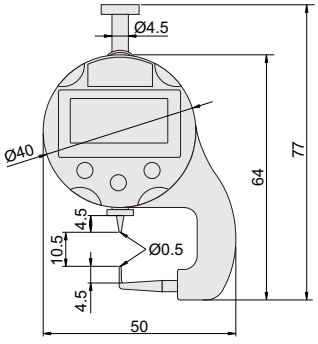

469-010-31

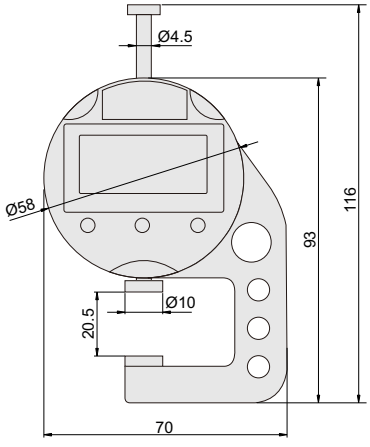

469-020-11

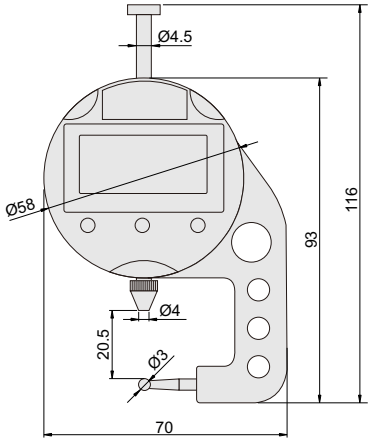

469-020-21

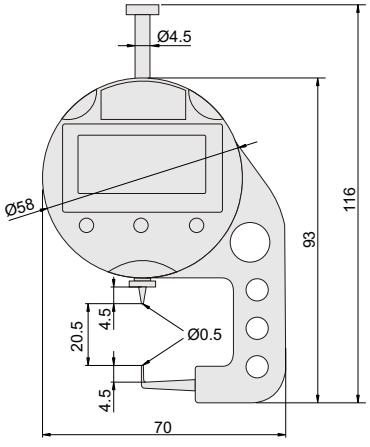

469-020-31

Code	Range	Resolution	Accuracy	Type
469-010-11	0-10mm/0-0.4"	0.01mm/0.0005"	±0.02mm	A
469-010-21	0-10mm/0-0.4"	0.01mm/0.0005"	±0.02mm	B
469-010-31	0-10mm/0-0.4"	0.01mm/0.0005"	±0.02mm	C
469-020-11	0-20mm/0-0.8"	0.01mm/0.0005"	±0.02mm	A
469-020-21	0-20mm/0-0.8"	0.01mm/0.0005"	±0.02mm	B
469-020-31	0-20mm/0-0.8"	0.01mm/0.0005"	±0.02mm	C

447 THICKNESS GAUGE

- Stainless steel spindle tip and anvil



unit: mm

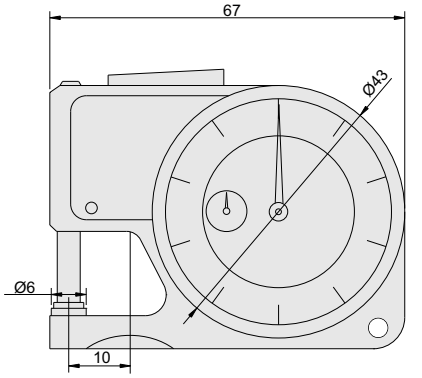

Code	Range	Graduation	Accuracy
447-010-11	0-10mm	0.01mm	±0.02mm

450 PET BOTTLE WALL THICKNESS GAUGE

- Optional accessories: digital indicator (code: 212-010-13)



Application



unit: mm

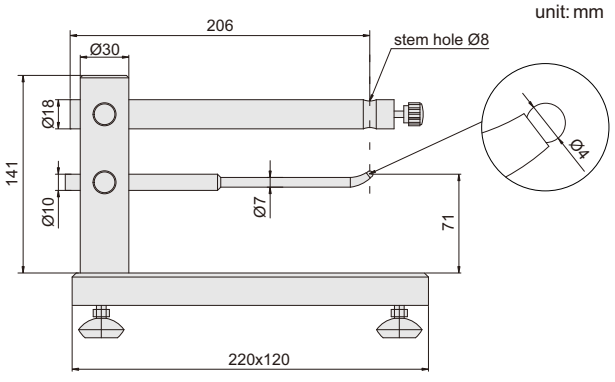

Code	Measuring thickness	Accuracy
450-010-11	12.7mm	±0.02mm

433 DIGITAL SNAP GAUGE

Data output | CR2032

- Resolution: 0.01mm/0.0005"
- Buttons: on/off, zero, mm/inch
- Automatic power on/off
- Data output
- Made of stainless steel



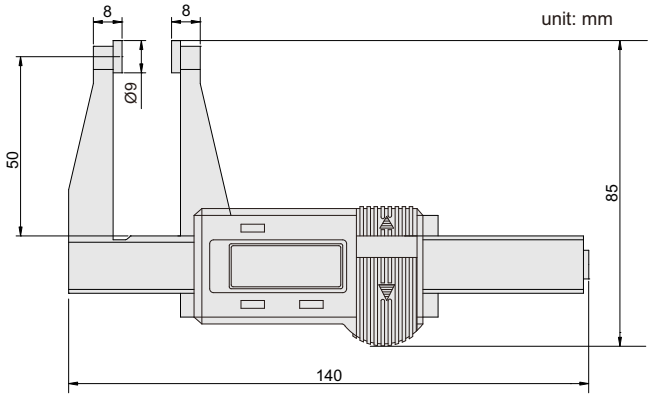

Code	Range	Accuracy
433-002-11	0-50mm/0-2"	±0.03mm

432 DIGITAL SNAP GAUGE

LR44

- Buttons: on/off, zero, mm/inch



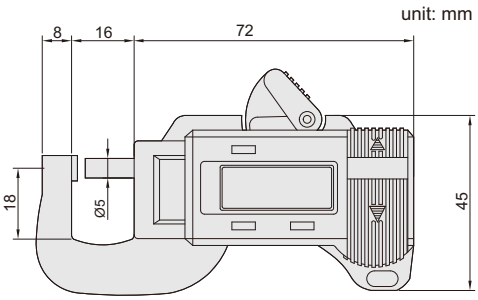

Code	Range	Resolution	Accuracy
432-012-11	0-12.7mm/0-0.5"	0.01mm/0.0005"	±0.03mm

434 DIGITAL SNAP GAUGE

LR44

- Buttons: on/off, zero, mm/inch
- Automatic power on/off



unit: mm

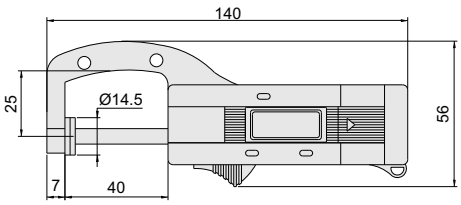

Code	Range	Resolution	Accuracy
434-001-11	0-25mm/0-1"	0.01mm/0.0005"	±0.03mm

435 DIGITAL SNAP GAUGE

Data output CR2032

- Resolution: 0.01mm/0.0005"
- Buttons: on/off, zero, mm/in, INC
- Automatic power on/off
- Data output(cable code:100-03 or 100-04)
- Made of stainless steel



unit: mm

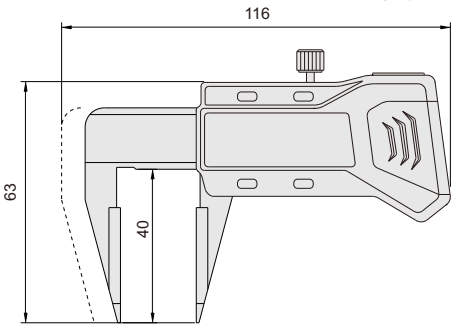

Code	Range	Accuracy
435-001-11	0-25mm/0-1"	±0.03mm

436 DIGITAL 3-PURPOSE SNAP GAUGE

- Resolution: 0.01mm/0.0005"
- Buttons: on/off, zero, mm/inch
- Made of stainless steel



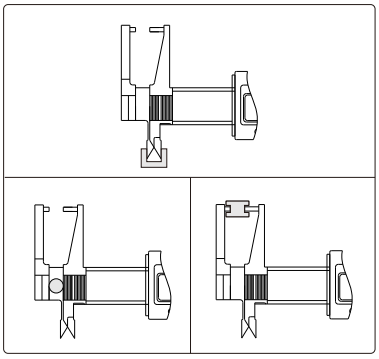

unit: mm

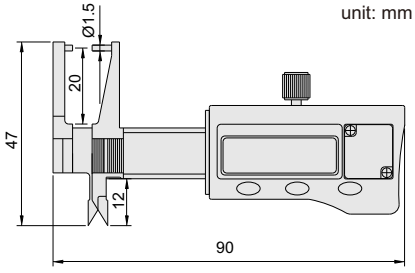

Code	Range	Accuracy
436-001-11	0-25mm/0-1"	±0.03mm

SERIES 298 CRANKSHAFT TESTER

- To test crankshaft deflection
- The balance block is mounted on the back of dial indicator to keep the dial indicator facing up

unit: mm

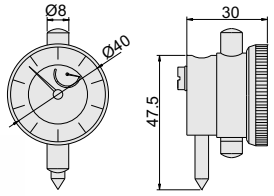

dial indicator

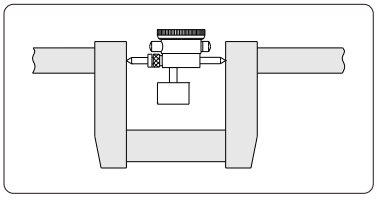



298-012-11

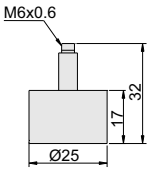

balance block

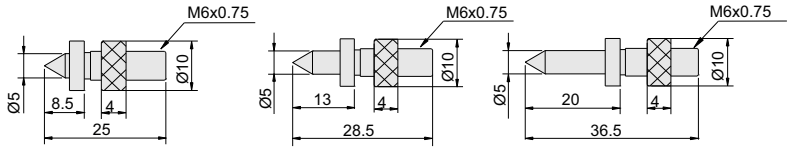

anvils

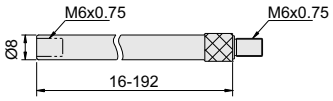

extension rods

Code	Range	Dial indicator range	Graduation	Accuracy	Extension rods
298-012-11	60-300mm	3mm	0.01mm	±0.016mm	16mm, 32mm, 64mm, 128mm
298-020-11	60-500mm	3mm	0.01mm	±0.016mm	16mm, 32mm, 64mm, 96mm, 128mm, 192mm

SERIES 511 CERAMIC GAUGE BLOCK SET

Certificate

- Made of ceramic
- Meet ISO 3650
- With manufacturer inspection certificate
- Code explanation

511-□□□-□X
→0: grade0
→1: grade1



511-087-00

Size:

Size (L)	W	H
0.5mm≤L≤10mm	9mm	30mm
L>10mm	9mm	35mm

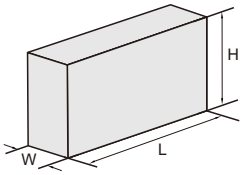

Example:

Code	Quantity	Grade
511-112-00	112	0
511-112-01	112	1

Code	Blocks per set	Block allocation		
		Size(mm)	Step(mm)	Quantity
511-122-0X	122	1.0005		1
		1.001-1.009	0.001	9
		1.01-1.49	0.01	49
		1.6-1.9	0.1	4
		0.5-24.5	0.5	49
		30-100	10	8
		25-75		2
511-112-0X	112	1.0005		1
		1.001-1.009	0.001	9
		1.01-1.49	0.01	49
		0.5-24.5	0.5	49
		25-100	25	4
511-103-0X	103	1.005		1
		1.01-1.49	0.01	49
		0.5-24.5	0.5	49
		25-100	25	4
511-088-0X	88	1.0005		1
		1.001-1.009	0.001	9
		1.01-1.49	0.01	49
		0.5-9.5	0.5	19
		10-100	10	10
511-087-0X	87	1.001-1.009	0.001	9
		1.01-1.49	0.01	49
		0.5-9.5	0.5	19
		10-100	10	10
511-083-0X	83	0.5		1
		1		1
		1.005		1
		1.01-1.49	0.01	49
		1.5-1.9	0.1	5
		2-9.5	0.5	16
		10-100	10	10
511-076-0X	76	1.005		1
		1.01-1.49	0.01	49
		0.5-9.5	0.5	19
		10-40	10	4
		50-100	25	3

Code	Blocks per set	Block allocation		
		Size(mm)	Step(mm)	Quantity
511-056-0X	56	0.5		1
		1.001-1.009	0.001	9
		1.01-1.09	0.01	9
		1.1-1.9	0.1	9
		1-24	1	24
		25-100	25	4
511-047-0X	47	1.005		1
		1.01-1.09	0.01	9
		1.1-1.9	0.1	9
		1-24	1	24
		25-100	25	4
511-047-1X	47	1.005		1
		1.01-1.19	0.01	19
		1.2-1.9	0.1	8
		1-9	1	9
		10-100	10	10
511-046-0X	46	1.001-1.009	0.001	9
		1.01-1.09	0.01	9
		1.1-1.9	0.1	9
		1-9	1	9
		10-100	10	10
511-034-0X	34	1.0005		1
		1.001-1.009	0.001	9
		1.01-1.09	0.01	9
		1.1-1.9	0.1	9
		1-5	1	5
		10		1
511-032-0X	32	1.005		1
		1.01-1.09	0.01	9
		1.1-1.9	0.1	9
		1-9	1	9
		10-30	10	3
		50		1

SERIES 512 CARBIDE GAUGE BLOCK SET

Certificate

- Made of carbide
- Meet ISO 3650
- With manufacturer inspection certificate
- Code explanation

512-□□□-□XT
→0: grade0
→1: grade1



512-087-01T

Example:

Code	Grade	Quantity
512-112-00T	0	112
512-112-01T	1	112

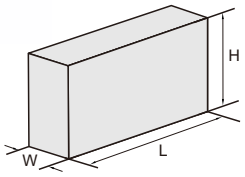

Size:

Size (L)	W	H
0.5mm≤L≤10mm	9mm	30mm
L>10mm	9mm	35mm

Code	Blocks per set	Block allocation		
		Size(mm)	Step(mm)	Quantity
512-122-0XT	122	1.0005		1
		1.001-1.009	0.001	9
		1.01-1.49	0.01	49
		1.6-1.9	0.1	4
		0.5-24.5	0.5	49
		30-100	10	8
		25-75	50	2
512-112-0XT	112	1.0005		1
		1.001-1.009	0.001	9
		1.01-1.49	0.01	49
		0.5-24.5	0.5	49
		25-100	25	4
512-103-0XT	103	1.005		1
		1.01-1.49	0.01	49
		0.5-24.5	0.5	49
		25-100	25	4
512-087-0XT	87	1.001-1.009	0.001	9
		1.01-1.49	0.01	49
		0.5-9.5	0.5	19
		10-100	10	10
512-083-0XT	83	0.5		1
		1		1
		1.005		1
		1.01-1.49	0.01	49
		1.5-1.9	0.1	5
		2-9.5	0.5	16
		10-100	10	10
512-076-0XT	76	1.005		1
		1.01-1.49	0.01	49
		0.5-9.5	0.5	19
		10-40	10	4
		50-100	25	3

Code	Blocks per set	Block allocation		
		Size(mm)	Step(mm)	Quantity
512-047-0XT	47	1.005		1
		1.01-1.09	0.01	9
		1.1-1.9	0.1	9
		1-24	1	24
		25-100	25	4
512-047-1XT	47	1.005		1
		1.01-1.19	0.01	19
		1.2-1.9	0.1	8
		1-9	1	9
		10-100	10	10
512-046-0XT	46	1.001-1.009	0.001	9
		1.01-1.09	0.01	9
		1.1-1.9	0.1	9
		1-9	1	9
		10-100	10	10
512-034-0XT	34	1.0005		1
		1.001-1.009	0.001	9
		1.01-1.09	0.01	9
		1.1-1.9	0.1	9
		1-5	1	5
		10		1
512-032-0XT	32	1.005		1
		1.01-1.09	0.01	9
		1.1-1.9	0.1	9
		1-9	1	9
		10-30	10	3
		50		1

SERIES 512 STEEL GAUGE BLOCK SET

Certificate

- Made of steel
- Meet ISO 3650
- With manufacturer inspection certificate
- Code explanation

512-□□□-□X
- →0: grade0
- →1: grade1
- →2: grade2



512-087-02

Example:

Code	Grade	Quantity
512-112-00	0	112
512-112-01	1	112
512-112-02	2	112

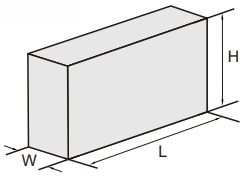

Size:

Size (L)	W	H
0.5mm≤L≤10mm	9mm	30mm
L>10mm	9mm	35mm

Code	Blocks per set	Block allocation		
		Size(mm)	Step (mm)	Quantity
512-122-0X	122	1.0005		1
		1.001-1.009	0.001	9
		1.01-1.49	0.01	49
		1.6-1.9	0.1	4
		0.5-24.5	0.5	49
		30-100	10	8
		25-75	50	2
512-112-0X	112	1.0005		1
		1.001-1.009	0.001	9
		1.01-1.49	0.01	49
		0.5-24.5	0.5	49
		25-100	25	4
512-103-0X	103	1.005		1
		1.01-1.49	0.01	49
		0.5-24.5	0.5	49
		25-100	25	4
512-088-0X	88	1.0005		1
		1.001-1.009	0.001	9
		1.01-1.49	0.01	49
		0.5-9.5	0.5	19
		10-100	10	10
512-087-0X	87	1.001-1.009	0.001	9
		1.01-1.49	0.01	49
		0.5-9.5	0.5	19
		10-100	10	10
512-083-0X	83	0.5		1
		1		1
		1.005		1
		1.01-1.49	0.01	49
		1.5-1.9	0.1	5
		2-9.5	0.5	16
		10-100	10	10

Code	Blocks per set	Block allocation		
		Size(mm)	Step (mm)	Quantity
512-076-0X	76	1.005		1
		1.01-1.49	0.01	49
		0.5-9.5	0.5	19
		10-40	10	4
		50-100	25	3
512-056-0X	56	0.5		1
		1.001-1.009	0.001	9
		1.01-1.09	0.01	9
		1.1-1.9	0.1	9
		1-24	1	24
		25-100	25	4
512-047-0X	47	1.005		1
		1.01-1.09	0.01	9
		1.1-1.9	0.1	9
		1-24	1	24
		25-100	25	4
512-047-1X	47	1.005		1
		1.01-1.19	0.01	19
		1.2-1.9	0.1	8
		1-9	1	9
		10-100	10	10
512-046-0X	46	1.001-1.009	0.001	9
		1.01-1.09	0.01	9
		1.1-1.9	0.1	9
		1-9	1	9
		10-100	10	10
512-038-0X	38	1.005		1
		1.01-1.09	0.01	9
		1.1-1.9	0.1	9
		1-9	1	9
		10-100	10	10

Code	Blocks per set	Block allocation		
		Size(mm)	Step (mm)	Quantity
512-034-0X	34	1.0005		1
		1.001-1.009	0.001	9
		1.01-1.09	0.01	9
		1.1-1.9	0.1	9
		1-5	1	5
		10		1
512-032-0X	32	1.005		1
		1.01-1.09	0.01	9
		1.1-1.9	0.1	9
		1-9	1	9
		10-30	10	3
		50		1
512-032-1X	32	1.005		1
		1.01-1.09	0.01	9
		1.1-1.9	0.1	9
		1-9	1	9
		10-30	10	3
		60		1
512-010-1X	10	0.991-1	0.001	10
512-010-2X	10	1-1.009	0.001	10
512-008-0X	8	125-175	25	3
		200-250	50	2
		300-500	100	3

SERIES 512 STEEL GAUGE BLOCK SET

Certificate

- Made of alloy steel
- Meet ASME B89.1.9
- With manufacturer inspection certificate
- Code explanation

512-□□□-□XI
- →0: grade 0
- →1: grade1
- →2: grade2



512-081-00I

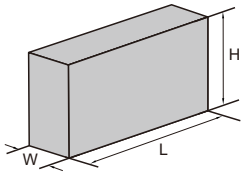

Size:

Size(L)	W	H
0.02≤L≤0.394"	0.354"	1.181"
L > 0.394"	0.354"	1.378"

Example:

Code	Quantity	Grade
512-036-00I	36	0
512-036-01I	36	1
512-036-02I	36	2

Code	Blocks per set	Block allocation		
		Size(inch)	Step(inch)	Quantity
512-008-0XI	8	5-8	1	4
		10-12	2	2
		16		1
		20		1
512-081-0XI	81	0.1001-0.1009	0.0001	9
		0.101-0.149	0.001	49
		0.05-0.95	0.05	19
		1-4	1	4

Code	Blocks per set	Block allocation		
		Size(inch)	Step(inch)	Quantity
512-036-0XI	36	0.05		1
		0.1001-0.1009	0.0001	9
		0.101-0.109	0.001	9
		0.11-0.19	0.01	9
		0.1-0.5	0.1	5
		1		1
		2		1
		4		1

SERIES 515 CERAMIC INDIVIDUAL GAUGE BLOCK (<10MM)

Certificate

- Made of ceramic
- Meet ISO 3650
- With manufacturer inspection certificate
- Code explanation

515-□□□-□X
- →0: grade0
- →1: grade1

decimal ← integer



515-700-70

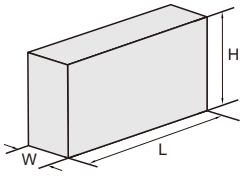

Size:

Size(L)	W	H
0.5mm≤L≤10mm	9mm	30mm
L>10mm	9mm	35mm

Supplied below size, unit:mm

0.5	1.01	1.13	1.25	1.37	1.49	5
1	1.02	1.14	1.26	1.38	1.5	5.1
1.0005	1.03	1.15	1.27	1.39	1.6	5.5
1.001	1.04	1.16	1.28	1.4	1.7	6
1.002	1.05	1.17	1.29	1.41	1.8	6.5
1.003	1.06	1.18	1.3	1.42	1.9	7
1.004	1.07	1.19	1.31	1.43	2	7.5
1.005	1.08	1.2	1.32	1.44	2.5	7.7
1.006	1.09	1.21	1.33	1.45	3	8
1.007	1.1	1.22	1.34	1.46	3.5	8.5
1.008	1.11	1.23	1.35	1.47	4	9
1.009	1.12	1.24	1.36	1.48	4.5	9.5

Example:

Code	Grade	Size(mm)
515-500-00	0	0.5
515-500-01	1	0.5
515-000-10	0	1
515-0005-11	1	1.0005
515-400-11	1	1.4
515-480-11	1	1.48

SERIES 516 CERAMIC INDIVIDUAL GAUGE BLOCK (≥10MM)

Certificate

- Made of ceramic
- Meet ISO 3650
- With manufacturer inspection certificate
- Code explanation

516-□□□-□X
→0: grade0
→1: grade1



516-800-01

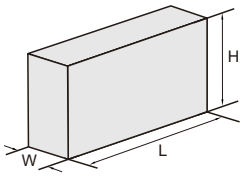

Example:

Code	Grade	Size(mm)
516-200-00	0	20
516-200-01	1	20

Size:

Size(L)	W	H
0.5mm≤L≤10mm	9mm	30mm
L>10mm	9mm	35mm

Code	Size(mm)
516-100-0X	10
516-103-0X	10.3
516-105-0X	10.5
516-110-0X	11
516-115-0X	11.5
516-120-0X	12
516-125-0X	12.5
516-129-0X	12.9
516-130-0X	13
516-135-0X	13.5

Code	Size(mm)
516-140-0X	14
516-145-0X	14.5
516-150-0X	15
516-155-0X	15.5
516-160-0X	16
516-165-0X	16.5
516-170-0X	17
516-175-0X	17.5
516-176-0X	17.6
516-180-0X	18

Code	Size(mm)
516-185-0X	18.5
516-190-0X	19
516-195-0X	19.5
516-200-0X	20
516-202-0X	20.2
516-205-0X	20.5
516-210-0X	21
516-215-0X	21.5
516-220-0X	22
516-225-0X	22.5

Code	Size(mm)
516-228-0X	22.8
516-230-0X	23
516-235-0X	23.5
516-240-0X	24
516-245-0X	24.5
516-250-0X	25
516-300-0X	30
516-400-0X	40
516-413-0X	41.3
516-500-0X	50

Code	Size(mm)
516-600-0X	60
516-700-0X	70
516-750-0X	75
516-800-0X	80
516-900-0X	90
516-004-1X	100
516-005-1X	125
516-006-1X	150

SERIES 513 STEEL INDIVIDUAL GAUGE BLOCK(<10MM)

CUSTOM-MADE
other sizes are available upon request

Certificate

- Made of steel
- Meet ISO 3650
- With manufacturer inspection certificate
- Code explanation

513-□□□-□X
→0: grade0
→1: grade1
→2: grade2
decimal ←
integer



513-700-70

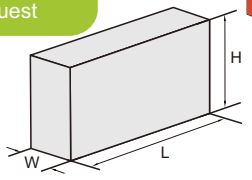

Size:

Size (L)	W	H
0.5mm≤L≤10mm	9mm	30mm
L>10mm	9mm	35mm

Example:

Code	Size(mm)	Grade
513-500-00	0.5	0
513-500-01	0.5	1
513-500-02	0.5	2
513-000-10	1	0
513-0005-11	1.0005	1
513-400-12	1.4	2
513-480-11	1.48	1

Supplied below size, unit:mm

0.5	0.69	0.88	0.998	1.07	1.26	1.45	2.008	2.19	2.38	4
0.51	0.7	0.89	0.999	1.08	1.27	1.46	2.009	2.2	2.39	4.5
0.52	0.71	0.9	1	1.09	1.28	1.47	2.01	2.21	2.4	5
0.53	0.72	0.91	1.0005	1.1	1.29	1.48	2.02	2.22	2.41	5.1
0.54	0.73	0.92	1.001	1.11	1.3	1.49	2.03	2.23	2.42	5.5
0.55	0.74	0.93	1.002	1.12	1.31	1.5	2.04	2.24	2.43	6
0.56	0.75	0.94	1.003	1.13	1.32	1.6	2.05	2.25	2.44	6.5
0.57	0.76	0.95	1.004	1.14	1.33	1.7	2.06	2.26	2.45	7
0.58	0.77	0.96	1.005	1.15	1.34	1.8	2.07	2.27	2.46	7.5
0.59	0.78	0.97	1.006	1.16	1.35	1.9	2.08	2.28	2.47	7.7
0.6	0.79	0.98	1.007	1.17	1.36	2	2.09	2.29	2.48	8
0.61	0.8	0.99	1.008	1.18	1.37	2.0005	2.1	2.3	2.49	8.5
0.62	0.81	0.991	1.009	1.19	1.38	2.001	2.11	2.31	2.5	9
0.63	0.82	0.992	1.01	1.2	1.39	2.002	2.12	2.32	2.6	9.5
0.64	0.83	0.993	1.02	1.21	1.4	2.003	2.13	2.33	2.7	
0.65	0.84	0.994	1.03	1.22	1.41	2.004	2.14	2.34	2.8	
0.66	0.85	0.995	1.04	1.23	1.42	2.005	2.15	2.35	2.9	
0.67	0.86	0.996	1.05	1.24	1.43	2.006	2.16	2.36	3	
0.68	0.87	0.997	1.06	1.25	1.44	2.007	2.17	2.37	3.5	

SERIES 514 STEEL INDIVIDUAL GAUGE BLOCK (≥10MM)

CUSTOM-MADE
other sizes are available upon request

Certificate

- Made of steel
- Meet ISO 3650
- With manufacturer inspection certificate
- Code explanation

514-□□□-□X
→ 0: grade0
→ 1: grade1
→ 2: grade2



514-004-1X

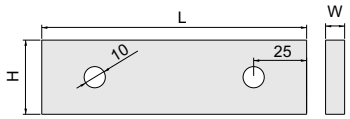

With hole (size≥125mm)

Size:

Size (L)	W	H
0.5mm≤L≤10mm	9mm	30mm
L>10mm	9mm	35mm

Code	Size(mm)
514-100-0X	10
514-103-0X	10.3
514-105-0X	10.5
514-110-0X	11
514-115-0X	11.5
514-120-0X	12
514-125-0X	12.5
514-129-0X	12.9
514-130-0X	13
514-135-0X	13.5
514-140-0X	14
514-145-0X	14.5
514-150-0X	15

Code	Size(mm)
514-155-0X	15.5
514-160-0X	16
514-165-0X	16.5
514-170-0X	17
514-175-0X	17.5
514-176-0X	17.6
514-180-0X	18
514-185-0X	18.5
514-190-0X	19
514-195-0X	19.5
514-200-0X	20
514-202-0X	20.2
514-205-0X	20.5

Code	Size(mm)
514-210-0X	21
514-215-0X	21.5
514-220-0X	22
514-225-0X	22.5
514-228-0X	22.8
514-230-0X	23
514-235-0X	23.5
514-240-0X	24
514-245-0X	24.5
514-250-0X	25
514-300-0X	30
514-350-0X	35
514-400-0X	40

Code	Size(mm)
514-413-0X	41.3
514-450-0X	45
514-500-0X	50
514-600-0X	60
514-700-0X	70
514-750-0X	75
514-800-0X	80
514-900-0X	90
514-004-1X	100
514-005-1X	125
514-006-1X	150
514-007-1X	175
514-008-1X	200

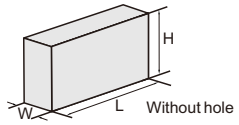

Without hole

Code	Size(mm)
514-010-1X	250
514-012-1X	300
514-016-1X	400
514-020-1X	500
514-024-1X	600
514-028-1X	700
514-030-1X	750
514-032-1X	800
514-036-1X	900
514-040-1X	1000

SERIES 514 INDIVIDUAL STEEL GAUGE BLOCKS

Certificate

- Made of alloy steel
- Meet ASME B89.1.9
- With manufacturer inspection certificate
- Code explanation

514-□□□-□XI
→ 0: grade0
→ 1: grade1
→ 2: grade2



514-000-4XI

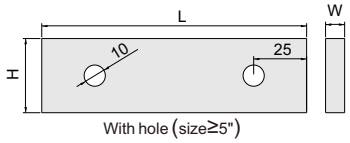

With hole (size≥5")

Size:

Size (L)	W	H
.02"≤L≤.394"	.354"	1.181"
L>.394"	.354"	1.378"

Example:

Code	Grade	Size (L)
514-000-10I	0	1"
514-000-11I	1	1"
514-000-12I	2	1"

Code	Size(L)
514-000-1XI	1"
514-000-2XI	2"
514-000-3XI	3"
514-000-4XI	4"
514-000-5XI	5"
514-000-6XI	6"

Code	Size(L)
514-000-7XI	7"
514-000-8XI	8"
514-010-0XI	10"
514-012-0XI	12"
514-016-0XI	16"
514-020-0XI	20"

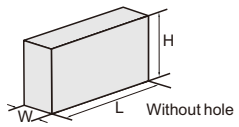

Without hole

SERIES 517 GAUGE BLOCK SET FOR CALIPER INSPECTION

Certificate

- For checking calipers accuracy
- With ring gauges
- Meet ISO 3650
- Gauge blocks are made of alloy steel
- With manufacturer inspection certificate



517-005-01

Code	Guage block allocation	Quantity	Grade	Ring gauge
517-005-01	30, 41.3, 131.4mm	5pcs	1	Ø4,Ø25mm
517-006-01	30, 41.3, 131.4, 243.5mm	6pcs	1	Ø4,Ø25mm

SERIES 517 GAUGE BLOCK SET FOR CALIPER INSPECTION

Certificate

- For checking calipers accuracy
- Meet ISO 3650
- Gauge blocks are made of alloy steel
- With manufacturer inspection certificate



517-012-01

Code	Guage block allocation	Quantity	For micrometers	Grade
517-008-11	10, 20, 20, 51.2, 121.5, 191.8mm	6pcs	0-200mm	0
517-008-12				1
517-008-13				2
517-012-01	10, 20, 20, 41.2, 51.2, 81.5, 101.2, 121.5, 121.8, 191.8, 201.5, 291.8mm	12pcs	0-300mm	0
517-012-02				1
517-012-03				2

SERIES 518 GAUGE BLOCK SET FOR MICROMETER INSPECTION

Certificate

- For checking micrometers accuracy
- With optical parallel
- Grade 0
- Meet ISO 3650
- With manufacturer inspection certificate



518-001-03

Measure



Code	Quantity	For micrometers	Material	Block allocation
518-001-02	11pcs	0-25mm	ceramic	2.5, 5.1, 7.7, 10.3, 12,9, 15, 17.6, 20.2, 22.8, 25mm
518-001-03	11pcs	0-25mm	alloy steel	2.5, 5.1, 7.7, 10.3, 12,9, 15, 17.6, 20.2, 22.8, 25mm

SERIES 518 GAUGE BLOCK SET FOR MICROMETER INSPECTION

Certificate

- For checking micrometers accuracy
- Meet ISO 3650
- With manufacturer inspection certificate



518-001-01

Grade 0

Code	Quantity	For micrometers	Material	Block allocation
518-001-01	10pcs	0-25mm	alloy steel	2.5, 5.1, 7.7, 10.3, 12,9, 15, 17.6, 20.2, 22.8, 25mm
518-002-01	11pcs	25-50mm	alloy steel	25, 27.5, 30.1, 32.7, 35.3, 37.9, 40, 42.6, 45.2, 47.8, 50mm
518-003-01	11pcs	50-75mm	alloy steel	50, 52.5, 55.1, 57.7, 60.3, 62.9, 65, 67.6, 70.2, 72.8, 75mm
518-004-01	11pcs	75-100mm	alloy steel	75, 77.5, 80.1, 82.7, 85.3, 87.9, 90, 92.6, 95.2, 97.8, 100mm

Grade 1

Code	Quantity	For micrometers	Material	Block allocation
518-001-11	10pcs	0-25mm	alloy steel	2.5, 5.1, 7.7, 10.3, 12,9, 15, 17.6, 20.2, 22.8, 25mm
518-002-11	11pcs	25-50mm	alloy steel	25, 27.5, 30.1, 32.7, 35.3, 37.9, 40, 42.6, 45.2, 47.8, 50mm
518-003-11	11pcs	50-75mm	alloy steel	50, 52.5, 55.1, 57.7, 60.3, 62.9, 65, 67.6, 70.2, 72.8, 75mm
518-004-11	11pcs	75-100mm	alloy steel	75, 77.5, 80.1, 82.7, 85.3, 87.9, 90, 92.6, 95.2, 97.8, 100mm

518 GAUGE BLOCK SET FOR MICROMETER INSPECTION

Certificate

- Meet ISO3650
- Grade 0
- With manufacturer inspection certificate



Code	Quantity	Applicable micrometer	Material	Gauge blocks included in set
518-104-01	20pcs	0-100mm	alloy steel	5.12mm, 10.24mm, 15.36mm, 21.5mm, 25mm, 30.12mm, 35.24mm, 40.36mm, 46.5mm, 50mm, 55.12mm, 60.24mm, 65.36mm, 71.5mm, 75mm, 80.12mm, 85.24mm, 90.36mm, 96.5mm, 100mm

508 GAUGE BLOCK SET FOR MICROMETER INSPECTION

- Use to check the accuracy of micrometer with series 518 gauge block set



Application



Code	Applicable micrometer
508-001-00	0-25mm

519 GAUGE BLOCK ACCESSORIES

- To expand gage block applications



Code	Total quantity	Accessory allocation
519-016-01	**17pcs**	3pcs holder (50mm, 100mm, 200mm) 6pcs half round jaw (2mm, 5mm, 10mm, 2pcs each) 1pc holder base, 2pcs 100mm plain jaws, 1pc scriber point, 1pc center point, 2pcs triangular straight edge jaw 60mm 1pc 100mm straight edge

519 GAUGE BLOCK ACCESSORIES



Code	Remark	Accessory allocation
519-016-01H	16pcs	4pcs holder(0-50mm, 50-100mm, 100-200mm, 200-300mm); 1pc base; 1pair plain jaw; 1pc parallel jaw; 3pairs half round jaw(2.5mm, 5mm, 6mm); 1pc scriber; 1pc center point

SERIES 520 GAUGE BLOCK ACCESSORIES

Code	Name	Clamping range (L)
520-002-11	holder	0-50mm
520-004-11	holder	50-100mm
520-008-11	holder	100-200mm
520-012-11	holder	200-300mm
520-016-11	holder	300-400mm
520-020-11	holder	400-500mm



unit: mm **520-012-11**

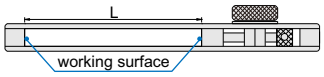

Code	Name
520-100-11	base



unit: mm

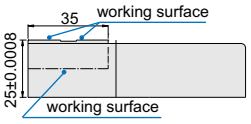

Code	Name	Size	Material
520-200-11	half round jaw	2mm	carbide
520-201-11	half round jaw	5mm	carbide
520-202-11	half round jaw	10mm	carbide



supplied a pair

unit: mm

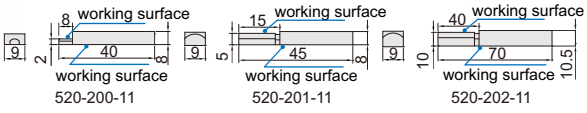

Code	Name	Material
520-300-11	plain jaw	carbide



supplied a pair

unit: mm

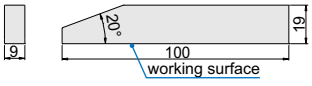

Code	Name	Material
520-400-11	scriber	carbide



unit: mm

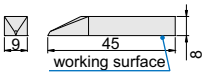

Code	Name	Tip Material
520-500-11	center point	carbide



unit: mm

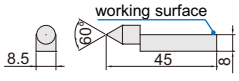

Application



(plain jaw+holder)
set zero

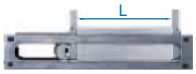

(half round jaw+holder) set a standard inside length L



(half round jaw+holder)
measure inside diameter



(base+holder+scriber)
measure height or scribe



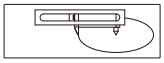

(scriber+centre point+holder)
scribe circle

510 GAUGE BLOCK HOLDER

- For gauge blocks over 100mm with clamping holes
- Optional accessory: gauge block holder accessory, gauge block accessory

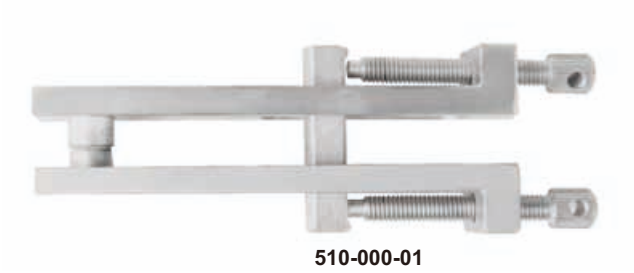

510-000-01

Application

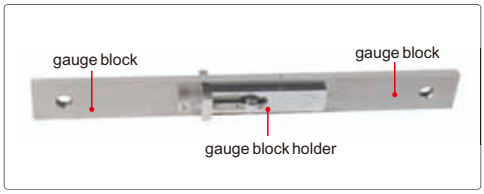

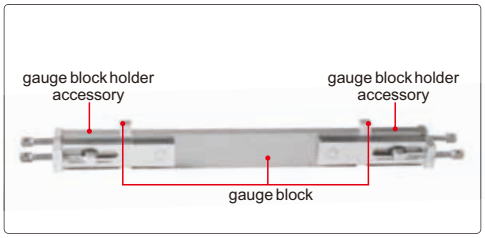

Code	Include
510-302-01	510-000-01 (3 set) 510-000-02 (1pairs)

unit: mm

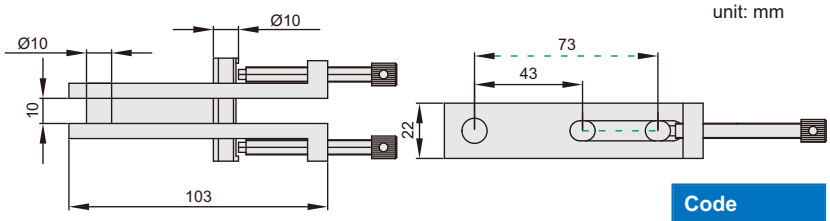

Code
510-000-01

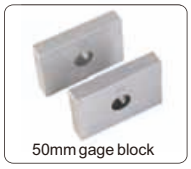

unit: mm

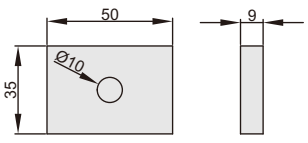

510-000-02

Code
510-000-02

SERIES 561 CHECK MASTER

Certificate

- For checking the accuracy of measuring tools like calipers, height gage and so on
- Can be used in vertical and horizontal orientation
- With manufacturer inspection certificate



561-024-01

unit: mm

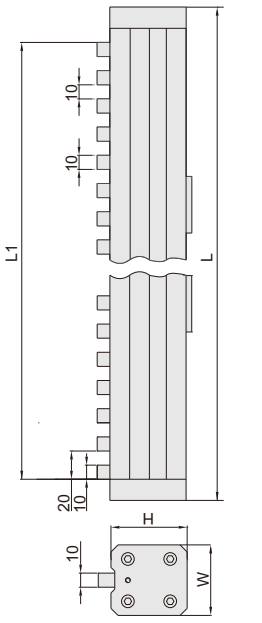

Code	Range	Parallelism of blocks	Accuracy	W	H	L1	L
561-012-01	300mm	1.2μm	±2.5μm	35	32	310	350
561-018-01	450mm	1.5μm	±3.5μm	42	50	470	510
561-024-01	600mm	1.5μm	±3.5μm	42	50	610	650

SERIES 560 CALIPER/HEIGHT GAUGE CHECKERS

Certificate

- To check calipers and height gages
- Constructed with steel gage blocks
- With manufacturer inspection certificate

horizontal use



560-024-01

vertical use



unit: mm

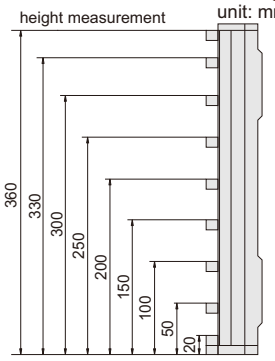

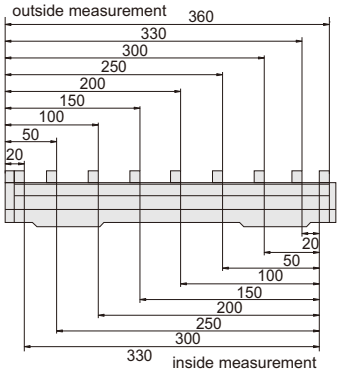

560-012-01

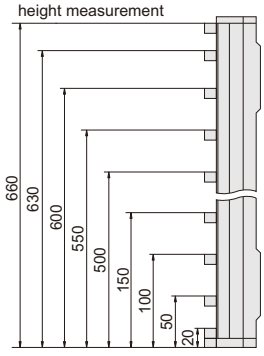

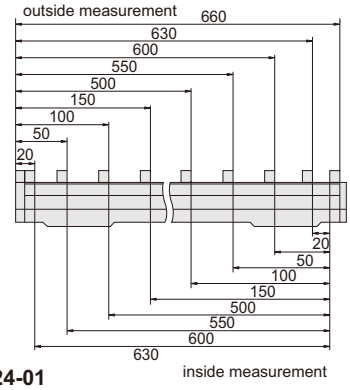

560-024-01

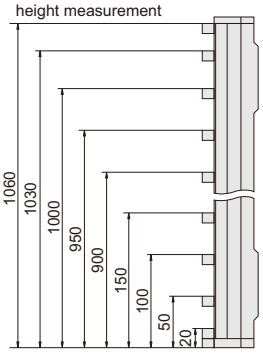

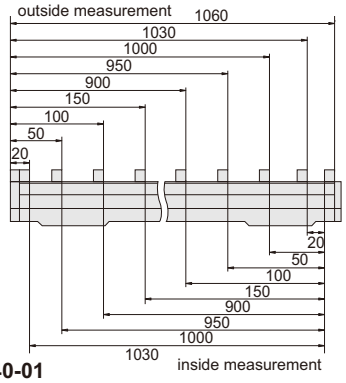

560-040-01

Check upper jaws of calipers



Check lower jaws of calipers



Check height gage



Code	Size	Range of inside measurement	Range of outside measurement	Range of height measurement	Accuracy
560-012-01	0-300mm	20, 50, 100, 150, 200, 250, 300, 330mm	20, 50, 100, 150, 200, 250, 300, 330, 360mm	20, 50, 100, 150, 200, 250, 300, 330, 360mm	±3μm
560-024-01	0-600mm	20, 50, 100, 150, 200, 250, 300, 350, 400, 450, 500, 550, 600, 630mm	20, 50, 100, 150, 200, 250, 300, 350, 400, 450, 500, 550, 600, 630, 660mm	20, 50, 100, 150, 200, 250, 300, 350, 400, 450, 500, 550, 600, 630, 660mm	±5μm
560-040-01	0-1000mm	20, 50, 100, 150, 200, 250, 300, 350, 400, 450, 500, 550, 600, 650, 700, 750, 800, 850, 900, 950, 1000, 1030mm	20, 50, 100, 150, 200, 250, 300, 350, 400, 450, 500, 550, 600, 650, 700, 750, 800, 850, 900, 950, 1000, 1030, 1060mm	20, 50, 100, 150, 200, 250, 300, 350, 400, 450, 500, 550, 600, 650, 700, 750, 800, 850, 900, 950, 1000, 1030, 1060mm	±7μm

SERIES 570 ANGLE GAUGE BLOCK SET

Certificate

- Accuracy: ±2"
- To inspect protractor, taper gage, index plate, index head and goniometer.can also be used to set angle
- Made of special alloy steel, hardness HRC64, high stability, wear resistanceand easy combination
- Can be combined to any angle with interval 6 seconds after combination(6", 12", 18", ... , 360)
- With manufacturer inspection certificate



570-015-01

Code	Angle	Total quantity
570-013-01	1°, 3°, 9°, 27°, 41°, 1', 3', 9', 27', 6", 18", 30", 90°/90°/90°/90°	13pcs
570-015-01	1°, 3°, 5°, 15°, 30°, 45°, 1', 3', 5', 20', 30', 6", 12", 30", 90°/90°/90°/90°	15pcs

571 ANGLE GAUGE BLOCK SET

Certificate



571-007-01

- For angle comparison
- One angle can be as used in triangle blocks four angles can be as used in rectangle blocks
- With manufacturer inspection certificate

Code	Angle	Blocks per set	Accuracy	Sharp
571-007-01	15°10', 30°20', 45°30', 50°, 60°40', 75°50', 90°	7	±10"	triangle/rectangle

572 ANGLE BLOCK SET

- For angle set-up in tooling, production and inspection
- Accuracy of angle: ±9 seconds
- Made of alloy steel
- Hardness HRC60±2

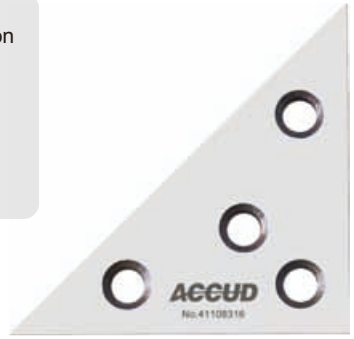



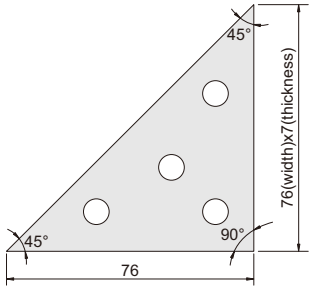

unit: mm

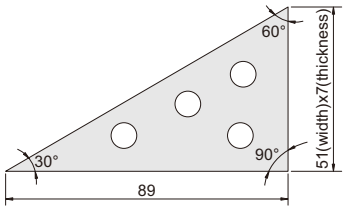

Code	Angle plates included	Angle
572-004-12	2	45°, 45°, 90°
		30°, 60°, 90°

SERIES 522 INDIVIDUAL PIN GAUGE

CUSTOM-MADE
Standard size above 40mm are available upon request

- Accuracy:
  ±1μm (range:0.1-13mm)
  ±2μm (range:13-40mm)
- Made of alloy steel
- Hardness HRC62-65
- Code explanation:

522-□□□□□-2

diameter



522-06933-2

unit: mm

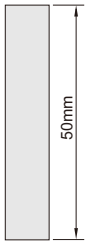

Package



Example:

Code	Size(mm)	Accuracy
522-00125-2	0.125	±1μm
522-09125-2	9.125	±1μm
522-19125-2	19.125	±2μm

522 INDIVIDUAL CARBIDE PIN GAUGE

CUSTOM-MADE
Size between 13 to 30mm, are available upon request

- Supplied diameter from 0.3 to 30mm,
- Accuracy:
  ±1μm (range:0.3-15mm)
  ±2μm (range:15-30mm)
- Carbide material
- Hardness HRA90-90.5
- Length 50mm
- Code explanation:

522-□□□□□-2T
diameter



522-06000-2T

unit: mm

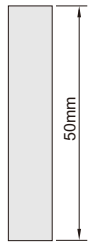

Package



Example:

Code	Size(mm)	Accuracy
522-10000-2T	10	±1μm

SERIES 528 INDIVIDUAL CERAMIC PIN GAUGE

- Meet DIN2269, grade 1
- Diameter range: 01.000-10.000mm
- Diameter accuracy: ±1μm
- Made of ceramic, extremely wear resistance, corrosion resistance and dimensional stability
- Code explanation:

528-□□□□□-1
diameter



528-10000-1

unit: mm

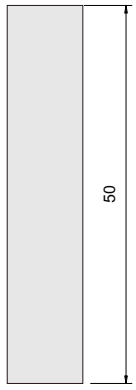

Example:

Code	Size(mm)
528-05000-1	5
528-10000-1	10

SERIES 521 PIN GAUGE HANDLE

- Supplied with wrench for installing pin gauges
- Clamping bushes are made of brass



handle

Before assemble

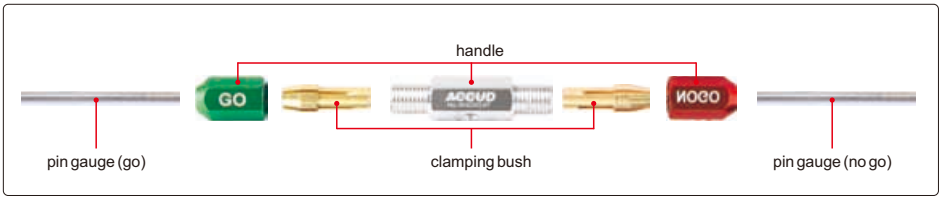

After assemble



Code	Applicable pin gauge diameter
521-001-11	0.2-1.0mm
521-002-11	1.0-2.0mm
521-003-11	2.0-3.0mm
521-004-11	3.0-4.0mm
521-005-11	4.0-5.0mm
521-006-11	5.0-6.0mm

Code	Applicable pin gauge diameter
521-007-11	6.0-7.0mm
521-008-11	7.0-8.0mm
521-009-11	8.0-9.0mm
521-010-11	9.0-10.0mm
521-011-11	10.0-11.0mm
521-012-11	11.0-12.0mm

Code	Applicable pin gauge diameter
521-013-11	12.0-13.0mm
521-014-11	13.0-14.0mm
521-015-11	14.0-15.0mm
521-016-11	15.0-16.0mm
521-017-11	16.0-17.0mm
521-018-11	17.0-18.0mm

Code	Applicable pin gauge diameter
521-019-11	18.0-19.0mm
521-020-11	19.0-20.0mm
521-021-11	20.0-21.0mm
521-022-11	21.0-22.0mm

SERIES 523 CARBIDE PIN GAUGE SET

- Meet DIN2269, grade 1
- Made of carbide
- Hardness HRA90-90.5
- Diameter accuracy:±1μm



523-1000-51T



523-300-101T

Aluminum box

Code	Diameter(mm)	Step	Quantity
523-1000-51T	10.00-10.50	0.01mm	51
523-1050-51T	10.50-11.00	0.01mm	51
523-1100-51T	11.00-11.50	0.01mm	51
523-1150-51T	11.50-12.00	0.01mm	51
523-1200-51T	12.00-12.50	0.01mm	51
523-1250-51T	12.50-13.00	0.01mm	51
523-1300-51T	13.00-13.50	0.01mm	51
523-1350-51T	13.50-14.00	0.01mm	51
523-1400-51T	14.00-14.50	0.01mm	51
523-1450-51T	14.50-15.00	0.01mm	51

Blow mould case

Code	Diameter(mm)	Step	Quantity
523-100-091T	0. 10-1.00	0.01mm	91
523-200-101T	1.00-2.00	0.01mm	101
523-300-101T	2.00-3.00	0.01mm	101
523-400-101T	3.00-4.00	0.01mm	101
523-500-101T	4.00-5.00	0.01mm	101
523-600-101T	5.00-6.00	0.01mm	101
523-700-101T	6.00-7.00	0.01mm	101
523-800-101T	7.00-8.00	0.01mm	101
523-900-101T	8.00-9.00	0.01mm	101
523-1000-101T	9.00-10.00	0.01mm	101

SERIES 523 PIN GAUGE SET

- Made of alloy steel
- Hardness HRC62-65
- Accuracy:
  ±1μm (range:0.1-13mm)
  ±2μm (range:13-40mm)



523-650-51



523-300-101

Blow mould case

Code	Diameter(mm)	Step	Quantity
523-100-091	0.1-1.00	0.01mm	91
523-200-101	1.00-2.00	0.01mm	101
523-300-101	2.00-3.00	0.01mm	101
523-400-101	3.00-4.00	0.01mm	101
523-500-101	4.00-5.00	0.01mm	101
523-600-101	5.00-6.00	0.01mm	101
523-700-101	6.00-7.00	0.01mm	101
523-800-101	7.00-8.00	0.01mm	101
523-900-101	8.00-9.00	0.01mm	101
523-1000-101	9.00-10.00	0.01mm	101

Blow mould case

Code	Diameter(mm)	Step	Quantity
523-0110-100	0.1-10.00	0.1mm	100

Aluminum box

Code	Diameter(mm)	Step	Quantity
523-500-41	1.0-5.0	0.1mm	41
523-500-51	5.0-10.0	0.1mm	51
523-1000-01	10.0-15.0	0.1mm	51
523-1500-01	15.0-20.0	0.1mm	51

Aluminum box

Code	Diameter(mm)	Step	Quantity
523-010-41	0.10-0.50	0.01mm	41
523-020-31	0.20-0.50	0.01mm	31
523-050-51	0.50-1.00	0.01mm	51
523-100-51	1.00-1.50	0.01mm	51
523-150-51	1.50-2.00	0.01mm	51
523-200-51	2.00-2.50	0.01mm	51
523-250-51	2.50-3.00	0.01mm	51
523-300-51	3.00-3.50	0.01mm	51
523-350-51	3.50-4.00	0.01mm	51
523-400-51	4.00-4.50	0.01mm	51
523-450-51	4.50-5.00	0.01mm	51
523-500-01	5.00-5.50	0.01mm	51
523-550-51	5.50-6.00	0.01mm	51
523-600-51	6.00-6.50	0.01mm	51
523-650-51	6.50-7.00	0.01mm	51
523-700-51	7.00-7.50	0.01mm	51
523-750-51	7.50-8.00	0.01mm	51
523-800-51	8.00-8.50	0.01mm	51
523-850-51	8.50-9.00	0.01mm	51
523-900-51	9.00-9.50	0.01mm	51
523-950-51	9.50-10.00	0.01mm	51

Aluminum box

Code	Diameter(mm)	Step	Quantity
523-1000-51	10.00-10.50	0.01mm	51
523-1050-51	10.50-11.00	0.01mm	51
523-1100-51	11.00-11.50	0.01mm	51
523-1150-51	11.50-12.00	0.01mm	51
523-1200-51	12.00-12.50	0.01mm	51
523-1250-51	12.50-13.00	0.01mm	51
523-1300-51	13.00-13.50	0.01mm	51
523-1350-51	13.50-14.00	0.01mm	51
523-1400-51	14.00-14.50	0.01mm	51
523-1450-51	14.50-15.00	0.01mm	51
523-1500-51	15.00-15.50	0.01mm	51
523-1550-51	15.50-16.00	0.01mm	51
523-1600-51	16.00-16.50	0.01mm	51
523-1650-51	16.50-17.00	0.01mm	51
523-1700-51	17.00-17.50	0.01mm	51
523-1750-51	17.50-18.00	0.01mm	51
523-1800-51	18.00-18.50	0.01mm	51
523-1850-51	18.50-19.00	0.01mm	51
523-1900-51	19.00-19.50	0.01mm	51
523-1950-51	19.50-20.00	0.01mm	51

SERIES 523 PIN GAUGE SET

- Made of alloy steel
- Hardness HRC62-65
- Accuracy: ±2μm



523-650-51D2



523-300-101D2

Blow mould case

Code	Diameter(mm)	Step	Quantity
523-200-101D2	1.00-2.00	0.01mm	101
523-300-101D2	2.00-3.00	0.01mm	101
523-400-101D2	3.00-4.00	0.01mm	101
523-500-101D2	4.00-5.00	0.01mm	101
523-600-101D2	5.00-6.00	0.01mm	101
523-700-101D2	6.00-7.00	0.01mm	101
523-800-101D2	7.00-8.00	0.01mm	101
523-900-101D2	8.00-9.00	0.01mm	101
523-1000-101D2	9.00-10.00	0.01mm	101

Aluminum box

Code	Diameter(mm)	Step	Quantity
523-050-51D2	0.50-1.00	0.01mm	51
523-100-51D2	1.00-1.50	0.01mm	51
523-150-51D2	1.50-2.00	0.01mm	51
523-200-51D2	2.00-2.50	0.01mm	51
523-250-51D2	2.50-3.00	0.01mm	51
523-300-51D2	3.00-3.50	0.01mm	51
523-350-51D2	3.50-4.00	0.01mm	51
523-400-51D2	4.00-4.50	0.01mm	51
523-450-51D2	4.50-5.00	0.01mm	51
523-500-01D2	5.00-5.50	0.01mm	51
523-550-51D2	5.50-6.00	0.01mm	51
523-600-51D2	6.00-6.50	0.01mm	51
523-650-51D2	6.50-7.00	0.01mm	51
523-700-51D2	7.00-7.50	0.01mm	51
523-750-51D2	7.50-8.00	0.01mm	51
523-800-51D2	8.00-8.50	0.01mm	51
523-850-51D2	8.50-9.00	0.01mm	51
523-900-51D2	9.00-9.50	0.01mm	51
523-950-51D2	9.50-10.00	0.01mm	51

SERIES 528 CERAMIC PIN GAUGE SET



528-0650-51



528-0300-101

- Meet DIN2269, grade 1
- Diameter range: 1.00-10.00mm
- Diameter accuracy: ±1μm
- Made of ceramic, extremely wear resistance, corrosion resistance and dimensional stability

Aluminum box

Code	Diameter(mm)	Step	Quantity
528-0150-51	1.00-1.50	0.01mm	51
528-0200-51	1.50-2.00	0.01mm	51
528-0250-51	2.00-2.50	0.01mm	51
528-0300-51	2.50-3.00	0.01mm	51
528-0350-51	3.00-3.50	0.01mm	51
528-0400-51	3.50-4.00	0.01mm	51
528-0450-51	4.00-4.50	0.01mm	51
528-0500-51	4.50-5.00	0.01mm	51
528-0550-51	5.00-5.50	0.01mm	51
528-0600-51	5.50-6.00	0.01mm	51
528-0650-51	6.00-6.50	0.01mm	51
528-0700-51	6.50-7.00	0.01mm	51
528-0750-51	7.00-7.50	0.01mm	51
528-0800-51	7.50-8.00	0.01mm	51
528-0850-51	8.00-8.50	0.01mm	51
528-0900-51	8.50-9.00	0.01mm	51
528-0950-51	9.00-9.50	0.01mm	51
528-1000-51	9.50-10.00	0.01mm	51

Blow mould case

Code	Diameter(mm)	Step	Quantity
528-0200-101	1.00-2.00	0.01mm	101
528-0300-101	2.00-3.00	0.01mm	101
528-0400-101	3.00-4.00	0.01mm	101
528-0500-101	4.00-5.00	0.01mm	101
528-0600-101	5.00-6.00	0.01mm	101
528-0700-101	6.00-7.00	0.01mm	101
528-0800-101	7.00-8.00	0.01mm	101
528-0900-101	8.00-9.00	0.01mm	101
528-1000-101	9.00-10.00	0.01mm	101

Code	Diameter(mm)	Step	Quantity
528-0105-41	1.00-5.00	0.1mm	41
528-0510-51	5.00-10.00	0.1mm	51
528-0110-91	1.00-10.00	0.1mm	91

SERIES 524 BOX FOR PIN GAUGE SET

- For containing pin gauges



524-001-01



524-101-01

Aluminum box

Code	Gauge range	Max. packed QTY
524-001-01	0.10-10mm	51
524-001-02	10-13mm	72
524-001-03	13-20mm	50
524-001-04	20-34mm	32

Blow mould case

Code	Gauge range	Max. packed QTY
524-101-01	0.10-10mm	101

526 STEEL BALL SET

Certificate

- To measure diameter and angle of taper holes
- Each size has a pair of steel ball
- Material: tool steel
- Hardness: HRC63
- Diameter accuracy: ±2μm
- Roundness: 0.6μm



Calculate angle (α) and diameter (Dmax) according to the ball diameter (D, d), height (A) and depth(B)

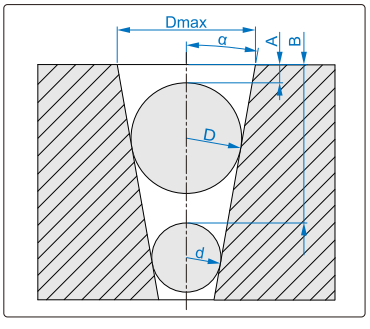

Code	Steel balls per set	Diameter(mm)
526-025-01	25 pairs	1, 2, 3, 4, 5, 6, 7, 8, 9, 10, 11, 12, 13, 14, 15, 16, 17, 18, 19, 20, 21, 22, 23, 24, 25

SERIES 525 MASTER SETTING DISC

CUSTOM-MADE
other sizes are available upon request

- Hardness: HRC60-62
- Conforms to standard ASME B89.1.5



525-020-01

Diameter	Supplied difference	Roundness and conicity
3-21mm	±0.8μm	0.5μm
21-30mm	±0.8μm	0.7μm
30-40mm	±1.1μm	0.7μm
40-65mm	±1.5μm	1.0μm

Diameter	Supplied difference	Roundness and conicity
65-110mm	±1.9μm	1.2μm
110-120mm	±1.9μm	1.6μm
120-130mm	±2.4μm	1.6μm

Code	Size(mm)
525-003-01	Ø3
525-004-01	Ø4
525-005-01	Ø5
525-006-01	Ø6
525-007-01	Ø7
525-008-01	Ø8
525-009-01	Ø9
525-010-01	Ø10
525-011-01	Ø11
525-012-01	Ø12
525-013-01	Ø13
525-014-01	Ø14
525-015-01	Ø15

Code	Size(mm)
525-016-01	Ø16
525-017-01	Ø17
525-018-01	Ø18
525-019-01	Ø19
525-020-01	Ø20
525-021-01	Ø21
525-022-01	Ø22
525-023-01	Ø23
525-024-01	Ø24
525-025-01	Ø25
525-026-01	Ø26
525-027-01	Ø27
525-028-01	Ø28

Code	Size(mm)
525-029-01	Ø29
525-030-01	Ø30
525-031-01	Ø31
525-032-01	Ø32
525-033-01	Ø33
525-034-01	Ø34
525-035-01	Ø35
525-036-01	Ø36
525-037-01	Ø37
525-038-01	Ø38
525-039-01	Ø39
525-040-01	Ø40
525-041-01	Ø41

Code	Size(mm)
525-042-01	Ø42
525-043-01	Ø43
525-044-01	Ø44
525-045-01	Ø45
525-046-01	Ø46
525-047-01	Ø47
525-048-01	Ø48
525-049-01	Ø49
525-050-01	Ø50
525-055-01	Ø55
525-060-01	Ø60
525-065-01	Ø65
525-070-01	Ø70

Code	Size(mm)
525-075-01	Ø75
525-080-01	Ø80
525-085-01	Ø85
525-090-01	Ø90
525-095-01	Ø95
525-100-01	Ø100
525-105-01	Ø105
525-110-01	Ø110
525-115-01	Ø115
525-120-01	Ø120
525-125-01	Ø125
525-130-01	Ø130

SERIES 529 THREE WIRE MEASURING UNITS

- Made of alloy steel
- One unit includes 3pcs same size
- Hardness HRC60-62
- Accuracy:
  ±0.25μm (grade 0), ±0.5μm (grade 1)
- Roundness:
  0.25μm (grade 0), 0.5μm (grade 1)
- Code explanation

529-□□□□-0X
→0: grade0
→1: grade1



529-4773-01
unit: mm

d≤0. 572mm

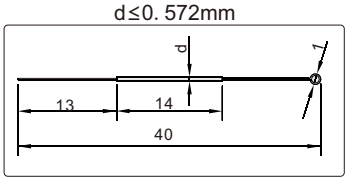

0. 572mm< d< 1. 591mm

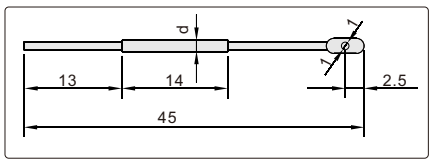

d≥1. 591mm

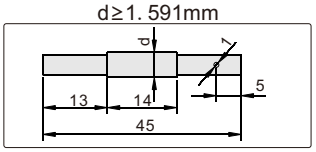

Example:

Code	Size(mm)	Grade
529-2886-00	2.886	0
529-2886-01	2.886	1

Supplied all 55 size as a set

Code	Quantity	Grade
529-055-00	55×3pcs	0
529-055-01	55×3pcs	1

Supplied 55 different size, unit:mm

0.118	0.260	0.572	1.302	2.020	2.886	3.580	4.773
0.142	0.291	0.724	1.441	2.050	3.106	3.666	5.150
0.170	0.343	0.796	1.553	2.071	3.177	4.091	5.176
0.185	0.402	0.866	1.591	2.217	3.287	4.120	5.493
0.201	0.433	1.008	1.732	2.311	3.310	4.141	6.212
0.232	0.461	1.047	1.833	2.595	3.468	4.211	6.585
0.250	0.511	1.157	1.883	2.866	3.550	4.400	

SERIES 531 SETTING RING

CUSTOM-MADE
other sizes are available upon request

- For inside micrometer and bore gage setting
- The size marked on the setting ring is checked at the direction of the marking line
- Size difference (difference between the ordered size and the size marked on the setting ring when supplied): For example, the ordered size is 20mm,the real size marked on the setting ring when supplied may be 20.003mm
- Standard accuracy: range Ø1-300mm
  High accuracy: range Ø2-200mm



531-040-01

Application



Roundess and taper(standard accuracy)

Diameterd	Size difference	Roundness	Cylindricity
Ø1~≤10	±3.0μm	0.5μm	1.0μm
Ø10~≤20		0.5μm	1.0μm
Ø20~≤30		0.5μm	1.0μm
Ø30~≤50		0.8μm	1.5μm
Ø50~≤80		0.8μm	1.5μm
Ø80~≤100		1.0μm	2.0μm
Ø100~≤130	±5.0μm	1.0μm	2.0μm
Ø130~≤150		1.0μm	2.0μm
Ø150~≤210		2.5μm	3.0μm
Ø210~≤250		3.5μm	4.0μm
Ø250~≤300		4.0μm	4.0μm

Roundess and taper(high accuracy)

Diameterd	Size difference	Roundness	Cylindricity
Ø2~≤10	±3.0μm	0.3μm	0.5μm
Ø10~≤50		0.4μm	0.8μm
Ø50~≤100		0.4μm	1.0μm
Ø100~≤200	±5.0μm	0.5μm	1.5μm

Standard accuracy(meet DIN2250-1:2008 type C)

Code	Size(mm)
531-001-01	Ø1
531-01D1-01	Ø1.1
531-01D2-01	Ø1.2
531-01D3-01	Ø1.3
531-01D4-01	Ø1.4
531-01D5-01	Ø1.5
531-01D75-01	Ø1.75
531-002-01	Ø2
531-02D25-01	Ø2.25
531-02D5-01	Ø2.5
531-02D75-01	Ø2.75
531-003-01	Ø3
531-004-01	Ø4
531-005-01	Ø5
531-006-01	Ø6
531-007-01	Ø7
531-008-01	Ø8
531-009-01	Ø9
531-010-01	Ø10
531-011-01	Ø11

Code	Size(mm)
531-012-01	Ø12
531-013-01	Ø13
531-014-01	Ø14
531-015-01	Ø15
531-016-01	Ø16
531-017-01	Ø17
531-018-01	Ø18
531-019-01	Ø19
531-020-01	Ø20
531-021-01	Ø21
531-022-01	Ø22
531-023-01	Ø23
531-024-01	Ø24
531-025-01	Ø25
531-026-01	Ø26
531-027-01	Ø27
531-028-01	Ø28
531-029-01	Ø29
531-030-01	Ø30
531-031-01	Ø31

Code	Size(mm)
531-032-01	Ø32
531-033-01	Ø33
531-034-01	Ø34
531-035-01	Ø35
531-036-01	Ø36
531-037-01	Ø37
531-038-01	Ø38
531-039-01	Ø39
531-040-01	Ø40
531-041-01	Ø41
531-042-01	Ø42
531-043-01	Ø43
531-044-01	Ø44
531-045-01	Ø45
531-046-01	Ø46
531-047-01	Ø47
531-048-01	Ø48
531-049-01	Ø49
531-050-01	Ø50
531-055-01	Ø55

Code	Size(mm)
531-060-01	Ø60
531-062-01	Ø62
531-065-01	Ø65
531-070-01	Ø70
531-075-01	Ø75
531-080-01	Ø80
531-085-01	Ø85
531-087-01	Ø87
531-090-01	Ø90
531-095-01	Ø95
531-100-01	Ø100
531-125-01	Ø125
531-150-01	Ø150
531-175-01	Ø175
531-200-01	Ø200
531-225-01	Ø225
531-250-01	Ø250
531-275-01	Ø275
531-300-01	Ø300

SERIES 531 SETTING RING

High accuracy

Code	Size(mm)
531-002-01D3	Ø2
531-003-01D3	Ø3
531-004-01D3	Ø4
531-005-01D3	Ø5
531-006-01D3	Ø6
531-007-01D3	Ø7
531-008-01D3	Ø8
531-009-01D3	Ø9
531-010-01D3	Ø10
531-011-01D3	Ø11
531-012-01D3	Ø12
531-013-01D3	Ø13
531-014-01D3	Ø14
531-015-01D3	Ø15
531-016-01D3	Ø16
531-017-01D3	Ø17
531-018-01D3	Ø18

Code	Size(mm)
531-019-01D3	Ø19
531-020-01D3	Ø20
531-021-01D3	Ø21
531-022-01D3	Ø22
531-023-01D3	Ø23
531-024-01D3	Ø24
531-025-01D3	Ø25
531-026-01D3	Ø26
531-027-01D3	Ø27
531-028-01D3	Ø28
531-029-01D3	Ø29
531-030-01D3	Ø30
531-031-01D3	Ø31
531-032-01D3	Ø32
531-033-01D3	Ø33
531-034-01D3	Ø34
531-035-01D3	Ø35

Code	Size(mm)
531-036-01D3	Ø36
531-037-01D3	Ø37
531-038-01D3	Ø38
531-039-01D3	Ø39
531-040-01D3	Ø40
531-041-01D3	Ø41
531-042-01D3	Ø42
531-043-01D3	Ø43
531-044-01D3	Ø44
531-045-01D3	Ø45
531-046-01D3	Ø46
531-047-01D3	Ø47
531-048-01D3	Ø48
531-049-01D3	Ø49
531-050-01D3	Ø50
531-055-01D3	Ø55
531-060-01D3	Ø60

Code	Size(mm)
531-062-01D3	Ø62
531-065-01D3	Ø65
531-070-01D3	Ø70
531-075-01D3	Ø75
531-080-01D3	Ø80
531-085-01D3	Ø85
531-087-01D3	Ø87
531-090-01D3	Ø90
531-095-01D3	Ø95
531-100-01D3	Ø100
531-125-01D3	Ø125
531-150-01D3	Ø150
531-175-01D3	Ø175
531-200-01D3	Ø200

SERIES 575 CERAMIC SETTING RING

- For zero setting of inside micrometers, three points internal micrometers and bore gages
- Size difference (difference between the ordered size and the size marked on the setting ring when supplied):
  For example, the ordered size is Ø20.15mm, the size marked on the setting ring when supplied may be Ø20.155mm
- Made of ceramic, extremely wear resistance and corrosion resistance, dimensional stability



575-028-01

unit:mm

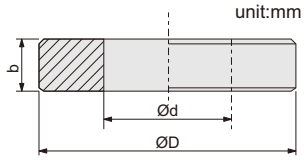

CUSTOM-MADE
Can supply custom setting rings from Ø3.00omm to Ø40.00mm, for example, Ø15.50mm

Roundess and taper (standard accuracy)

Diameter(mm)	Roundness	Taper
Ød≤30	0.5μm	1μm
30<Ød≤40	0.8μm	1.5μm

Reference size

Diameter(Ød)	Size difference
3<Ød≤5	±10μm
5<Ød≤10	±10μm
10<Ød≤15	±10μm
15<Ød≤20	±10μm
20<Ød≤25	±10μm
25<Ød≤32	±10μm
32<Ød≤40	±10μm

Code	Size(mm)
575-003-01	Ø3
575-004-01	Ø4
575-005-01	Ø5
575-006-01	Ø6
575-007-01	Ø7
575-008-01	Ø8
575-009-01	Ø9
575-010-01	Ø10

Code	Size(mm)
575-011-01	Ø11
575-012-01	Ø12
575-013-01	Ø13
575-014-01	Ø14
575-015-01	Ø15
575-016-01	Ø16
575-017-01	Ø17
575-018-01	Ø18

Code	Size(mm)
575-019-01	Ø19
575-020-01	Ø20
575-021-01	Ø21
575-022-01	Ø22
575-023-01	Ø23
575-024-01	Ø24
575-025-01	Ø25
575-026-01	Ø26

Code	Size(mm)
575-027-01	Ø27
575-028-01	Ø28
575-029-01	Ø29
575-030-01	Ø30
575-031-01	Ø31
575-032-01	Ø32
575-033-01	Ø33
575-034-01	Ø34

Code	Size(mm)
575-035-01	Ø35
575-036-01	Ø36
575-037-01	Ø37
575-038-01	Ø38
575-039-01	Ø39
575-040-01	Ø40

SERIES 541 PLAIN PLUG GAUGE

CUSTOM-MADE
other sizes are available upon request

- Grade H7
- Hardness HRC 60±2
- Standard DIN7150-2
- Supplied range from 1mm to 100mm



541-020-17



541-006-17

unit: mm

type A

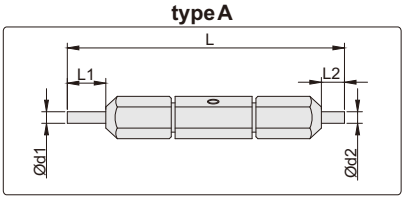

type B

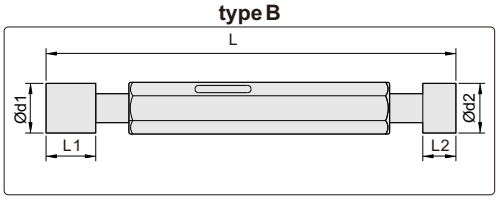

type C

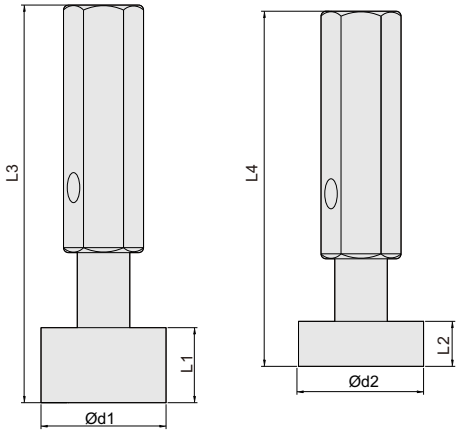

Diameter Ød (mm)	Ød1 size tolerance of Go gage (mm)	Ød2 size tolerance of Go gage (mm)	L1	L2	L	L3	L4
≥2 ≤3	+0.0010, +0.0022	+0.0088, +0.010	6.5	4.5	62		
>3 ≤6	+0.0013, +0.0027	+0.0106, +0.012	8	6	74		
>6, ≤10	+0.0015, +0.0033	+0.0132, +0.015	10	7	87		
>10, ≤14	+0.0018, +0.0038	+0.0160, +0.018	12	8	99		
>14, ≤18	+0.0018, +0.0038	+0.0160, +0.018	14	10	114		
>18, ≤24	+0.0023, +0.0046	+0.0186, +0.021	16	12	132		
>24, ≤30	+0.0023, +0.0046	+0.0186, +0.021	18	14	136		
>30, ≤40	+0.0023, +0.0055	+0.0220, +0.025	20	15	155		
>40, ≤50	+0.0023, +0.0055	+0.0220, +0.025	25	18	169		
>50, ≤65	+0.0028, +0.0064	+0.0264, +0.030	30	18		164	165
>65, ≤80	+0.0028, +0.0064	+0.0264, +0.030	35	25		169	159
>80, ≤100	+0.0032, +0.0075	+0.0308, +0.035	35	25		169	159

Code	Diameter Ød (mm)	Type
541-002-17	2	A
541-003-17	3	A
541-004-17	4	A
541-005-17	5	A
541-006-17	6	A
541-007-17	7	A
541-008-17	8	A
541-009-17	9	B
541-010-17	10	B
541-011-17	11	B
541-012-17	12	B
541-013-17	13	B
541-014-17	14	B
541-015-17	15	B
541-016-17	16	B

Code	Diameter Ød (mm)	Type
541-017-17	17	B
541-018-17	18	B
541-019-17	19	B
541-020-17	20	B
541-021-17	21	B
541-022-17	22	B
541-023-17	23	B
541-024-17	24	B
541-025-17	25	B
541-026-17	26	B
541-027-17	27	B
541-028-17	28	B
541-029-17	29	B
541-030-17	30	B
541-031-17	31	B

Code	Diameter Ød (mm)	Type
541-032-17	32	B
541-033-17	33	B
541-034-17	34	B
541-035-17	35	B
541-036-17	36	B
541-037-17	37	B
541-038-17	38	B
541-039-17	39	B
541-040-17	40	B
541-041-17	41	B
541-042-17	42	B
541-043-17	43	B
541-044-17	44	B
541-045-17	45	B
541-046-17	46	B

Code	Diameter Ød (mm)	Type
541-047-17	47	B
541-048-17	48	B
541-049-17	49	B
541-050-17	50	B
541-052-17	52	C
541-055-17	55	C
541-060-17	60	C
541-065-17	65	C
541-070-17	70	C
541-075-17	75	C
541-080-17	80	C
541-085-17	85	C
541-090-17	90	C
541-095-17	95	C
541-100-17	100	C

SERIES 541 CARBIDE PLAIN PLUG GAUGE

CUSTOM-MADE
Size between 1 to 30mm, are available upon request



541-020-17T



541-006-17T

- Grade H7
- Hardness HRC 85-89
- Standard DIN7150-2
- Supplied range from 1mm to 30mm

unit: mm

type A

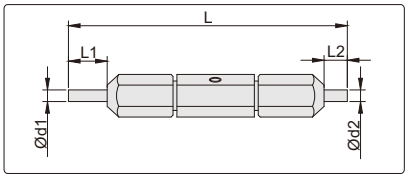

type B

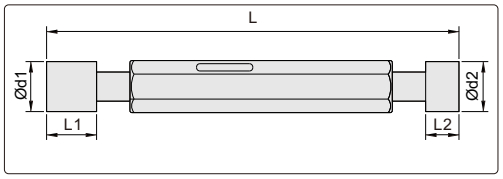

Diameter Ød (mm)	Ød1 size tolerance of Go gage (mm)	Ød2 size tolerance of Go gage (mm)	L1	L2	L
≥2 ≤3	+0.0010, +0.0022	+0.0088, +0.010	6.5	4.5	62
>3 ≤6	+0.0013 , +0.0027	+0.0106, +0.012	8	6	74
>6, ≤10	+0.0015 , +0.0033	+0.0132, +0.015	10	7	87
>10, ≤14	+0.0018 , +0.0038	+0.0160, +0.018	12	8	99
>14, ≤18	+0.0018, +0.0038	+0.0160, +0.018	14	10	114
>18, ≤24	+0.0023 , +0.0046	+0.0186, +0.021	16	12	132
>24, ≤30	+0.0023 , +0.0046	+0.0186, +0.021	18	14	136

Code	Diameter Ød (mm)	Type
541-002-17T	2	A
541-003-17T	3	A
541-004-17T	4	A
541-005-17T	5	A
541-006-17T	6	A
541-007-17T	7	A
541-008-17T	8	A
541-009-17T	9	B
541-010-17T	10	B
541-011-17T	11	B
541-012-17T	12	B
541-013-17T	13	B
541-014-17T	14	B
541-015-17T	15	B
541-016-17T	16	B

Code	Diameter Ød (mm)	Type
541-017-17T	17	B
541-018-17T	18	B
541-019-17T	19	B
541-020-17T	20	B
541-021-17T	21	B
541-022-17T	22	B
541-023-17T	23	B
541-024-17T	24	B
541-025-17T	25	B
541-026-17T	26	B
541-027-17T	27	B
541-028-17T	28	B
541-029-17T	29	B
541-030-17T	30	B

SERIES 589 LIMIT SNAP GAUGE

CUSTOM-MADE
Grade: h6, g7
Size: 1 to 250mm
are available upon request

- Grade h7
- Type A: size≤80mm;
  Type B: size>80mm
- Code explanation:

589-□□□-07

size

Type A



589-060-07

Type B



589-150-07

Example:

Code	Size(mm)	Type
589-060-07	60	A
589-070-07	70	A
589-080-07	80	A
589-100-07	100	B
589-120-07	120	B
589-150-07	150	B

SERIES 585 KEY SLOT LIMIT GAUGE

CUSTOM-MADE
Size between 3 to 50mm,
are available upon request



front side

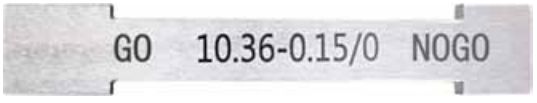

reverse side

Code
585-xxxxx-xx

SERIES 582 ADJUSTABLE SNAP GAUGE

- Used as Go/No-Go gauge by setting upper and lower limits
- Flatness of anvil: 1.5um
- Parallelism of measuring faces:
  range 0-32mm: 3um
  range 32-89mm: 4um
  range 89-300mm: 5um



582-060-01

VIDEO

unit: mm

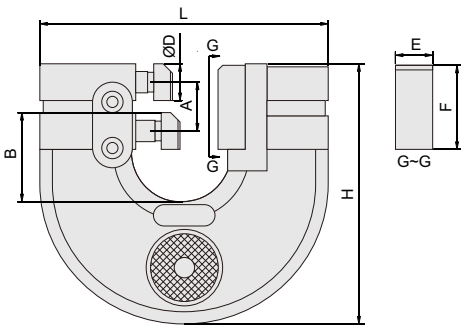

Code	Range	L	A	B	E	F	H	Ød
582-006-01	0-6mm	74	15	17.5	12.2	27.2	71.5	7
582-013-01	6-13mm	85	15	26	12.2	27.2	79.5	12.3
582-019-01	13-19mm	93	15	27	12.2	27.2	83	12.3
582-025-01	19-25mm	100	15	33.5	12.2	27.2	89.5	12.3
582-032-01	25-32mm	111	18	38.5	15.2	35.2	104	15.3
582-038-01	32-38mm	117	18	41.5	15.2	35.2	105	15.3
582-044-01	38-44mm	123	18	44.5	15.2	35.2	109	15.3
582-051-01	44-51mm	130	18	45	15.2	35.2	117	15.3
582-057-01	51-57mm	136	18	48	15.2	35.2	119	15.3
582-063-01	57-63mm	143	18	50	15.2	35.2	122	15.3
582-070-01	63-70mm	156	20	58	15.2	35.2	132	15.3
582-076-01	70-76mm	163	20	60.5	15.2	35.2	137	15.3
582-082-01	76-82mm	169	20	64.5	15.2	35.2	140	15.3
582-089-01	82-89mm	175	20	66.5	15.2	35.2	146	15.3
582-095-01	89-95mm	181	20	69.5	15.2	35.2	149	15.3
582-101-01	95-101mm	188	20	70	15.2	35.2	154	15.3
582-108-01	101-108mm	198	24	79	15.2	39.2	166	15.3
582-114-01	108-114mm	204	24	81	15.2	39.2	172	15.3
582-120-01	114-120mm	210	24	86	15.2	39.2	179	15.3
582-127-01	120-127mm	217	24	89.5	15.2	39.2	186	15.3
582-133-01	127-133mm	223	24	92.5	15.2	39.2	192	15.3
582-139-01	133-139mm	229	24	95.5	15.2	39.2	197	15.3
582-146-01	139-146mm	235	24	98.5	15.2	39.2	201	15.3
582-152-01	146-152mm	242	24	102	15.2	39.2	205	15.3
582-163-01	152-163mm	273	21.4	106.7	18.2	39.2	211	18.3
582-175-01	163-175mm	273	21.4	106.7	18.2	39.2	211	18.3
582-188-01	175-188mm	298.5	21.4	119.7	18.2	39.2	227	18.3
582-200-01	188-200mm	298.5	21.4	119.7	18.2	39.2	227	18.3
582-213-01	200-213mm	324	21.4	131.7	18.2	39.2	242	18.3
582-225-01	213-225mm	324	21.4	131.7	18.2	39.2	242	18.3
582-238-01	225-238mm	349.5	21.4	144.7	18.2	39.2	250	18.3
582-250-01	238-250mm	349.5	21.4	149	18.2	39.2	250	18.3
582-263-01	250-263mm	375.5	21.4	157.7	18.2	39.2	278	18.3
582-275-01	263-275mm	375.5	21.4	157.7	18.2	39.2	278	18.3
582-288-01	275-288mm	400	21.4	170.7	18.2	39.2	291	18.3
582-300-01	288-300mm	400	21.4	170.7	18.2	39.2	291	18.3

SERIES 532/533 THREAD RING GAUGE

CUSTOM-MADE
other sizes are available upon request

- Grade 6g
- Meet ISO1502
- Hardness HRC60-62



532-020-01



533-020-01

Individual

Code(GO)	Code(NOGO)	Size(mm)
532-002-01	533-002-01	M2x0.4
532-002-21	533-002-21	M2.2x0.45
532-002-51	533-002-51	M2.5x0.45
532-003-01	533-003-01	M3x0.5
532-003-51	533-003-51	M3.5x0.6
532-004-01	533-004-01	M4x0.7
532-005-01	533-005-01	M5x0.8
532-006-01	533-006-01	M6x1
532-008-01	533-008-01	M8x1.25
532-010-01	533-010-01	M10x1.5
532-012-01	533-012-01	M12x1.75
532-014-01	533-014-01	M14x2
532-016-01	533-016-01	M16x2

Individual

Code(GO)	Code(NOGO)	Size(mm)
532-018-01	533-018-01	M18x2.5
532-020-01	533-020-01	M20x2.5
532-022-01	533-022-01	M22x2.5
532-024-01	533-024-01	M24x3
532-027-01	533-027-01	M27x3
532-030-01	533-030-01	M30x3.5
532-033-01	533-033-01	M33x3.5
532-036-01	533-036-01	M36x4
532-042-01	533-042-01	M42x4.5
532-048-01	533-048-01	M48x5
532-052-01	533-052-01	M52x5
532-060-01	533-060-01	M60x5.5



532-312-01S7



533-312-01S7

SET

Code(GO)	Code(NOGO)	Thread plug gauges included (mm)
532-312-01S7	533-312-01S7	M3x0.5, M4x0.7, M5x0.8, M6x1, M8x1.25, M10x1.5, M12x1.75

SERIES 534/535 FINE THREAD RING GAUGE

CUSTOM-MADE
other sizes are available upon request

- Grade 6g
- Meet ISO1502
- Hardness HRC60-62



534-020-01



535-020-01

Code(GO)	Code(NOGO)	Size(mm)
534-002-01	535-002-01	M2x0.25
534-002-21	535-002-21	M2.2x0.25
534-002-51	535-002-51	M2.5x0.35
534-003-01	535-003-01	M3x0.35
534-003-51	535-003-51	M3.5x0.35
534-004-01	535-004-01	M4x0.5
534-005-01	535-005-01	M5x0.5
534-006-01	535-006-01	M6x0.5
534-006-02	535-006-02	M6x0.75
534-007-01	535-007-01	M7x0.5
534-007-02	535-007-02	M7x0.75
534-008-01	535-008-01	M8x0.5
534-008-02	535-008-02	M8x0.75
534-008-03	535-008-03	M8x1
534-009-01	535-009-01	M9x0.5
534-009-02	535-009-02	M9x0.75
534-009-03	535-009-03	M9x1
534-010-01	535-010-01	M10x0.5
534-010-02	535-010-02	M10x0.75
534-010-03	535-010-03	M10x1
534-010-04	535-010-04	M10x1.25
534-011-02	535-011-02	M11x0.75
534-011-03	535-011-03	M11x1
534-012-01	535-012-01	M12x0.5
534-012-02	535-012-02	M12x0.75
534-012-03	535-012-03	M12x1
534-012-04	535-012-04	M12x1.25
534-012-05	535-012-05	M12x1.5
534-014-01	535-014-01	M14x0.5
534-014-02	535-014-02	M14x0.75
534-014-03	535-014-03	M14x1
534-014-04	535-014-04	M14x1.25
534-014-05	535-014-05	M14x1.5
534-016-01	535-016-01	M16x0.5
534-016-02	535-016-02	M16x0.75
534-016-03	535-016-03	M16x1
534-016-04	535-016-04	M16x1.5

Code(GO)	Code(NOGO)	Size(mm)
534-018-01	535-018-01	M18x0.5
534-018-02	535-018-02	M18x0.75
534-018-03	535-018-03	M18x1
534-018-04	535-018-04	M18x1.5
534-018-05	535-018-05	M18x2
534-020-01	535-020-01	M20x0.5
534-020-02	535-020-02	M20x0.75
534-020-03	535-020-03	M20x1
534-020-04	535-020-04	M20x1.5
534-020-05	535-020-05	M20x2
534-022-01	535-022-01	M22x0.5
534-022-02	535-022-02	M22x0.75
534-022-03	535-022-03	M22x1
534-022-04	535-022-04	M22x1.5
534-022-05	535-022-05	M22x2
534-024-01	535-024-01	M24x0.75
534-024-02	535-024-02	M24x1
534-024-03	535-024-03	M24x1.5
534-024-04	535-024-04	M24x2
534-027-01	535-027-01	M27x0.75
534-027-02	535-027-02	M27x1
534-027-03	535-027-03	M27x1.5
534-027-04	535-027-04	M27x2
534-030-01	535-030-01	M30x0.75
534-030-02	535-030-02	M30x1
534-030-03	535-030-03	M30x1.5
534-030-04	535-030-04	M30x2
534-030-05	535-030-05	M30x3
534-033-01	535-033-01	M33x0.75
534-033-02	535-033-02	M33x1
534-033-03	535-033-03	M33x1.5
534-033-04	535-033-04	M33x2
534-033-05	535-033-05	M33x3
534-036-01	535-036-01	M36x1
534-036-02	535-036-02	M36x1.5
534-036-03	535-036-03	M36x2
534-036-04	535-036-04	M36x3

Code(GO)	Code(NOGO)	Size(mm)
534-039-01	535-039-01	M39x1
534-039-02	535-039-02	M39x1.5
534-039-03	535-039-03	M39x2
534-039-04	535-039-04	M39x3
534-042-01	535-042-01	M42x1
534-042-02	535-042-02	M42x1.5
534-042-03	535-042-03	M42x2
534-042-04	535-042-04	M42x3
534-042-05	535-042-05	M42x4
534-045-01	535-045-01	M45x1
534-045-02	535-045-02	M45x1.5
534-045-03	535-045-03	M45x2
534-045-04	535-045-04	M45x3
534-045-05	535-045-05	M45x4
534-048-01	535-048-01	M48x1
534-048-02	535-048-02	M48x1.5
534-048-03	535-048-03	M48x2
534-048-04	535-048-04	M48x3
534-048-05	535-048-05	M48x4
534-052-01	535-052-01	M52x1
534-052-02	535-052-02	M52x1.5
534-052-03	535-052-03	M52x2
534-052-04	535-052-04	M52x3
534-052-05	535-052-05	M52x4
534-056-01	535-056-01	M56x1
534-056-02	535-056-02	M56x1.5
534-056-03	535-056-03	M56x2
534-056-04	535-056-04	M56x3
534-056-05	535-056-05	M56x4
534-060-01	535-060-01	M60x1
534-060-02	535-060-02	M60x1.5
534-060-03	535-060-03	M60x2
534-060-04	535-060-04	M60x3
534-060-05	535-060-05	M60x4

SERIES 542 THREAD PLUG GAUGE

CUSTOM-MADE
other sizes are available upon request

- Grade 6H
- Meet ISO1502
- Hardness HRC60-62
- **Type A** for size ≤ M3, customizable flat tip; **Type B** for size > M3

Point tip



Type A

Flat tip

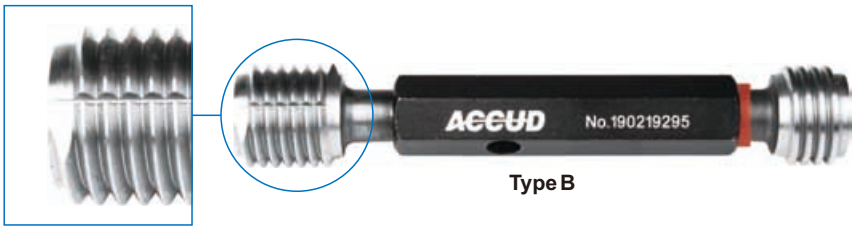

Type B

Individual

Code	Size(mm)
542-002-01	M2x0.4
542-002-21	M2.2x0.45
542-002-51	M2.5x0.45
542-003-01	M3x0.5
542-003-02	M3.5x0.6
542-004-01	M4x0.7
542-005-01	M5x0.8
542-006-01	M6x1
542-007-01	M7x1
542-008-01	M8x1.25
542-009-01	M9x1.25

Individual

Code	Size(mm)
542-010-01	M10x1.5
542-011-01	M11x1.5
542-012-01	M12x1.75
542-014-01	M14x2
542-016-01	M16x2
542-018-01	M18x2.5
542-020-01	M20x2.5
542-022-01	M22x2.5
542-024-01	M24x3
542-027-01	M27x3
542-030-01	M30x3.5

Individual

Code	Size(mm)
542-033-01	M33x3.5
542-036-01	M36x4
542-039-01	M39x4
542-042-01	M42x4.5
542-045-01	M45x4.5
542-048-01	M48x5
542-052-01	M52x5
542-056-01	M56x5.5
542-060-01	M60x5.5

SET

Code	Thread plug gauges included (mm)
542-312-01S7	M3x0.5, M4x0.7, M5x0.8, M6x1, M8x1.25, M10x1.5, M12x1.75



542-312-01S7

SERIES 543 FINE THREAD PLUG GAUGE

CUSTOM-MADE
other sizes are available upon request

- Grade 6H
- Meet ISO1502
- Hardness HRC60-62, good wear resistance
- **Type A** for size ≤ M3; customizable flat tip; **Type B** for size > M3

Point tip



Type A

Flat tip



Type B

Code	Size(mm)
543-002-01	M2x0.25
543-002-21	M2.2x0.25
543-002-31	M2.5x0.35
543-003-01	M3x0.35
543-003-02	M3.5x0.35
543-004-01	M4x0.5
543-005-01	M5x0.5
543-006-01	M6x0.5
543-006-02	M6x0.75
543-007-01	M7x0.5
543-007-02	M7x0.75
543-008-01	M8x0.5
543-008-02	M8x0.75
543-008-03	M8x1
543-009-01	M9x0.5
543-009-02	M9x0.75
543-009-03	M9x1
543-010-01	M10x0.5
543-010-02	M10x0.75
543-010-03	M10x1
543-010-04	M10x1.25
543-011-01	M11x0.5
543-011-02	M11x0.75
543-011-03	M11x1
543-012-01	M12x0.5
543-012-02	M12x0.75
543-012-03	M12x1
543-012-04	M12x1.25
543-012-05	M12x1.5
543-014-01	M14x0.5
543-014-02	M14x0.75
543-014-03	M14x1
543-014-04	M14x1.25
543-014-05	M14x1.5
543-016-01	M16x0.5
543-016-02	M16x0.75
543-016-03	M16x1

Code	Size(mm)
543-016-04	M16x1.5
543-018-01	M18x0.5
543-018-02	M18x0.75
543-018-03	M18x1
543-018-04	M18x1.5
543-018-05	M18x2
543-020-01	M20x0.5
543-020-02	M20x0.75
543-020-03	M20x1
543-020-04	M20x1.5
543-020-05	M20x2
543-022-01	M22x0.5
543-022-02	M22x0.75
543-022-03	M22x1
543-022-04	M22x1.5
543-022-05	M22x2
543-024-01	M24x0.75
543-024-02	M24x1
543-024-03	M24x1.5
543-024-04	M24x2
543-027-01	M27x0.75
543-027-02	M27x1
543-027-03	M27x1.5
543-027-04	M27x2
543-030-01	M30x0.75
543-030-02	M30x1
543-030-03	M30x1.5
543-030-04	M30x2
543-030-05	M30x3
543-033-01	M33x0.75
543-033-02	M33x1
543-033-03	M33x1.5
543-033-04	M33x2
543-033-05	M33x3
543-036-01	M36x1
543-036-02	M36x1.5
543-036-03	M36x2

Code	Size(mm)
543-036-04	M36x3
543-039-01	M39x1
543-039-02	M39x1.5
543-039-03	M39x2
543-039-04	M39x3
543-042-01	M42x1
543-042-02	M42x1.5
543-042-03	M42x2
543-042-04	M42x3
543-042-05	M42x4
543-045-01	M45x1
543-045-02	M45x1.5
543-045-03	M45x2
543-045-04	M45x3
543-045-05	M45x4
543-048-01	M48x1
543-048-02	M48x1.5
543-048-03	M48x2
543-048-04	M48x3
543-048-05	M48x4
543-052-01	M52x1
543-052-02	M52x1.5
543-052-03	M52x2
543-052-04	M52x3
543-052-05	M52x4
543-056-01	M56x1
543-056-02	M56x1.5
543-056-03	M56x2
543-056-04	M56x3
543-056-05	M56x4
543-060-01	M60x1
543-060-02	M60x1.5
543-060-03	M60x2
543-060-04	M60x3
543-060-05	M60x4

SERIES 542 CHECK PLUGS FOR METRIC THREAD RING GAUGE

CUSTOM-MADE
other sizes and grade 6h, 6e are available upon request

- Meet ISO1502
- Grade 6g
- Check thread ring gauges
- Hardness HRC60-62
- **Type A** for size ≤ M3, customizable flat tip; **Type B** for size > M3

Point tip



Type A

Flat tip

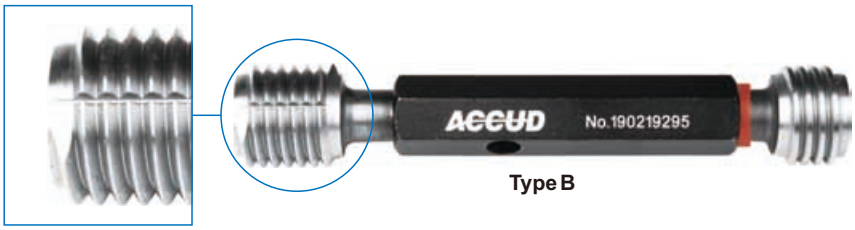

Type B

Code(XT)	Code(XZ)	Code(XS)	Code(SET)	Size(mm)
542-002-01-6g-XT	542-002-01-6g-XZ	542-002-01-6g-XS	542-002-01-6g-XSET	M2x0.4
542-002-21-6g-XT	542-002-21-6g-XZ	542-002-21-6g-XS	542-002-21-6g-XSET	M2.2x0.45
542-002-51-6g-XT	542-002-51-6g-XZ	542-002-51-6g-XS	542-002-51-6g-XSET	M2.5x0.45
542-003-01-6g-XT	542-003-01-6g-XZ	542-003-01-6g-XS	542-003-01-6g-XSET	M3x0.5
542-003-51-6g-XT	542-003-51-6g-XZ	542-003-51-6g-XS	542-003-51-6g-XSET	M3.5x0.6
542-004-01-6g-XT	542-004-01-6g-XZ	542-004-01-6g-XS	542-004-01-6g-XSET	M4x0.7
542-005-01-6g-XT	542-005-01-6g-XZ	542-005-01-6g-XS	542-005-01-6g-XSET	M5x0.8
542-006-01-6g-XT	542-006-01-6g-XZ	542-006-01-6g-XS	542-006-01-6g-XSET	M6x1
542-008-01-6g-XT	542-008-01-6g-XZ	542-008-01-6g-XS	542-008-01-6g-XSET	M8x1.25
542-010-01-6g-XT	542-010-01-6g-XZ	542-010-01-6g-XS	542-010-01-6g-XSET	M10x1.5
542-012-01-6g-XT	542-012-01-6g-XZ	542-012-01-6g-XS	542-012-01-6g-XSET	M12x1.75
542-014-01-6g-XT	542-014-01-6g-XZ	542-014-01-6g-XS	542-014-01-6g-XSET	M14x2
542-016-01-6g-XT	542-016-01-6g-XZ	542-016-01-6g-XS	542-016-01-6g-XSET	M16x2
542-018-01-6g-XT	542-018-01-6g-XZ	542-018-01-6g-XS	542-018-01-6g-XSET	M18x2.5
542-020-01-6g-XT	542-020-01-6g-XZ	542-020-01-6g-XS	542-020-01-6g-XSET	M20x2.5
542-022-01-6g-XT	542-022-01-6g-XZ	542-022-01-6g-XS	542-022-01-6g-XSET	M22x2.5
542-024-01-6g-XT	542-024-01-6g-XZ	542-024-01-6g-XS	542-024-01-6g-XSET	M24x3
542-027-01-6g-XT	542-027-01-6g-XZ	542-027-01-6g-XS	542-027-01-6g-XSET	M27x3
542-030-01-6g-XT	542-030-01-6g-XZ	542-030-01-6g-XS	542-030-01-6g-XSET	M30x3.5
542-033-01-6g-XT	542-033-01-6g-XZ	542-033-01-6g-XS	542-033-01-6g-XSET	M33x3.5
542-036-01-6g-XT	542-036-01-6g-XZ	542-036-01-6g-XS	542-036-01-6g-XSET	M36x4
542-042-01-6g-XT	542-042-01-6g-XZ	542-042-01-6g-XS	542-042-01-6g-XSET	M42x4.5
542-048-01-6g-XT	542-048-01-6g-XZ	542-048-01-6g-XS	542-048-01-6g-XSET	M48x5
542-052-01-6g-XT	542-052-01-6g-XZ	542-052-01-6g-XS	542-052-01-6g-XSET	M52x5
542-060-01-6g-XT	542-060-01-6g-XZ	542-060-01-6g-XS	542-060-01-6g-XSET	M60x5.5

SERIES 543 CHECK PLUGS FOR METRIC FINE THREAD RING GAUGE

CUSTOM-MADE
other sizes and grade 6h, 6e are available upon request

- Meet ISO1502
- Grade 6g
- Check thread ring gauges
- Hardness HRC60-62 , good wear resistance
- **Type A** for size ≤ M3; customizable flat tip; **Type B** for size > M3

Point tip



Type A

Flat tip



Type B

Code(XT)	Code(XZ)	Code(XS)	Code(SET)	Size(mm)
543-002-01-6g-XT	543-002-01-6g-XZ	543-002-01-6g-XS	543-002-01-6g-XSET	M2x0.25
543-002-21-6g-XT	543-002-21-6g-XZ	543-002-21-6g-XS	543-002-21-6g-XSET	M2.2x0.25
543-002-51-6g-XT	543-002-51-6g-XZ	543-002-51-6g-XS	543-002-51-6g-XSET	M2.5x0.35
543-003-01-6g-XT	543-003-01-6g-XZ	543-003-01-6g-XS	543-003-01-6g-XSET	M3x0.35
543-003-51-6g-XT	543-003-51-6g-XZ	543-003-51-6g-XS	543-003-51-6g-XSET	M3.5x0.35
543-004-01-6g-XT	543-004-01-6g-XZ	543-004-01-6g-XS	543-004-01-6g-XSET	M4x0.5
543-005-01-6g-XT	543-005-01-6g-XZ	543-005-01-6g-XS	543-005-01-6g-XSET	M5x0.5
543-006-01-6g-XT	543-006-01-6g-XZ	543-006-01-6g-XS	543-006-01-6g-XSET	M6x0.5
543-006-02-6g-XT	543-006-02-6g-XZ	543-006-02-6g-XS	543-006-02-6g-XSET	M6x0.75
543-007-01-6g-XT	543-007-01-6g-XZ	543-007-01-6g-XS	543-007-01-6g-XSET	M7x0.5
543-007-02-6g-XT	543-007-02-6g-XZ	543-007-02-6g-XS	543-007-02-6g-XSET	M7x0.75
543-008-01-6g-XT	543-008-01-6g-XZ	543-008-01-6g-XS	543-008-01-6g-XSET	M8x0.5
543-008-02-6g-XT	543-008-02-6g-XZ	543-008-02-6g-XS	543-008-02-6g-XSET	M8x0.75
543-008-03-6g-XT	543-008-03-6g-XZ	543-008-03-6g-XS	543-008-03-6g-XSET	M8x1
543-009-01-6g-XT	543-009-01-6g-XZ	543-009-01-6g-XS	543-009-01-6g-XSET	M9x0.5
543-009-02-6g-XT	543-009-02-6g-XZ	543-009-02-6g-XS	543-009-02-6g-XSET	M9x0.75
543-009-03-6g-XT	543-009-03-6g-XZ	543-009-03-6g-XS	543-009-03-6g-XSET	M9x1
543-010-01-6g-XT	543-010-01-6g-XZ	543-010-01-6g-XS	543-010-01-6g-XSET	M10x0.5
543-010-02-6g-XT	543-010-02-6g-XZ	543-010-02-6g-XS	543-010-02-6g-XSET	M10x0.75
543-010-03-6g-XT	543-010-03-6g-XZ	543-010-03-6g-XS	543-010-03-6g-XSET	M10x1
543-010-04-6g-XT	543-010-04-6g-XZ	543-010-04-6g-XS	543-010-04-6g-XSET	M10x1.25
543-011-02-6g-XT	543-011-02-6g-XZ	543-011-02-6g-XS	543-011-02-6g-XSET	M11x0.75
543-011-03-6g-XT	543-011-03-6g-XZ	543-011-03-6g-XS	543-011-03-6g-XSET	M11x1
543-012-01-6g-XT	543-012-01-6g-XZ	543-012-01-6g-XS	543-012-01-6g-XSET	M12x0.5
543-012-02-6g-XT	543-012-02-6g-XZ	543-012-02-6g-XS	543-012-02-6g-XSET	M12x0.75
543-012-03-6g-XT	543-012-03-6g-XZ	543-012-03-6g-XS	543-012-03-6g-XSET	M12x1
543-012-04-6g-XT	543-012-04-6g-XZ	543-012-04-6g-XS	543-012-04-6g-XSET	M12x1.25
543-012-05-6g-XT	543-012-05-6g-XZ	543-012-05-6g-XS	543-012-05-6g-XSET	M12x1.5
543-014-01-6g-XT	543-014-01-6g-XZ	543-014-01-6g-XS	543-014-01-6g-XSET	M14x0.5
543-014-02-6g-XT	543-014-02-6g-XZ	543-014-02-6g-XS	543-014-02-6g-XSET	M14x0.75

SERIES 543 CHECK PLUGS FOR METRIC FINE THREAD RING GAUGE

Code(XT)	Code(XZ)	Code(XS)	Code(SET)	Size(mm)
543-014-03-6g-XT	543-014-03-6g-XZ	543-014-03-6g-XS	543-014-03-6g-XSET	M14x1
543-014-04-6g-XT	543-014-04-6g-XZ	543-014-04-6g-XS	543-014-04-6g-XSET	M14x1.25
543-014-05-6g-XT	543-014-05-6g-XZ	543-014-05-6g-XS	543-014-05-6g-XSET	M14x1.5
543-016-01-6g-XT	543-016-01-6g-XZ	543-016-01-6g-XS	543-016-01-6g-XSET	M16x0.5
543-016-02-6g-XT	543-016-02-6g-XZ	543-016-02-6g-XS	543-016-02-6g-XSET	M16x0.75
543-016-03-6g-XT	543-016-03-6g-XZ	543-016-03-6g-XS	543-016-03-6g-XSET	M16x1
543-016-04-6g-XT	543-016-04-6g-XZ	543-016-04-6g-XS	543-016-04-6g-XSET	M16x1.5
543-018-01-6g-XT	543-018-01-6g-XZ	543-018-01-6g-XS	543-018-01-6g-XSET	M18x0.5
543-018-02-6g-XT	543-018-02-6g-XZ	543-018-02-6g-XS	543-018-02-6g-XSET	M18x0.75
543-018-03-6g-XT	543-018-03-6g-XZ	543-018-03-6g-XS	543-018-03-6g-XSET	M18x1
543-018-04-6g-XT	543-018-04-6g-XZ	543-018-04-6g-XS	543-018-04-6g-XSET	M18x1.5
543-018-05-6g-XT	543-018-05-6g-XZ	543-018-05-6g-XS	543-018-05-6g-XSET	M18x2
543-020-01-6g-XT	543-020-01-6g-XZ	543-020-01-6g-XS	543-020-01-6g-XSET	M20x0.5
543-020-02-6g-XT	543-020-02-6g-XZ	543-020-02-6g-XS	543-020-02-6g-XSET	M20x0.75
543-020-03-6g-XT	543-020-03-6g-XZ	543-020-03-6g-XS	543-020-03-6g-XSET	M20x1
543-020-04-6g-XT	543-020-04-6g-XZ	543-020-04-6g-XS	543-020-04-6g-XSET	M20x1.5
543-020-05-6g-XT	543-020-05-6g-XZ	543-020-05-6g-XS	543-020-05-6g-XSET	M20x2
543-022-01-6g-XT	543-022-01-6g-XZ	543-022-01-6g-XS	543-022-01-6g-XSET	M22x0.5
543-022-02-6g-XT	543-022-02-6g-XZ	543-022-02-6g-XS	543-022-02-6g-XSET	M22x0.75
543-022-03-6g-XT	543-022-03-6g-XZ	543-022-03-6g-XS	543-022-03-6g-XSET	M22x1
543-022-04-6g-XT	543-022-04-6g-XZ	543-022-04-6g-XS	543-022-04-6g-XSET	M22x1.5
543-022-05-6g-XT	543-022-05-6g-XZ	543-022-05-6g-XS	543-022-05-6g-XSET	M22x2
543-024-01-6g-XT	543-024-01-6g-XZ	543-024-01-6g-XS	543-024-01-6g-XSET	M24x0.75
543-024-02-6g-XT	543-024-02-6g-XZ	543-024-02-6g-XS	543-024-02-6g-XSET	M24x1
543-024-03-6g-XT	543-024-03-6g-XZ	543-024-03-6g-XS	543-024-03-6g-XSET	M24x1.5
543-024-04-6g-XT	543-024-04-6g-XZ	543-024-04-6g-XS	543-024-04-6g-XSET	M24x2
543-027-01-6g-XT	543-027-01-6g-XZ	543-027-01-6g-XS	543-027-01-6g-XSET	M27x0.75
543-027-02-6g-XT	543-027-02-6g-XZ	543-027-02-6g-XS	543-027-02-6g-XSET	M27x1
543-027-03-6g-XT	543-027-03-6g-XZ	543-027-03-6g-XS	543-027-03-6g-XSET	M27x1.5
543-027-04-6g-XT	543-027-04-6g-XZ	543-027-04-6g-XS	543-027-04-6g-XSET	M27x2
543-030-01-6g-XT	543-030-01-6g-XZ	543-030-01-6g-XS	543-030-01-6g-XSET	M30x0.75
543-030-02-6g-XT	543-030-02-6g-XZ	543-030-02-6g-XS	543-030-02-6g-XSET	M30x1
543-030-03-6g-XT	543-030-03-6g-XZ	543-030-03-6g-XS	543-030-03-6g-XSET	M30x1.5
543-030-04-6g-XT	543-030-04-6g-XZ	543-030-04-6g-XS	543-030-04-6g-XSET	M30x2
543-030-05-6g-XT	543-030-05-6g-XZ	543-030-05-6g-XS	543-030-05-6g-XSET	M30x3
543-033-01-6g-XT	543-033-01-6g-XZ	543-033-01-6g-XS	543-033-01-6g-XSET	M33x0.75
543-033-02-6g-XT	543-033-02-6g-XZ	543-033-02-6g-XS	543-033-02-6g-XSET	M33x1
543-033-03-6g-XT	543-033-03-6g-XZ	543-033-03-6g-XS	543-033-03-6g-XSET	M33x1.5
543-033-04-6g-XT	543-033-04-6g-XZ	543-033-04-6g-XS	543-033-04-6g-XSET	M33x2

SERIES 543 CHECK PLUGS FOR METRIC FINE THREAD RING GAUGE

Code(XT)	Code(XZ)	Code(XS)	Code(SET)	Size(mm)
543-033-05-6g-XT	543-033-05-6g-XZ	543-033-05-6g-XS	543-033-05-6g-XSET	M33x3
543-036-01-6g-XT	543-036-01-6g-XZ	543-036-01-6g-XS	543-036-01-6g-XSET	M36x1
543-036-02-6g-XT	543-036-02-6g-XZ	543-036-02-6g-XS	543-036-02-6g-XSET	M36x1.5
543-036-03-6g-XT	543-036-03-6g-XZ	543-036-03-6g-XS	543-036-03-6g-XSET	M36x2
543-036-04-6g-XT	543-036-04-6g-XZ	543-036-04-6g-XS	543-036-04-6g-XSET	M36x3
543-039-01-6g-XT	543-039-01-6g-XZ	543-039-01-6g-XS	543-039-01-6g-XSET	M39x1
543-039-02-6g-XT	543-039-02-6g-XZ	543-039-02-6g-XS	543-039-02-6g-XSET	M39x1.5
543-039-03-6g-XT	543-039-03-6g-XZ	543-039-03-6g-XS	543-039-03-6g-XSET	M39x2
543-039-04-6g-XT	543-039-04-6g-XZ	543-039-04-6g-XS	543-039-04-6g-XSET	M39x3
543-042-01-6g-XT	543-042-01-6g-XZ	543-042-01-6g-XS	543-042-01-6g-XSET	M42x1
543-042-02-6g-XT	543-042-02-6g-XZ	543-042-02-6g-XS	543-042-02-6g-XSET	M42x1.5
543-042-03-6g-XT	543-042-03-6g-XZ	543-042-03-6g-XS	543-042-03-6g-XSET	M42x2
543-042-04-6g-XT	543-042-04-6g-XZ	543-042-04-6g-XS	543-042-04-6g-XSET	M42x3
543-042-05-6g-XT	543-042-05-6g-XZ	543-042-05-6g-XS	543-042-05-6g-XSET	M42x4
543-045-01-6g-XT	543-045-01-6g-XZ	543-045-01-6g-XS	543-045-01-6g-XSET	M45x1
543-045-02-6g-XT	543-045-02-6g-XZ	543-045-02-6g-XS	543-045-02-6g-XSET	M45x1.5
543-045-03-6g-XT	543-045-03-6g-XZ	543-045-03-6g-XS	543-045-03-6g-XSET	M45x2
543-045-04-6g-XT	543-045-04-6g-XZ	543-045-04-6g-XS	543-045-04-6g-XSET	M45x3
543-045-05-6g-XT	543-045-05-6g-XZ	543-045-05-6g-XS	543-045-05-6g-XSET	M45x4
543-048-01-6g-XT	543-048-01-6g-XZ	543-048-01-6g-XS	543-048-01-6g-XSET	M48x1
543-048-02-6g-XT	543-048-02-6g-XZ	543-048-02-6g-XS	543-048-02-6g-XSET	M48x1.5
543-048-03-6g-XT	543-048-03-6g-XZ	543-048-03-6g-XS	543-048-03-6g-XSET	M48x2
543-048-04-6g-XT	543-048-04-6g-XZ	543-048-04-6g-XS	543-048-04-6g-XSET	M48x3
543-048-05-6g-XT	543-048-05-6g-XZ	543-048-05-6g-XS	543-048-05-6g-XSET	M48x4
543-052-01-6g-XT	543-052-01-6g-XZ	543-052-01-6g-XS	543-052-01-6g-XSET	M52x1
543-052-02-6g-XT	543-052-02-6g-XZ	543-052-02-6g-XS	543-052-02-6g-XSET	M52x1.5
543-052-03-6g-XT	543-052-03-6g-XZ	543-052-03-6g-XS	543-052-03-6g-XSET	M52x2
543-052-04-6g-XT	543-052-04-6g-XZ	543-052-04-6g-XS	543-052-04-6g-XSET	M52x3
543-052-05-6g-XT	543-052-05-6g-XZ	543-052-05-6g-XS	543-052-05-6g-XSET	M52x4
543-056-01-6g-XT	543-056-01-6g-XZ	543-056-01-6g-XS	543-056-01-6g-XSET	M56x1
543-056-02-6g-XT	543-056-02-6g-XZ	543-056-02-6g-XS	543-056-02-6g-XSET	M56x1.5
543-056-03-6g-XT	543-056-03-6g-XZ	543-056-03-6g-XS	543-056-03-6g-XSET	M56x2
543-056-04-6g-XT	543-056-04-6g-XZ	543-056-04-6g-XS	543-056-04-6g-XSET	M56x3
543-056-05-6g-XT	543-056-05-6g-XZ	543-056-05-6g-XS	543-056-05-6g-XSET	M56x4
543-060-01-6g-XT	543-060-01-6g-XZ	543-060-01-6g-XS	543-060-01-6g-XSET	M60x1
543-060-02-6g-XT	543-060-02-6g-XZ	543-060-02-6g-XS	543-060-02-6g-XSET	M60x1.5
543-060-03-6g-XT	543-060-03-6g-XZ	543-060-03-6g-XS	543-060-03-6g-XSET	M60x2
543-060-04-6g-XT	543-060-04-6g-XZ	543-060-04-6g-XS	543-060-04-6g-XSET	M60x3
543-060-05-6g-XT	543-060-05-6g-XZ	543-060-05-6g-XS	543-060-05-6g-XSET	M60x4

SERIES 537/538

AMERICAN STANDARD THREAD RING GAUGE

CUSTOM-MADE
other sizes are available upon request

- Class 2A
- Conforms to standard ANSI B1.2
- Made of Oil Hardened Non-shringking steel
- Hardness HRC60-62



537-71620-UNF

Code(GO)	Code(NOGO)	Size
537-00440-UNC	538-00440-UNC	4-40UNC
537-04048-UNF	538-04048-UNF	4-48UNF
537-00632-UNC	538-00632-UNC	6-32UNC
537-06040-UNF	538-06040-UNF	6-40UNF
537-00832-UNC	538-00832-UNC	8-32UNC
537-08036-UNF	538-08036-UNF	8-36UNF
537-01024-UNC	538-01024-UNC	10-24UNC
537-01032-UNF	538-01032-UNF	10-32UNF
537-01420-UNC	538-01420-UNC	1/4-20UNC
537-01428-UNF	538-01428-UNF	1/4-28UNF
537-51618-UNC	538-51618-UNC	5/16-18UNC
537-51624-UNF	538-51624-UNF	5/16-24UNF
537-03816-UNC	538-03816-UNC	3/8-16UNC
537-03824-UNF	538-03824-UNF	3/8-24UNF

Code(GO)	Code(NOGO)	Size
537-71614-UNC	538-71614-UNC	7/16-14UNC
537-71620-UNF	538-71620-UNF	7/16-20 UNF
537-01213-UNC	538-01213-UNC	1/2-13 UNC
537-01220-UNF	538-01220-UNF	1/2-20 UNF
537-91612-UNC	538-91612-UNC	9/16-12UNC
537-91618-UNF	538-91618-UNF	9/16-18UNF
537-05811-UNC	538-05811-UNC	5/8-11UNC
537-05818-UNF	538-05818-UNF	5/8-18UNF
537-03410-UNC	538-03410-UNC	3/4-10UNC
537-03416-UNF	538-03416-UNF	3/4-16UNF
537-07809-UNC	538-07809-UNC	7/8-9UNC
537-07814-UNF	538-07814-UNF	7/8-14UNF
537-01080-UNC	538-01080-UNC	1-8 UNC
537-01012-UNF	538-01012-UNF	1-12UNF

SERIES 547

AMERICAN STANDARD THREAD PLUG GAUGE

CUSTOM-MADE
other sizes are available upon request

- Class 2B
- Conforms to standard ANSI B1.2
- Made of Oil Hardened Non-shringking steel
- Hardness HRC60-62



547-71620-UNF

Code	Size
547-00440-UNC	4-40UNC
547-04048-UNF	4-48UNF
547-00632-UNC	6-32UNC
547-06040-UNF	6-40UNF
547-00832-UNC	8-32UNC
547-08036-UNF	8-36UNF
547-01024-UNC	10-24UNC
547-01032-UNF	10-32UNF
547-01420-UNC	1/4-20UNC
547-01428-UNF	1/4-28UNF

Code	Size
547-51618-UNC	5/16-18UNC
547-51624-UNF	5/16-24UNF
547-03816-UNC	3/8-16UNC
547-03824-UNF	3/8-24UNF
547-71614-UNC	7/16-14UNC
547-71620-UNF	7/16-20 UNF
547-01213-UNC	1/2-13 UNC
547-01220-UNF	1/2-20 UNF
547-91612-UNC	9/16-12UNC
547-91618-UNF	9/16-18UNF

Code	Size
547-05811-UNC	5/8-11UNC
547-05818-UNF	5/8-18UNF
547-03410-UNC	3/4-10UNC
547-03416-UNF	3/4-16UNF
547-07809-UNC	7/8-9UNC
547-07814-UNF	7/8-14UNF
547-01080-UNC	1-8 UNC
547-01012-UNF	1-12UNF

SERIES 544 NPT THREAD GAUGE

- Conforms to standard ANSI/ASME B1.20.1
- Taper: 1:16
- Made of Oil Hardened Non-shringking steel

PLUG GAUGE



544-014-01

Code	Size	Code	Size
544-027-04	NPT 1/16" x 27	**544-11D5-12**	NPT1-1/4"x11.5
544-027-03	NPT 1/8" x 27	**544-11D5-11**	NPT1-1/2"x11.5
544-018-02	NPT1/4" x 18	**544-11D5-20**	NPT2"X11.5
544-018-33	NPT3/8"x18	**544-008-21**	NPT2-1/2"X8
544-014-01	NPT1/2" x 14	**544-008-30**	NPT3"X8
544-014-32	NPT3/4"x14	**544-008-32**	NPT3-1/2"X8
544-11D5-10	NPT1"x11.5	**544-008-40**	NPT4"X8

SERIES 544 NPT THREAD GAUGE

- Conforms to standard ANSI/ASME B1.20.1
- Taper: 1:16
- Made of Oil Hardened Non-shringking steel

RING GAUGE

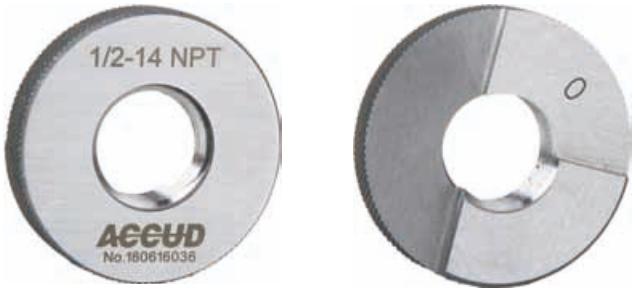

Front Back

544-014-01R

Code	Size	Code	Size
544-027-04R	NPT 1/16" x 27	**544-11D5-12R**	NPT1-1/4"x11.5
544-027-03R	NPT 1/8" x 27	**544-11D5-11R**	NPT1-1/2"x11.5
544-018-02R	NPT1/4" x 18	**544-11D5-20R**	NPT2"X11.5
544-018-33R	NPT3/8"x18	**544-008-21R**	NPT2-1/2"X8
544-014-01R	NPT1/2" x 14	**544-008-30R**	NPT3"X8
544-014-32R	NPT3/4"x14	**544-008-32R**	NPT3-1/2"X8
544-11D5-10R	NPT1"x11.5	**544-008-40R**	NPT4"X8

SERIES 545

WHITWORTH PIPE THREAD GAUGE (G SERIES)

- Conforms to standard ISO228

PLUG GAUGE



545-0500-01

Code	Size
545-0125-01	G1/8-28
545-0250-01	G1/4-19
545-0375-01	G3/8-19
545-0500-01	G1/2-14
545-0625-01	G5/8-14
545-0750-01	G3/4-14
545-0875-01	G7/8-14
545-1000-01	G1-11

Code	Size
545-1125-01	G1-1/8-11
545-1250-01	G1-1/4-11
545-1500-01	G1-1/2-11
545-1750-01	G1-3/4-11
545-2000-01	G2-11
545-2500-01	G2-1/2-11
545-3000-01	G3-11

Code(GO)	Code(NOGO)	Size
545-4000-01G	545-4000-01NG	G4-11

SERIES 535/536

WHITWORTH PIPE THREAD GAUGE (G SERIES)

- Standard ISO 228
- Material: OHNS
  (Oil Hardened Non-shrinking Steel)
- Stable dimension and wear resistance
- Hardness HRC60-62

RING GAUGE



535-0250-01



536-0250-01

Code(GO)	Code(NOGO)		Size
	Class B	Class A	
535-0125-01	536-0125-01	536-0125-01A	G1/8-28
535-0250-01	536-0250-01	536-0250-01A	G1/4-19
535-0375-01	536-0375-01	536-0375-01A	G3/8-19
535-0500-01	536-0500-01	536-0500-01A	G1/2-14
535-0625-01	536-0625-01	536-0625-01A	G5/8-14
535-0750-01	536-0750-01	536-0750-01A	G3/4-14
535-0875-01	536-0875-01	536-0875-01A	G7/8-14
535-1000-01	536-1000-01	536-1000-01A	G1-11

Code(GO)	Code(NOGO)		Size
	Class B	Class A	
535-1125-01	536-1125-01	536-1125-01A	G1-1/8-11
535-1250-01	536-1250-01	536-1250-01A	G1-1/4-11
535-1500-01	536-1500-01	536-1500-01A	G1-1/2-11
535-1750-01	536-1750-01	536-1750-01A	G1-3/4-11
535-2000-01	536-2000-01	536-2000-01A	G2-11
535-2500-01	536-2500-01	536-2500-01A	G2-1/2-11
535-3000-01	536-3000-01	536-3000-01A	G3-11
535-4000-01	536-4000-01	536-4000-01A	G4-11

595 AIR GAUGE DISPLAY

VIDEO

- Can store 10 measuring programs, and the program can be switched quickly
- Data storage function, support manual and automatic storing, 1000 groups data can be stored
- Automatically detect internal or external dimension measurement
- Automatic grouping function for workpiece sorting
- RS232 data cable is used to transfer data to computer

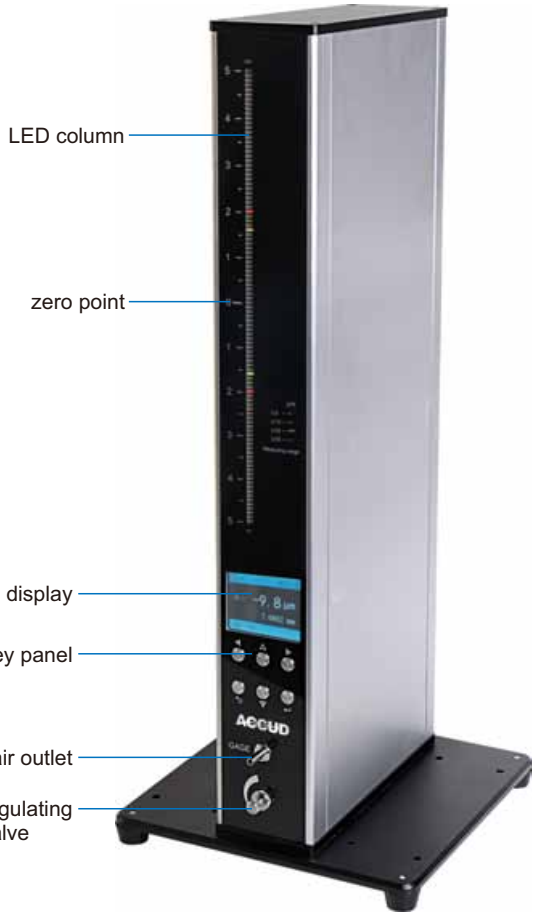

Application



Back of display

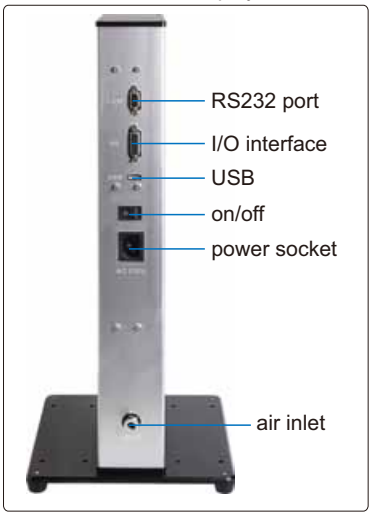

Work in groups



RS232 data cable (included)



Air filter and pressure regulating valve **(optional)**



SPECIFICATION

Code		595-101-01			
LED quantity		101 pcs			
LED color		red, orange, green			
LED height		254mm			
Range		10μm	20μm	50μm	100μm
Resolution	**LED column**	0.1μm	0.2μm	0.5μm	1μm
	Display	0.1μm			
Accuracy		0.2μm	0.4μm	0.5μm	1μm
Air supply		dir and clean, 0.4~0.8MPa			
Output		RS232/USB, I/O interface			
Operation temperature		0~45°C			
Power		100-240V, 50/60Hz			
Power consumption		<20W			
Max. current		2A			
Dimension(LxWxH)		170x65x475mm			
Weight		3kg			

OPTIONAL ACCESSORIES

Air filter
Pressure regulating valve
RS232 cable

unit: mm

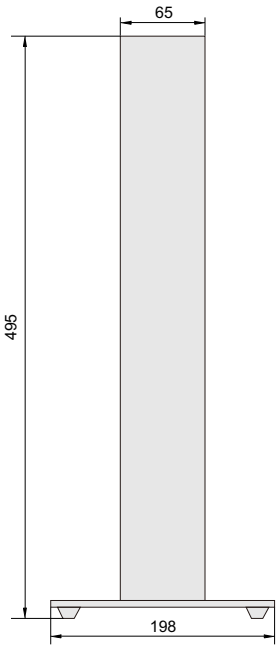

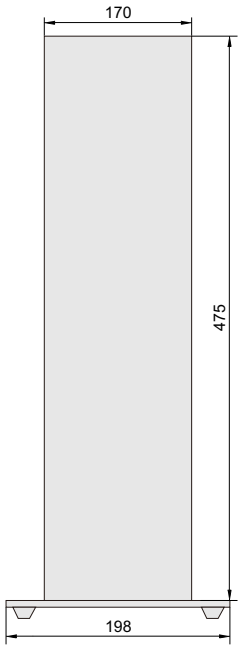

SERIES 594 AIR GAUGE

CUSTOM-MADE

Inside air plug gauge and standard ring



594-xxxxx-01

Outside air snap gauge and standard column gauge



594-xxxxx-05

≤Ø12mm(included)



> Ø12mm(included)



Code	Range	Remark
594-XXXXX-01	Ø2-150mm	measure diameter of hole

Code	Range	Remark
594-XXXXX-05	Ø4-120mm	measure diameter of shaft

SERIES 558 DIGITAL THREAD DEPTH GAUGE

CUSTOM-MADE
other sizes are available upon request

LR44 + LR44

- Supplied with GO and NO-GO gages together
- Check GO and NO-GO while measuring the depth of thread
- Resolution: 0.01mm/0.0005"
- Button: mm/in, SET, preset(P+,P-)
- Automatic power off



558-005-01

Code	Size	Depth range (L)	Accuracy
558-003-01	M3x0.5-6H	4-33mm	±0.03mm
558-004-01	M4x0.7-6H	4-33mm	±0.03mm
558-005-01	M5x0.8-6H	4-33mm	±0.03mm
558-006-01	M6x1-6H	4-33mm	±0.03mm
558-008-01	M8x1.25-6H	5-55mm	±0.03mm
558-010-01	M10x1.5-6H	5-55mm	±0.03mm
558-012-01	M12x1.75-6H	5-55mm	±0.03mm
558-014-01	M14x2-6H	5-55mm	±0.03mm

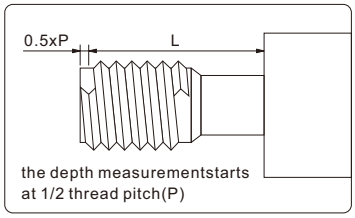

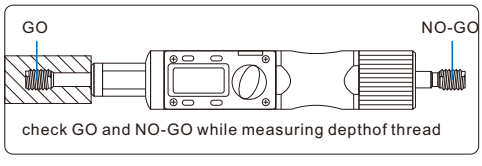

SERIES 559 THREAD DEPTH GAUGE

CUSTOM-MADE
other sizes are available upon request

- Supplied with GO and NO-GO gages together
- Check GO and NO-GO while measuring the depth thread
- The GO gage can be replaced after wear
- Graduation: 0.1mm
- Accuracy: ±0.1mm



559-004-01

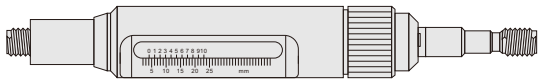

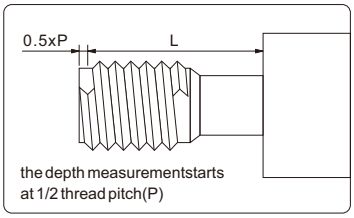

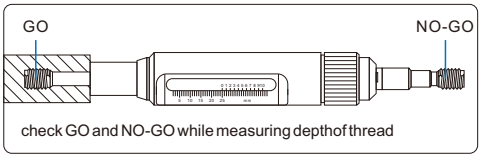

Code	Size	Depth range (L)
559-003-01	M3x0.5-6H	4-25mm
559-004-01	M4x0.7-6H	4-25mm
559-005-01	M5x0.8-6H	4-25mm
559-006-01	M6x1-6H	4-25mm
559-008-01	M8x1.25-6H	5-45mm
559-010-01	M10x1.5-6H	5-45mm
559-012-01	M12x1.75-6H	5-45mm
559-014-01	M14x2-6H	5-45mm

822 DIGITAL PROTRACTOR

Data output | CR2032

- Button function:
  SET: preset the reading and change the measuring direction
  MODE: choose range 90°, 180°, 360°
  ZERO/ON/OFF: set zero and power on/off
- Data output
- With 150mm and 300mm blade
- With 90° square
- Made of stainless steel



unit: mm

Set zero

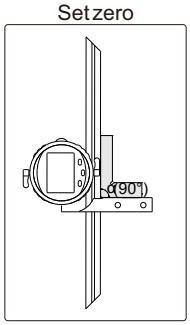

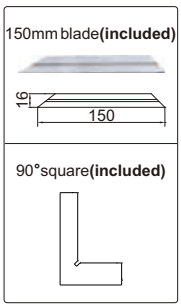

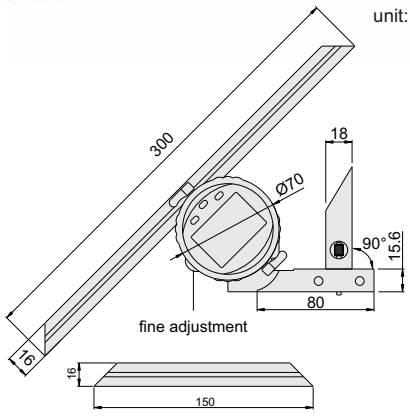

Application

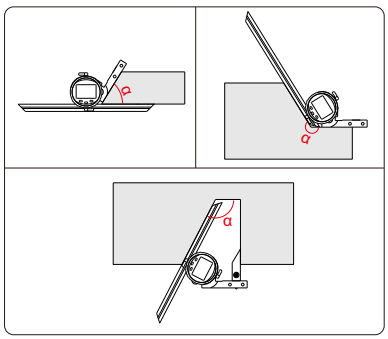

Code	Range	Resolution	Accuracy
822-360-01	0-360°	10"/0.005°	±5'

814 UNIVERSAL PROTRACTOR

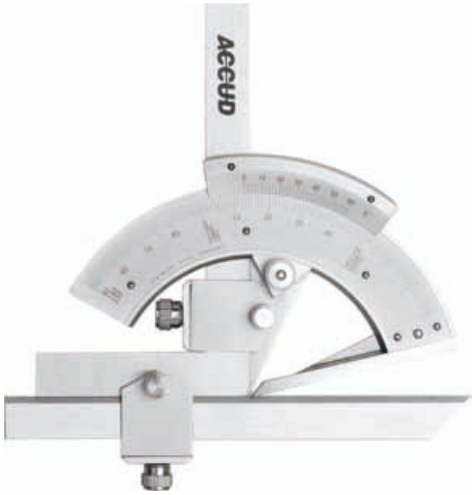

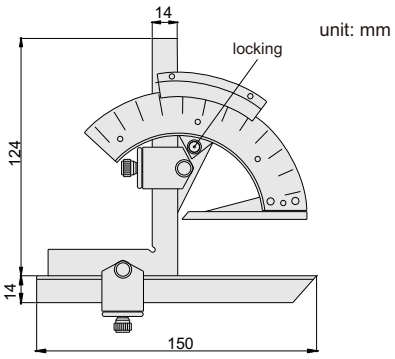

- Graduation:2'
- Made of stainless steel
- Satin chrome plated scale

Code	Range	Accuracy
814-320-01	0 - 320°	±2'

Application

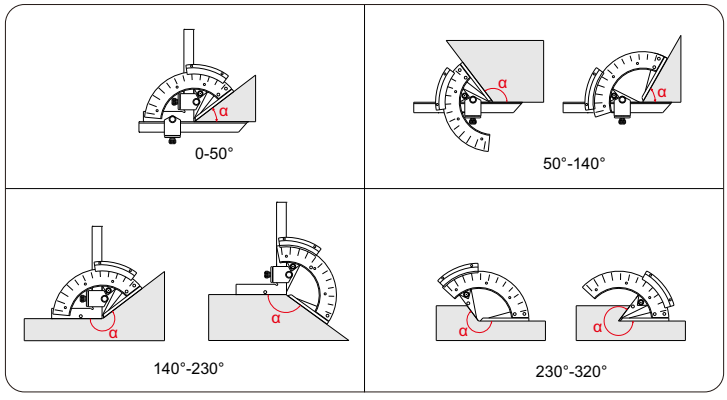

815 UNIVERSAL PROTRACTOR

- Graduation: 5'
- Parallax-free reading
- With 150mm and 300mm blade
- With 90° square
- Made of stainless steel
- Optional accessory: clamp for height gages



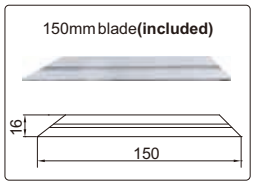

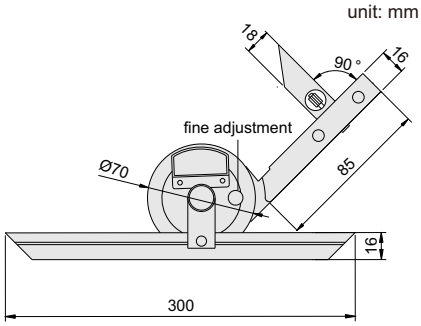

Code	Range	Accuracy
815-360-01	0 - 360°	±5'

Application

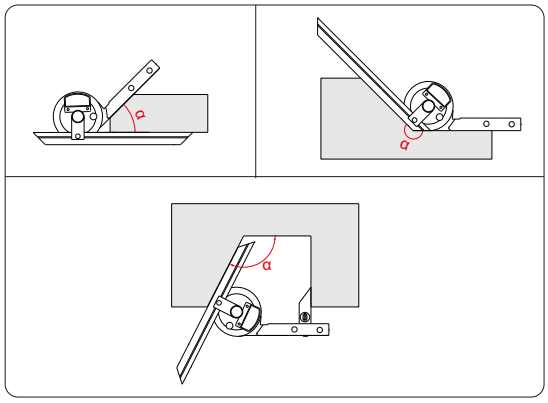

816 UNIVERSAL PROTRACTOR

- Graduation : 5'
- With 150mm and 300mm blade
- With 90° square
- Made of stainless steel
- Optional accessory: clamp for height gages



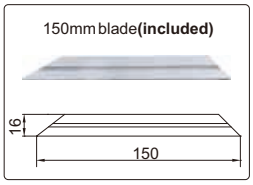

unit: mm

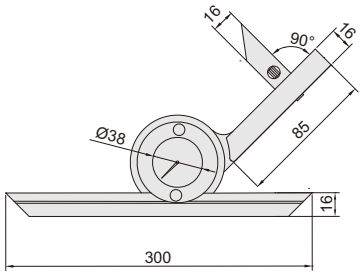

Application

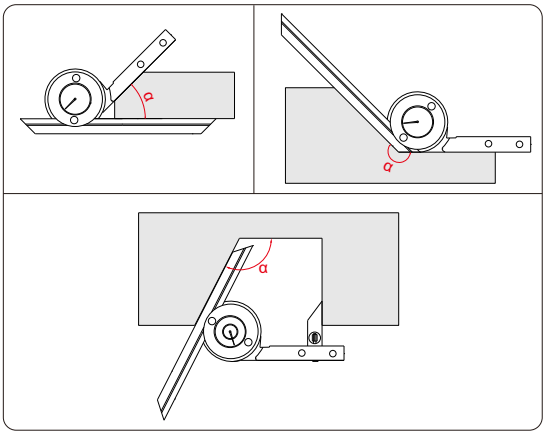

Code	Range	Accuracy
816-360-01	0 - 360°	±5'

726 DIGITAL PROTRACTOR

CR2032

- Buttons: ON/OFF, HOLD, ZERO, ABS
- Measuring ranges can be set 0°~225°, -225°~0°, -45°~180°, -180°~45°
- Remove the locking screw for 360° range
- With level vial
- Automatic power off



unit: mm

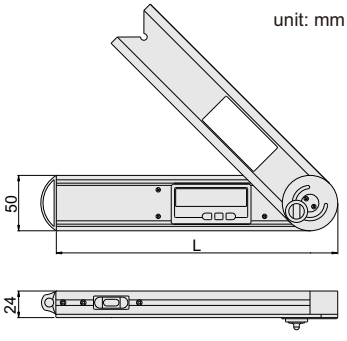

Application

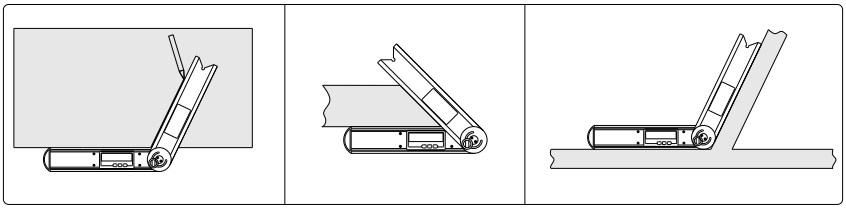

Code	Range	Resolution	Accuracy	Size(L)
726-360-01	0 - 360°	0.05°	±0.15°	250mm

823 DIGITAL PROTRACTOR

AAA

- Suitable for setting horizontal and vertical mitre angles of cutting machines
- Buttons: on/off, HOLD/SUP, SPR/CNR/MTR/BVL
- IP54 dust/waterproof
- With transverse and longitudinal level
- Absolute level, zero setting is not needed when batteries are replaced
- Backlight turns off in one minute after reading is stable, automatic power off in 5 minutes



Application

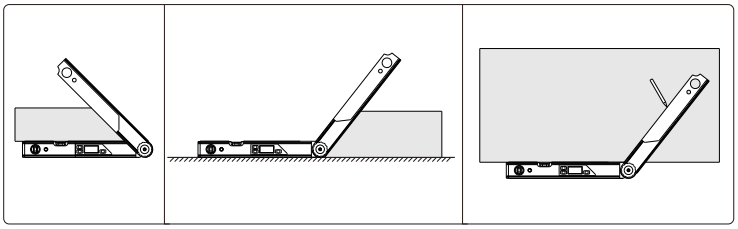

unit: mm

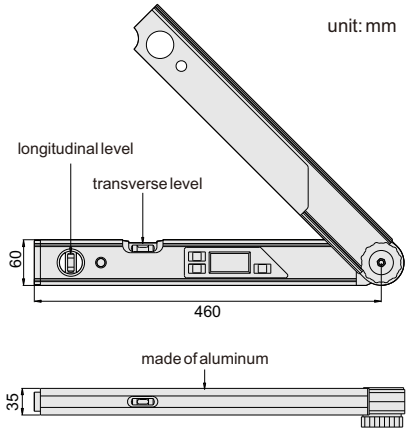

Code	Range	Resolution	Accuracy
823-225-01	0 - 225°	0.05°	±0.10°

SERIES 824 DIGITAL PROTRACTOR

CR2032

- Button function:
  Hold/Rev: hold/flip
  ZERO: set zero
  ON/OFF: power on/off
- With locking screw
- Side with magnetic force
- Resolution: 0.05°



824-004-11

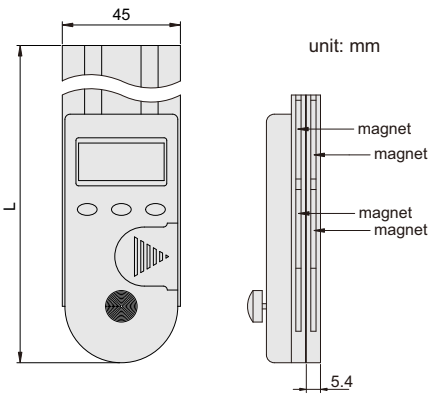

Package



Code	Size	Range	Accuracy	L
824-004-11	100mm	0-360°	±0.3°	103
824-008-11	200mm	0-360°	±0.3°	205
824-012-11	300mm	0-360°	±0.3°	306

SERIES 821 DIGITAL PROTRACTOR

CR2032

- Resolution: 0.1°
- Buttons: on/off, zero
- With locking attachment
- Rule graduation: 1mm and 1/32"
- Automatic power off



821-008-01

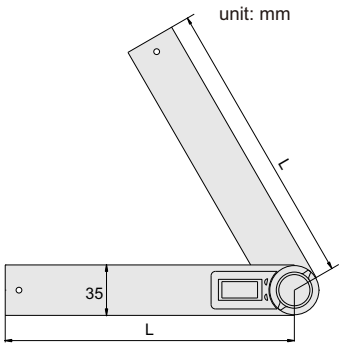

Package



Application

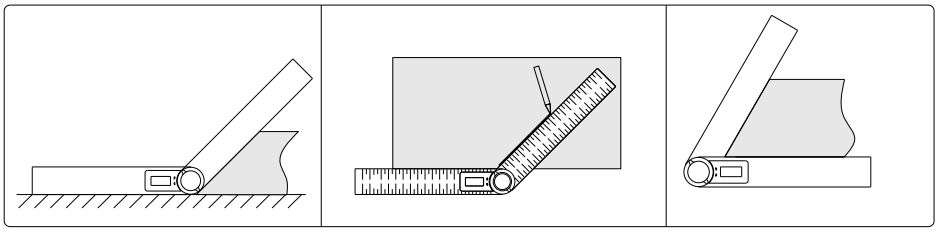

Code	Size(L)	Range	Accuracy
821-008-01	200mm	0 - 360°	±0.3°
821-012-01	300mm	0 - 360°	±0.3°
821-020-01	500mm	0 - 360°	±0.3°

SERIES 821 DIGITAL PROTRACTOR

CR2032

- Economic type
- Resolution: 0.1°
- Buttons: on/off, zero
- With locking attachment
- Rule graduation: 1mm and 1/32"
- Automatic power off



821-008-01N

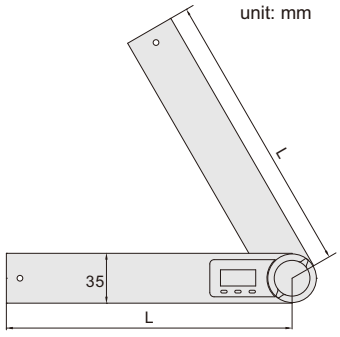

Package



Application

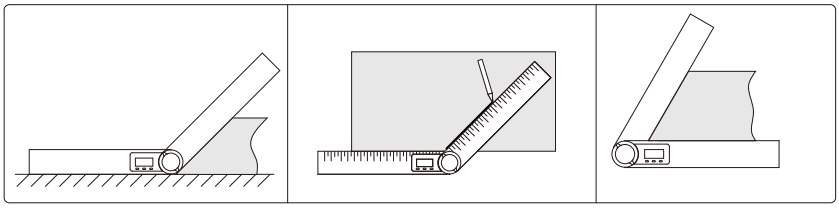

Code	Size(L)	Range	Accuracy
821-008-01N	200mm	0 - 360°	±0.3°
821-012-01N	300mm	0 - 360°	±0.3°

SERIES 817 COMBINATION SQUARE SET

- Protractor (made of cast iron), only for **817-180-02**:
  Used to set an angle or angle measurement,
  measuring range: 0-180°, accuracy: ±20'
- Square (made of cast iron):
  Used as 90° square or 45° square
  accuracy of 90° square: ±8',
  accuracy of 45° square: ±10'
- Blade (made of stainless steel):
  Used as rule, measuring range: 300mm/12"
  front side graduation: 0.5mm and 1/32"
  reverse side graduation: 1mm and 1/64"
  Used as rule, measuring range: 600mm/24"
  front side graduation: 0.5mm and 1/32"
  reverse side graduation: 1mm and 1/64"
- Center finder (made of cast iron), only for **817-090-13** and **817-180-02**:
  To locate center of cylinders with diameter (Ød): 30-100mm, accuracy: ±0.15mm

Application

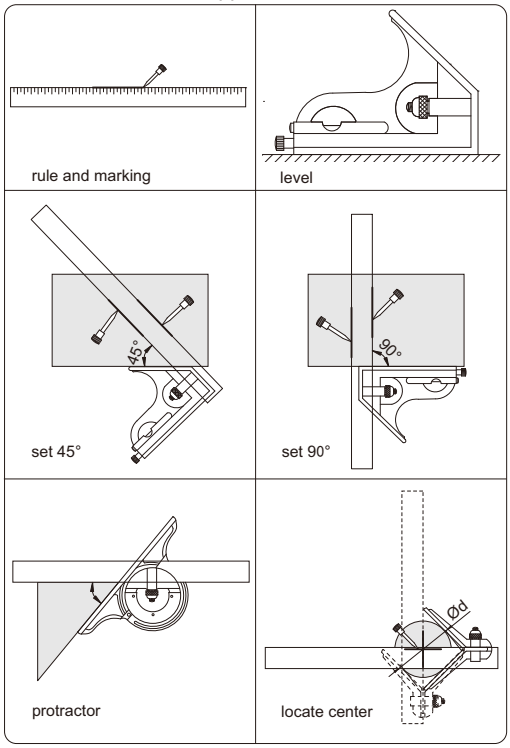



817-090-12



817-090-13

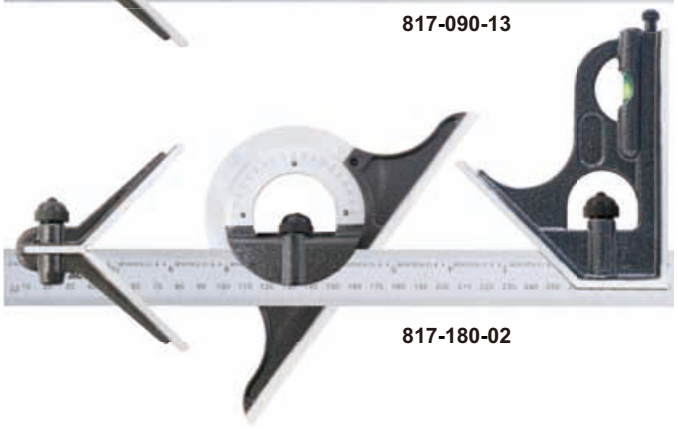

817-180-02

817-000-24

unit: mm

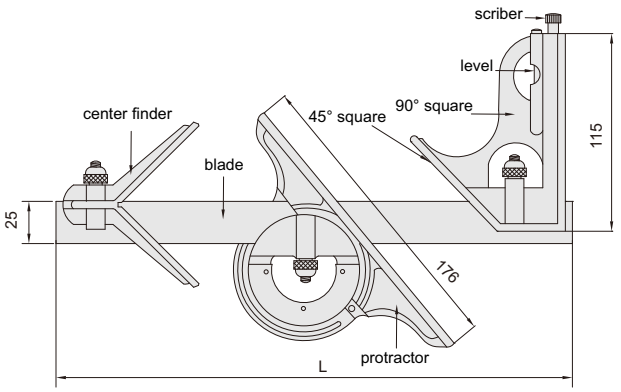

Application

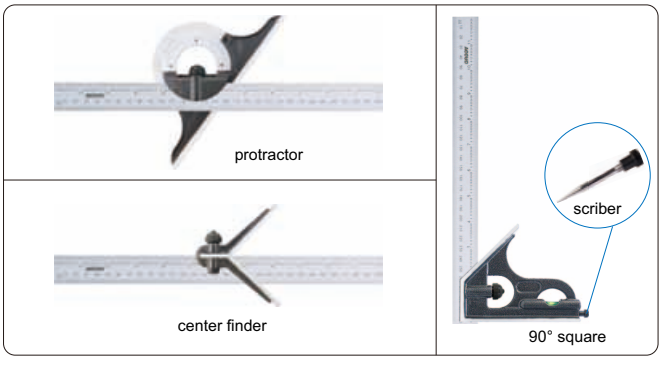

Code	L	Remark
817-090-12	305	2-piece set
817-090-13	305	3-piece set
817-180-02	305	4-piece set

Code	L
817-000-24	610

811 PROTRACTOR

- Economic type
- Made of stainless steel
- With locking screw



Package



unit: mm

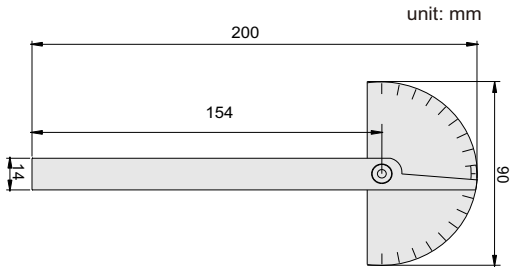

Code	Size	Range	Graduation	Accuracy
811-180-11	90x52mm	0 - 180°	1°	±0.5°

SERIES 811 PROTRACTOR

- Graduation : 1°
- Made of stainless steel
- Satin chrome plated scale
- With locking screw



811-180-01

unit: mm

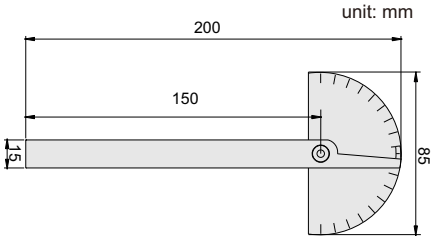

Package





811-180-02

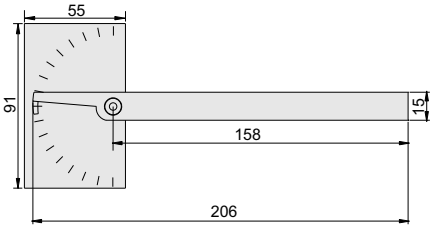

Code	Size	Range	Accuracy
811-180-01	85x150mm	0 - 180°	±0.3°
811-180-02	91x158mm	0 - 180°	±0.3°

SERIES 812 PROTRACTOR

- Graduation : 1°
- Satin chrome plated scale
- With locking screw



812-005-01

unit: mm

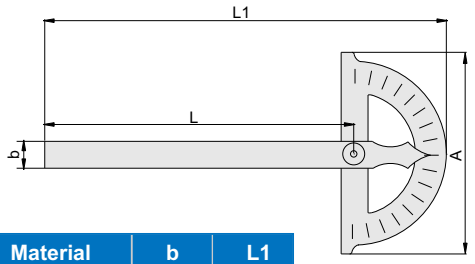

Package



Code	Size(AxL)	Range	Accuracy	Material	b	L1
812-003-01	80x120mm	0 - 180°	±0.3°	stainless steel	11	165
812-005-01	120x150mm	0 - 180°	±0.3°	stainless steel	13	215
812-006-01	150x200mm	0 - 180°	±0.3°	stainless steel	16	280
812-008-01	200x300mm	0 - 180°	±0.3°	stainless steel	20	410
812-012-01	300x500mm	0 - 180°	±0.3°	carbon steel	30	675

SERIES 813 PROTRACTOR

- Graduation:1°
- Made of carbon steel
- Satin chrome plated scale
- The blade is moveable



813-012-01



unit: mm

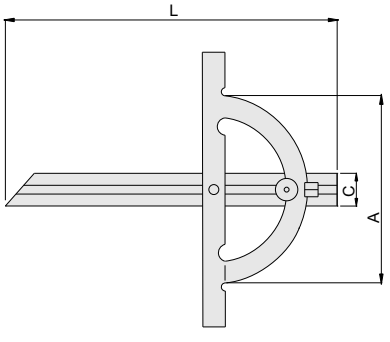

Code	Size(AxL)	Range	Accuracy	C
813-006-01	100x150mm	10 - 170°	±0.3°	18
813-012-01	150x300mm	10 - 170°	±0.3°	22
813-016-01	200x400mm	10 - 170°	±0.3°	25
813-020-01	250x500mm	10 - 170°	±0.3°	28
813-024-01	300x600mm	10 - 170°	±0.3°	32

SERIES 832 90° BEVELED EDGE SQUARE

- Two beveled measuring faces
- Made of hardened stainless steel

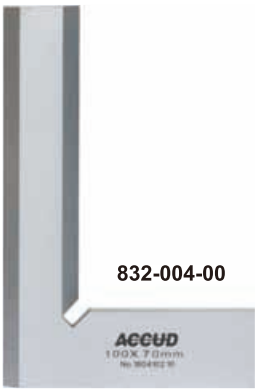

832-004-00

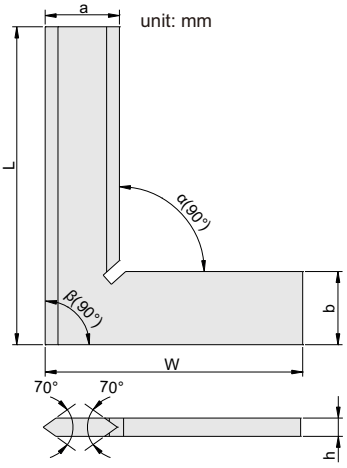

Grade 00

Code	Size(LxW)	Squareness(α)	Squareness(β)	Chrome plating	a	b	h
832-002-00	50x40mm	2.4μm	2.5μm	With	13	13	4
832-003-00	75x50mm	2.6μm	2.8μm	With	15	15	4
832-004-00	100x70mm	2.8μm	3.0μm	With	20	20	5
832-006-00	150x100mm	3.2μm	3.5μm	With	30	30	6
832-008-00	200x130mm	3.7μm	4.0μm	With	34	34	7
832-010-00	250x165mm	4.2μm	4.5μm	Without	35	35	7
832-012-00	300x200mm	4.6μm	5.0μm	Without	40	40	8

Grade 0

Code	Size(LxW)	Squareness(α)	Squareness(β)	Chrome plating	a	b	h
832-002-10	50x40mm	6μm	6μm	With	13	13	4
832-003-10	75x50mm	6μm	7μm	With	15	15	4
832-004-10	100x70mm	7μm	7μm	With	20	20	5
832-006-10	150x100mm	7μm	8μm	With	30	30	6
832-008-10	200x130mm	8μm	9μm	With	34	34	7
832-010-10	250x165mm	9μm	10μm	Without	35	35	7
832-012-10	300x200mm	10μm	11μm	Without	40	40	8

SERIES 840 90° BEVELED EDGE SQUARE WITH WIDE BASE

- DIN875 grade 0
- Beveled edges for inside and outside measurement
- Made of hardened stainless steel



840-006-10

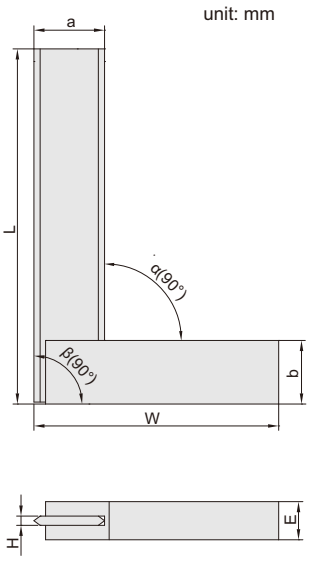

Code	Size(LxW)	Squareness		a	b	H	E
		Inside(α)	Outside(β)				
840-002-10	50x40mm	6μm	6μm	12	12	3	10
840-003-10	75x50mm	6μm	7μm	14	14	3	10
840-004-10	100x70mm	7μm	7μm	18	18	3	10
840-006-10	150x100mm	8μm	8μm	22	22	4	12
840-008-10	200x130mm	9μm	9μm	25	25	4	12

SERIES 841 90° FLAT EDGE SQUARE

- DIN875 grade 0
- Made of hardened stainless steel



841-004-10

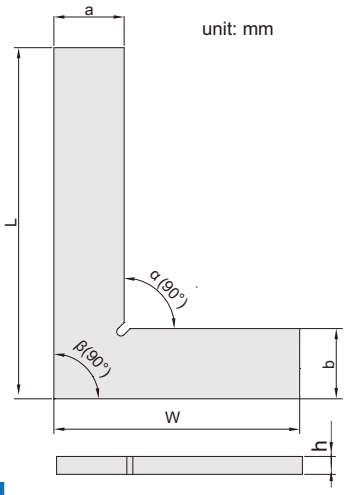

Code	Size(LxW)	Squareness(α)	Squareness(β)	a	b	h
841-002-10	50x40mm	6μm	6μm	15	15	4
841-003-10	75x50mm	6μm	7μm	15	15	4
841-004-10	100x70mm	7μm	7μm	20	20	5
841-006-10	150x100mm	7μm	8μm	30	30	6
841-008-10	200x130mm	8μm	9μm	34	34	7
841-010-10	250x165mm	9μm	10μm	35	35	7
841-012-10	300x200mm	10μm	11μm	40	40	8

SERIES 842 90° FLAT EDGE SQUARE WITH WIDE BASE

- DIN875 grade 0
- Made of hardened stainless steel



842-004-10

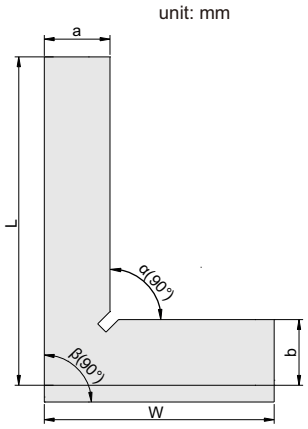

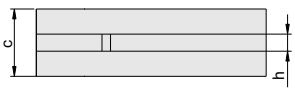

Code	Size(LxW)	Squareness(α)	Squareness(β)	a	b	c	h
842-002-10	50x40mm	6μm	6μm	13	13	13	4
842-003-10	75x50mm	6μm	7μm	15	15	15	4
842-004-10	100x70mm	7μm	7μm	20	20	20	5
842-006-10	150x100mm	7μm	9μm	30	30	30	6
842-008-10	200x130mm	8μm	9μm	34	34	30	7
842-010-10	250x165mm	9μm	10μm	35	35	35	7
842-012-10	300x200mm	10μm	11μm	40	40	40	8

SERIES 843 90° FLAT EDGE SQUARE WITH WIDE BASE

- DIN875 grade 0
- Made of hardened stainless steel



843-004-10

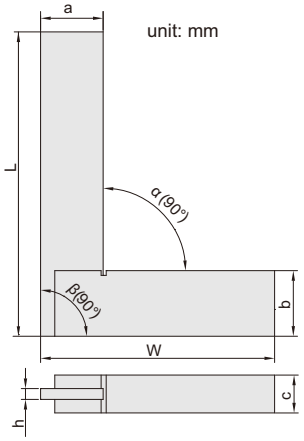

Code	Size(LxW)	Squareness(α)	Squareness(β)	a	b	c	h
843-002-10	50x40mm	6μm	6μm	12	12	10	3
843-003-10	75x50mm	6μm	7μm	14	14	10	3
843-004-10	100x70mm	7μm	7μm	18	18	10	3
843-006-10	150x100mm	8μm	8μm	22	22	12	4
843-008-10	200x130mm	9μm	9μm	25	25	12	4

SERIES 850 MACHINIST SQUARE

- Made of carbon steel, no anti-rust treatment, not hardened



850-006-02

Code	Size(LxW)	Squareness		a	b	h
		Inside(α)	Outside(β)			
850-002-02	50x30mm	24μm	25μm	12	12	3
850-003-02	75x50mm	26μm	28μm	16	16	3
850-004-02	100x70mm	28μm	30μm	19	19	5
850-005-02	125x80mm	30μm	33μm	22	22	5
850-006-02	150x100mm	33μm	35μm	25	25	6
850-008-02	200x130mm	38μm	40μm	25	25	6
850-010-02	250x165mm	43μm	45μm	25	25	6
850-012-02	300x200mm	47μm	50μm	30	30	6
850-014-02	350x200mm	51μm	55μm	38	38	6
850-016-02	400x200mm	56μm	60μm	38	38	9
850-018-02	450x250mm	58μm	65μm	38	38	9
850-020-02	500x300mm	65μm	70μm	38	38	9

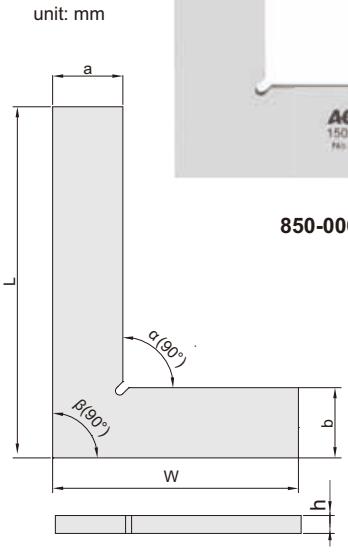

SERIES 845 MACHINIST SQUARE WITH WIDE BASE

- DIN875 grade 2
- Made of carbon steel

Code	Size(LxW)	Squareness(α)	Squareness(β)	a	b	c	h
845-002-02	50x40mm	24μm	25μm	16	12	9	3
845-003-02	75x50mm	26μm	28μm	16	16	9	3
845-004-02	100x70mm	28μm	30μm	19	19	12	3
845-006-02	150x100mm	33μm	35μm	25	25	16	3
845-008-02	200x130mm	37μm	40μm	30	32	16	3.2
845-010-02	250x165mm	42μm	45μm	30	32	19	3.2
845-012-02	300x200mm	47μm	50μm	32	32	19	3.2
845-016-02	400x250mm	56μm	60μm	38	38	22	5
845-020-02	500x300mm	65μm	70μm	45	50	25	6
845-024-02	600x350mm	75μm	80μm	50	50	30	6
845-030-02	750x400mm	90μm	95μm	55	55	50	6
845-036-02	900x500mm	103μm	110μm	65	75	50	9
845-040-02	1000x550mm	113μm	120μm	65	75	50	9

unit: mm

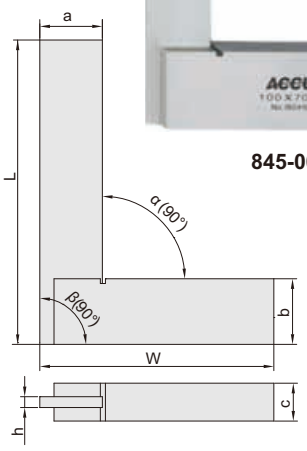



845-004-02

839 SQUARE SET

- Includes:
  - -90° tool maker square 25x20mm
    DIN875 grade 00 (code **833-025-00**)
  - -90° tool maker square 40x28mm
    DIN875 grade 00 (code **833-040-00**)
  - -90° beveled edge square 75x50mm
    DIN875 grade 00 (code **832-003-00**)
  - -straight edge 100mm
    DIN874 (code **994-004-01**)
  - -scriber
- Made of hardened stainless steel





unit: mm

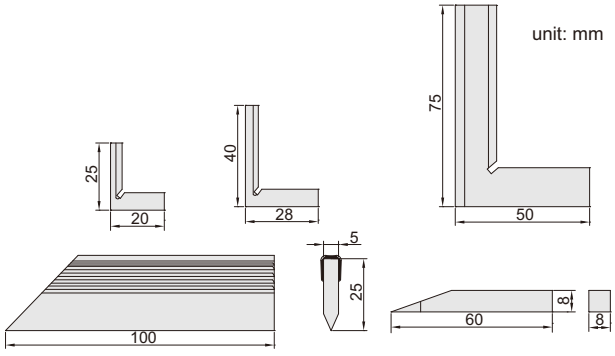

Code
839-000-05

SERIES 833 90° TOOL MAKER SQUARE

- DIN875 grade 00
- Beveled edge for inside measurement
- Made of hardened stainless steel



833-040-00

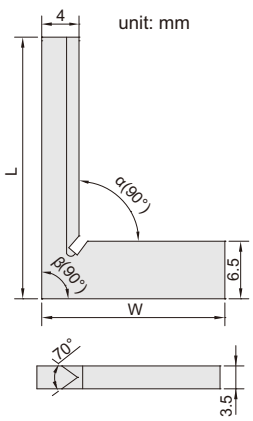

Code	Size(LxW)	Squareness	
		Inside(α)	Outside(β)
833-025-00	25x20mm	2.2μm	2.3μm
833-040-00	40x28mm	2.3μm	2.4μm

SERIES 838 CYLINDER SQUARE

- Made of special alloy steel, hardness HRC58~60
- The handle can be removed



838-008-00

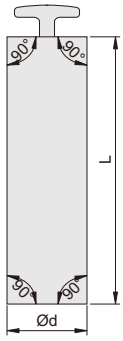

Inspect 90° external angles

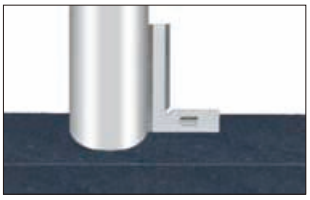

Code	Size(ØdxL)	Squareness
838-008-00	Ø80x200mm	1μm
838-012-00	Ø100x315mm	2μm

831 ADJUSTABLE SQUARE

- The straight edge can move and can be locked by the screw
- Made of hardened stainless steel

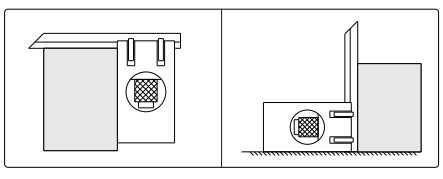



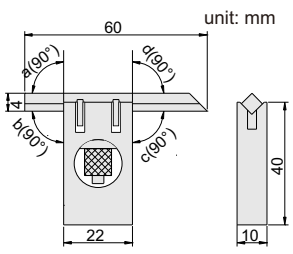

Code	Squareness (a, b, c, d)
831-002-10	7μm

SERIES 846 45° SQUARE

- Made of hardened stainless steel



846-006-02

unit: mm

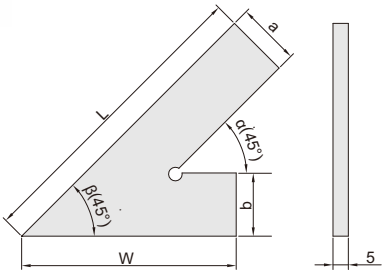

Code	Size(LxW)	Accuracy		a	b
		Inside(α)	Outside(β)		
846-005-02	120x80mm	29μm	32μm	20	20
846-006-02	150x100mm	32μm	35μm	20	20
846-008-02	200x130mm	36μm	40μm	25	25

SERIES 856 45° SQUARE WITH WIDE BASE

- Made of hardened stainless steel



856-006-02

unit: mm

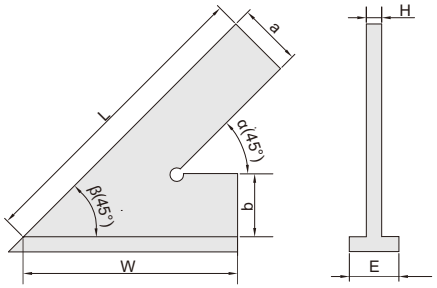

Code	Size(LxW)	Accuracy		a	b	H	E
		Inside(α)	Outside(β)				
856-005-02	120x80mm	29μm	32μm	20	20	5	20
856-006-02	150x100mm	32μm	35μm	20	20	5	20
856-008-02	200x130mm	36μm	40μm	25	25	5	25

SERIES 847 60° SQUARE

- Made of hardened stainless steel



847-006-02

unit: mm

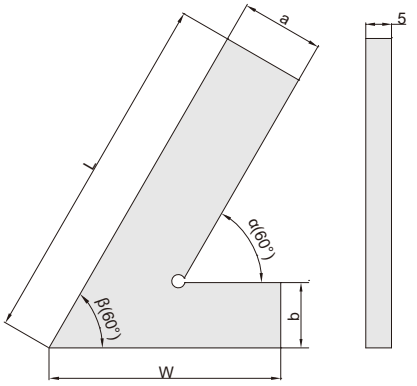

Code	Size(LxW)	Accuracy		a	b
		Inside(α)	Outside(β)		
847-004-02	100x70mm	28μm	30μm	20	20
847-005-02	120x80mm	30μm	32μm	20	20
847-006-02	150x100mm	32μm	35μm	20	20
847-008-02	200x130mm	37μm	40μm	25	25

SERIES 857 60° SQUARE WITH WIDE BASE

- Made of hardened stainless steel



857-006-02

unit: mm

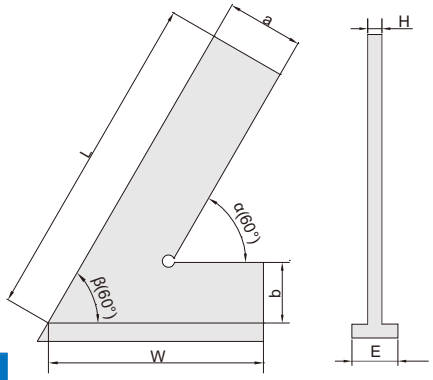

Code	Size(LxW)	Accuracy		a	b	H	E
		Inside(α)	Outside(β)				
857-005-02	120x80mm	30μm	33μm	20	20	5	20
857-006-02	150x100mm	33μm	36μm	20	20	5	20
857-008-02	200x130mm	37μm	41μm	25	25	5	25

SERIES 848 120° SQUARE

- Made of hardened stainless steel

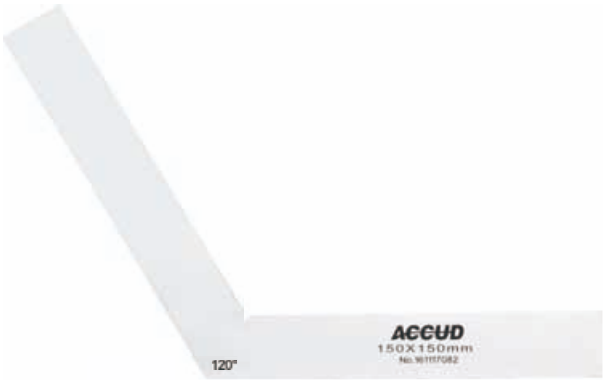

848-004-02

unit: mm

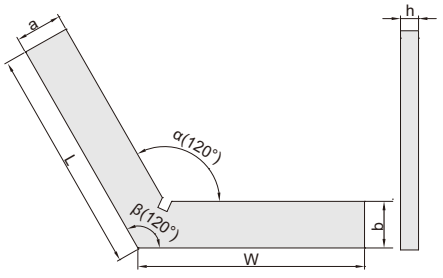

Code	Size(LxW)	Accuracy		a	b	h
		Inside(α)	Outside(β)			
848-002-02	50x50mm	24μm	25μm	15	15	4
848-003-02	75x75mm	26μm	28μm	20	20	5
848-004-02	100x100mm	29μm	30μm	20	20	5

SERIES 849 135° SQUARE WITH WIDE BASE

- Made of hardened stainless steel



849-006-02

unit: mm

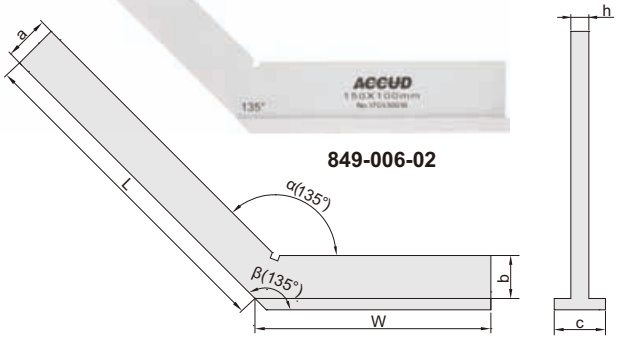

Code	Size(LxW)	Accuracy		a	b	c	h
		Inside(α)	Outside(β)				
849-005-02	120x80mm	31μm	33μm	20	20	20	5
849-006-02	150x100mm	34μm	36μm	20	20	20	5
849-008-02	200x130mm	39μm	41μm	30	30	30	7

SERIES 643 GRANITE SQUARE

Certificate

CUSTOM-MADE
other sizes are available upon request



643-010-01

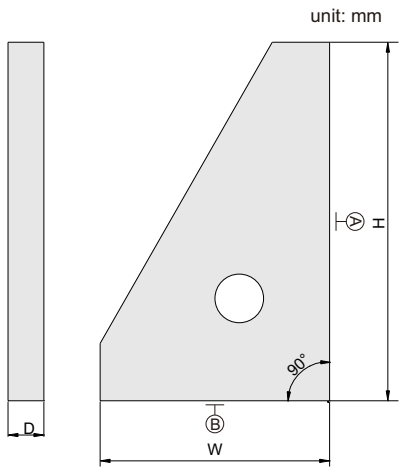

Code	Size(HxW)	Flatness (A)	Flatness (B)	Squareness(A and B)	D
643-010-01	250x160mm	1μm	1μm	2μm	50mm
643-016-01	400x250mm	1.5μm	1μm	3μm	50mm
643-024-01	630x400mm	2μm	1.5μm	4μm	60mm

With manufacturer inspection certificate

SERIES 644 GRANITE SQUARE

Certificate

CUSTOM-MADE
other sizes are available upon request



644-012-01

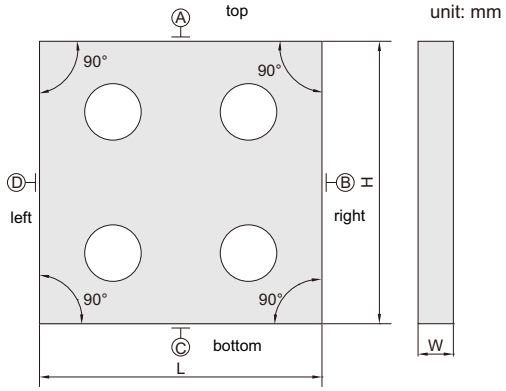

Code	Size(LxH)	Flatness (A , B , C and D)	Parallelism or squareness (A , B , C and D)	W
644-012-01	315x315mm	1.1μm	2.6μm	40
644-020-01	500x500mm	1.5μm	3.5μm	60

With manufacturer inspection certificate

645 GRANITE SQUARE AND V-BLOCK

- Thread holes: M8



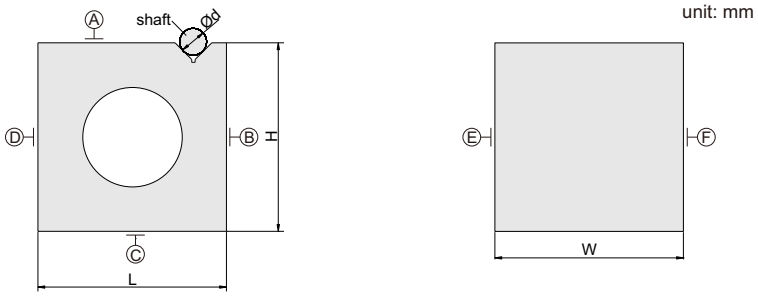

Code	Size(LxWxH)	Range of shafts (Ød)	Parallelism or squareness A, B, C, D, E and F	Parallelism or squareness of V grooves to A, B, C, D, E and F
645-006-01	160x160x160mm	6 - 42mm	6μm	6μm

SERIES 649 MAGNETIC SQUARE AND V-BLOCK



649-004-01

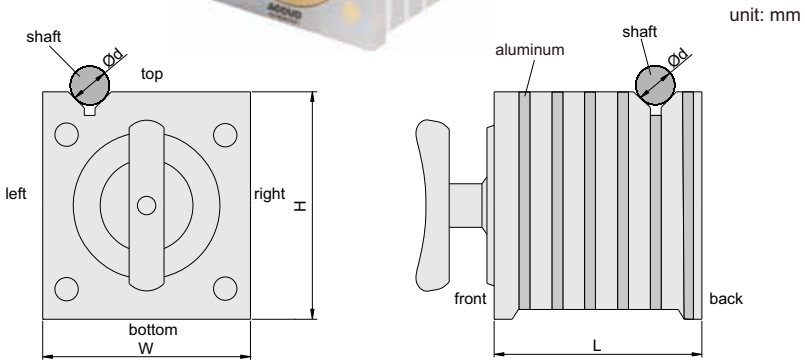

Code	Size(LxWxH)	Magnetic force		Range of shafts (Ød)	Parallelism or squareness between top, bottom, left, right and back sides	Parallelism or squareness of both V grooves to top, bottom, left, right and back sides
		V-groove	Surface			
649-004-01	100x100x100mm	25kgf	50kgf	6 - 36mm	20μm	20μm
649-006-01	150x150x150mm	50kgf	140kgf	6 - 44mm	25μm	25μm

SERIES 642 GRANITE STRAIGHT EDGE



642-020-01

unit: mm

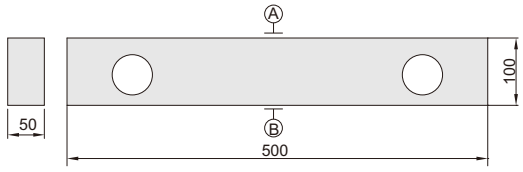

642-020-01

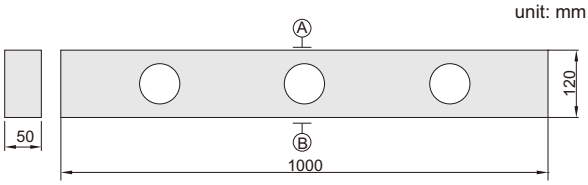

642-040-01

Code	Length(L)	Flatness of A and B	Parallelism between A and B	W	H
642-020-01	500mm	2.1μm	3.2μm	50	100
642-040-01	1000mm	3μm	4.5μm	50	120

With manufacturer inspection certificate

SERIES 648 GRANITE PARALLEL SET

- Made of granite
- Two parallels per set



unit: mm

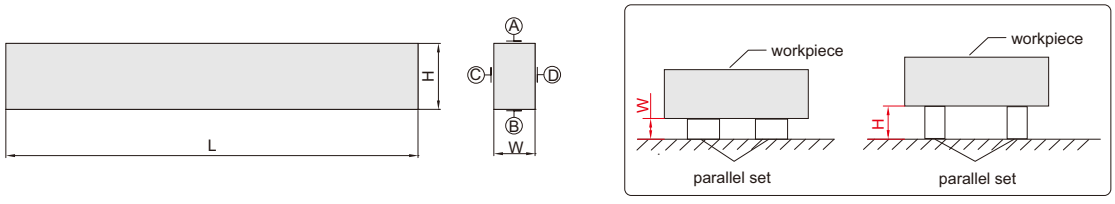

Code	Size(LxWxH)	Parallelism between A and B	Parallelism between C and D	Height difference of a matched pair
648-250-01	250x25x40mm	3μm	3μm	3μm

With manufacturer inspection certificate

SERIES 647 MAGNALIUM STRAIGHT EDGES

- Made of magnalium, light weight, non-deform, no rusty



647-040-01

unit: mm

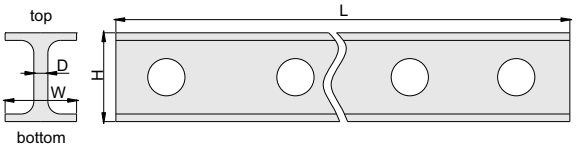

Code	Length(L)	Flatness of top and bottom	Parallelism between top and bottom	H	W	D
647-020-01	500mm	3μm	4μm	60	30	5
647-040-01	1000mm	5μm	8μm	60	30	5
647-060-01	1500mm	15μm	22μm	100	40	7
647-080-01	2000mm	18μm	27μm	100	40	7
647-100-01	2500mm	22μm	33μm	100	40	7
647-120-01	3000mm	48μm	72μm	150	80	8
647-140-01	3500mm	56μm	84μm	150	80	8
647-160-01	4000mm	64μm	110μm	150	80	10
647-200-01	5000mm	80μm	130μm	175	80	10
647-240-01	6000mm	100μm	150μm	175	80	10

SERIES 994 STRAIGHT EDGE

- Beveled edge to check the flatness
- DIN874
- Made of stainless steel
- Stain chrome plating



994-004-01

unit: mm

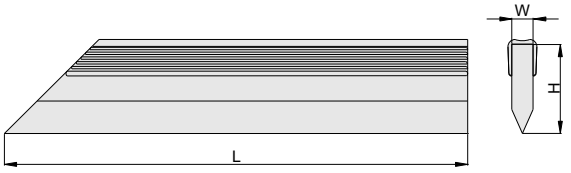

Code	Size (L)	Straightness	W	H
994-002-01	50mm	1.0μm	5	20
994-003-01	75mm	1.0μm	5	25
994-004-01	100mm	1.0μm	5	25
994-005-01	125mm	1.0μm	5	25
994-006-01	150mm	1.0μm	6	30
994-008-01	200mm	2.0μm	6	30
994-010-01	250mm	2.0μm	8	40
994-012-01	300mm	3.0μm	8	40
994-016-01	400mm	3.0μm	10	50
994-020-01	500mm	4.0μm	10	50

SERIES 991 STRAIGHT EDGE RULE



991-012-01

- Check straightness, as well as for measurement
- Made of hardened tool steel, chrome plated
- Graduation: 1mm

unit: mm

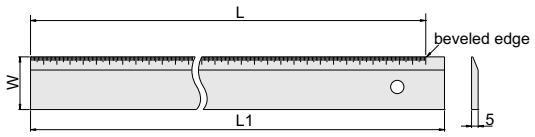

Application

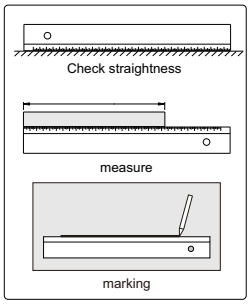

Code	Range(L)	Straightness	W	L1
991-012-01	300mm	0.02mm	40	310
991-020-01	500mm	0.03mm	40	510
991-040-01	1000mm	0.04mm	50	1010

SERIES 907 PRECISION STRAIGHT EDGE WITH BEVELED EDGE



907-012-11

- Check flatness and for marking
- Made of tool steel

unit: mm

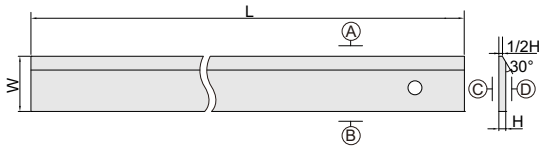

Application

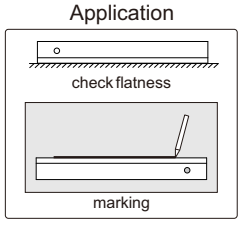

Code	Range(L)	Flatness of A and B	Flatness of C and D	W	H
907-012-11	305mm	0.005mm	0.05mm	41	6.3
907-024-11	610mm	0.006mm	0.06mm	51	7.9
907-036-11	914mm	0.007mm	0.06mm	64	9.5

SERIES 906 PRECISION STRAIGHT EDGE



906-012-11

- Check flatness and for marking
- Made of tool steel

unit: mm

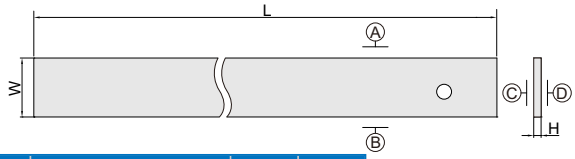

Application

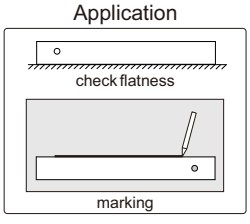

Code	Range(L)	Flatness of A and B	Flatness of C and D	W	H
906-012-11	305mm	0.005mm	0.05mm	41	7.9
906-024-11	610mm	0.006mm	0.06mm	51	8.5
906-036-11	914mm	0.007mm	0.06mm	64	9.5

SERIES 865 STRAIGHTNESS GAUGE

- Measure straightness of workpieces
- Data output(cable code:200-03 or 200-04), only for **865-380-01**



865-380-01

unit:mm

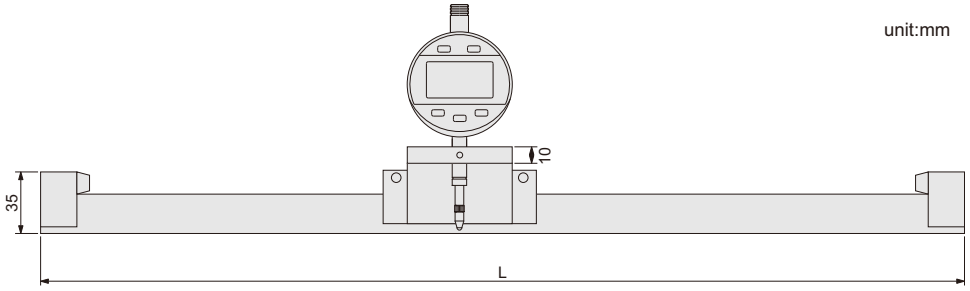



865-380-11

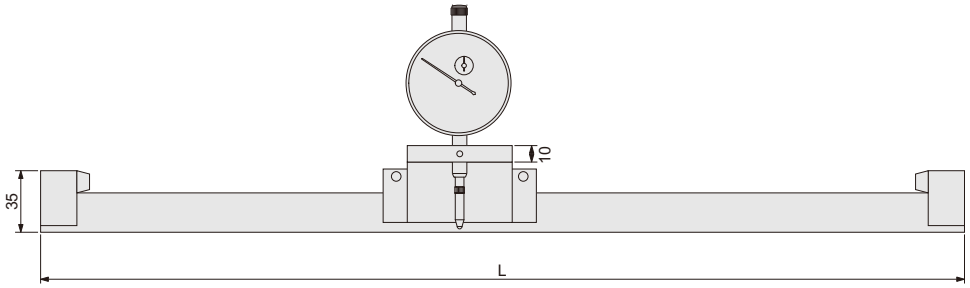

Code	Measuring range	Digital indicator resolution	Straightness accuracy	L
865-380-01	380mm	0.001mm/0.00005"	10μm	520
865-600-01	600mm		15μm	750
865-800-01	800mm		18μm	950
865-1000-01	1000mm		20μm	1150

Code	Measuring range	Dial indicator graduation	Straightness accuracy	L
865-380-11	380mm	0.01mm	10μm	520
865-600-11	600mm		15μm	750
865-800-11	800mm		18μm	950
865-1000-11	1000mm		20μm	1150

Application

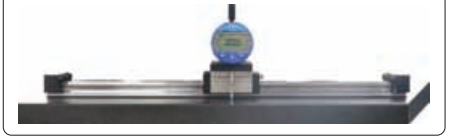

SERIES 713 BLOCK LEVEL

- For use in setting machined surfaces precisely horizontal
- Sensibility: 0.02mm/m per division
- Vee angle : 140°



713-006-02

unit: mm



Code	Size (L)	H	W
713-006-02	150mm	42	47
713-008-02	200mm	45	47
713-012-02	300mm	45	49

SERIES 713 BLOCK LEVEL

- For use in setting machined surfaces precisely horizontal
- Sensibility: 0.02mm/m per division
- Vee angle : 140°



713-006-02D

unit: mm

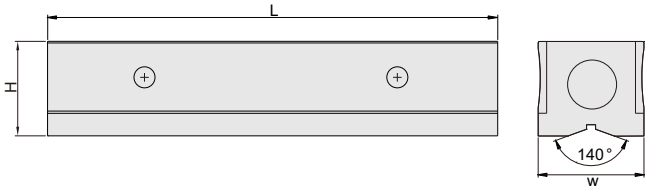

Code	Size (L)	H	W
713-006-02D	150mm	42	47
713-008-02D	200mm	45	47
713-012-02D	300mm	45	49

SERIES 715 BLOCK LEVEL

- For use in setting machined surfaces precisely horizontal
- Vee angle : 140°



715-008-05

unit: mm

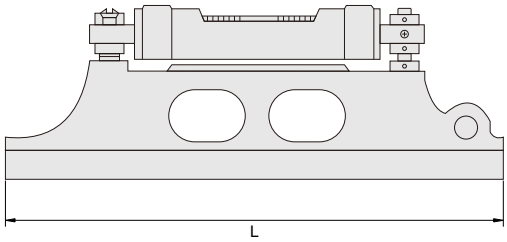

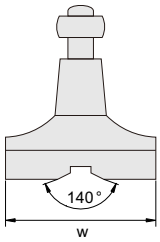

Sensibility 0.05mm/m

Code	Size (L)	W
715-006-05	150mm	38
715-008-05	200mm	44
715-012-05	300mm	44

Sensibility 0.1mm/m

Code	Size (L)	W
715-006-10	150mm	38
715-008-10	200mm	44
715-012-10	300mm	44

710 MINI LEVEL

- No need to set zero before use
- Sensibility: 0.1mm/m(=0.0057°)



unit: mm

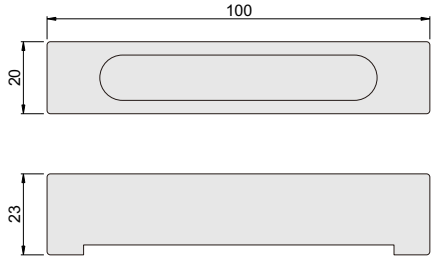

Code
710-004-10

SERIES 711 FRAME LEVEL

- For using setting machined surfaces precisely horizontal and vertical
- Sensibility: 0.02mm/m per division
- V-groove on the bottom and left for shafts (**711-004-02** only has v-groove on the bottom)



711-006-02



711-004-02

unit: mm

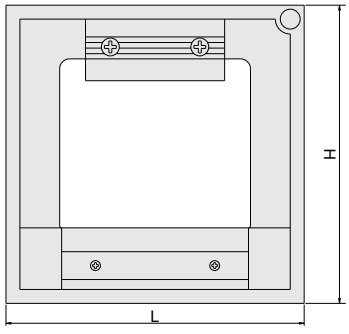

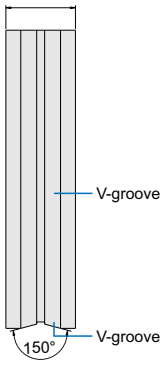

Code	Size (LxHxW)
711-004-02	100x100x32mm
711-006-02	150x150x38mm
711-008-02	200x200x40mm
711-010-02	250x250x42mm
711-012-02	300x300x45mm

SERIES 711 FRAME LEVEL

- For using setting machined surfaces precisely horizontal and vertical
- Sensibility: 0.02mm/m per division
- V-groove on the bottom and left for shafts



711-006-02D

unit: mm

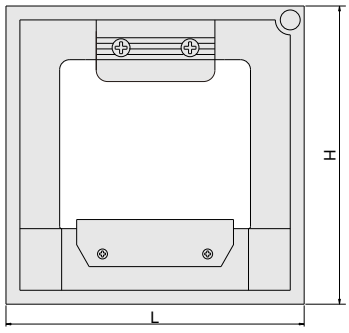

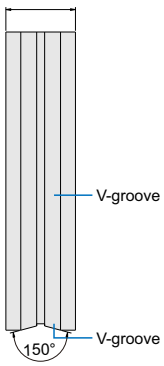

Code	Size (LxHxW)
711-006-02D	150x150x38mm
711-008-02D	200x200x40mm
711-010-02D	250x250x42mm
711-012-02D	300x300x45mm

714 OPTICAL IMAGE LEVEL

- Sensibility: 0.01mm/m(0.001°)
- Accuracy:±0.01mm/m(range: ±1mm)
  ±0.02mm/m(other)
- For use in setting machined surfaces precisely horizontal

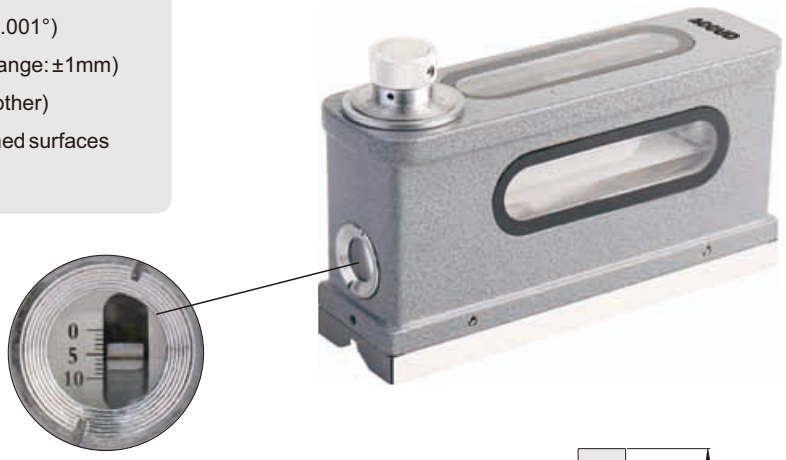

unit: mm

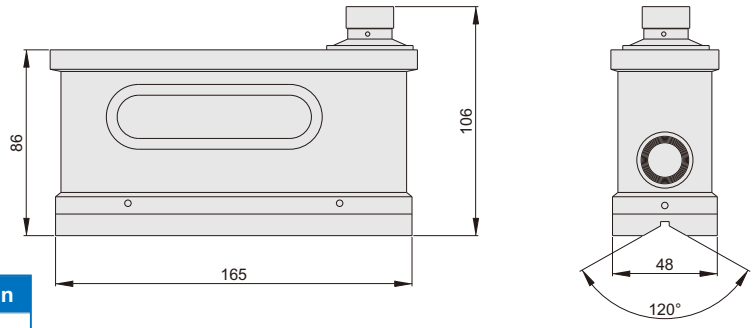

Code	Range	Graduation
714-006-01	0-10mm/m(±5mm/m)	0.01mm/m

718 BUILT-IN BLUETOOTH BLOCK LEVEL

AAA

- Button function: on/off, data hold, reading flips over, unit conversion (°, mm/m)
- Analog bubbles can show tilt trends in X-axis and Y-axis
- Built-in Bluetooth, transmission distance is 10 meters (under the condition of no obstruction and no electromagnetic interference)
- With software for Android system
- Automatic power off



unit: mm

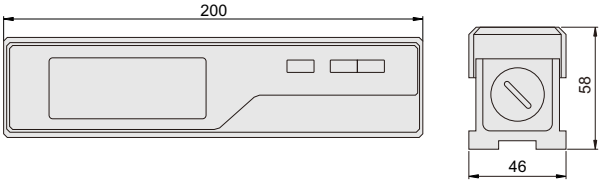

Code	Range	Resolution	Accuracy	Repeatability	Response time
718-008-01	±0.5mm/m(±0.028°)	0.01mm/m(0.001°)	±(1+Ax2%)△*	0.01mm/m	< 3s

*A is the measured value, △is the resolution

721 DIGITAL LEVEL

AAA

- Use as level or protractor
- Accuracy : ±0.1°(vertical and horizontal), ±0.2°(other direction)
- Absolute horizontal reference can save in memory for ever
- Button: on/off, zero
- Magnetic base
- Use in 4 directions
- Automatic power off



unit: mm

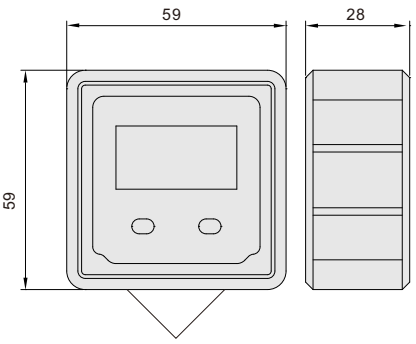

Use as level

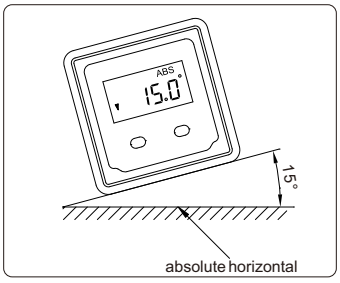

Use as protractor

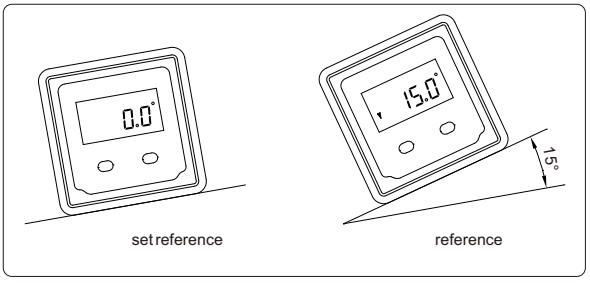

Code	Range	Resolution
721-180-01	0 - 360°(90°x4)	0.05°

722 DIGITAL LEVEL

IP54 AAA

- Use as level or protractor
- Resolution: 0.05°
- Accuracy : ±0.1°(vertical and horizontal), ±0.2°(other direction)
- Magnetic base, with groove
- Aluminum frame provides with high rigidity and low weight
- Absolute horizontion reference can save in memory for ever



unit: mm

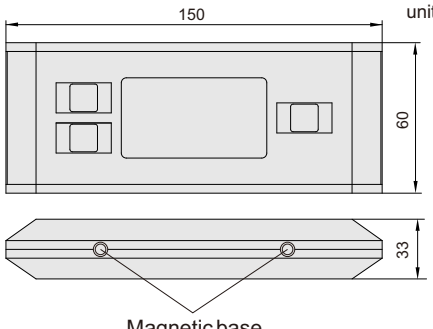

use in 4 directions

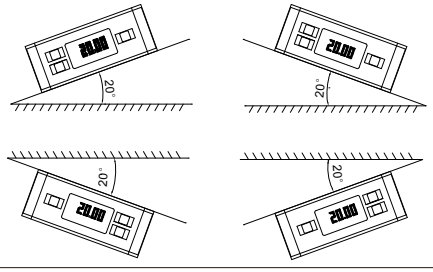

Use as level

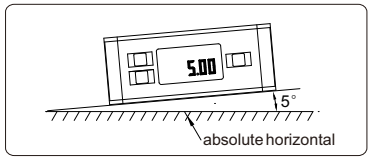

Use as protractor

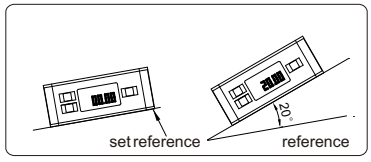

Code	Range	Dimension(LxWx H)
722-360-01	0 - 360° (90°x4)	150x60x33mm

723 DIGITAL LEVEL

AAA

- Use as level or protractor
- Use in 4 directions
- Magnetic base
- Accuracy : ±0.1°(vertical and horizontal), ±0.2°(other direction)
- Metal cover
- Adjust the display direction automatically



unit: mm

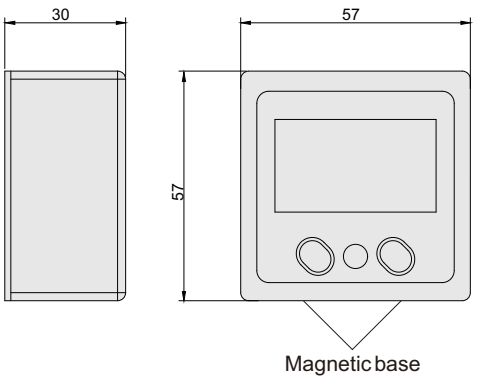

Use as level

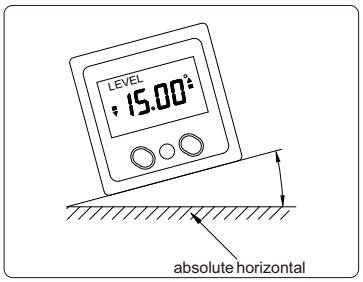

Use as protractor

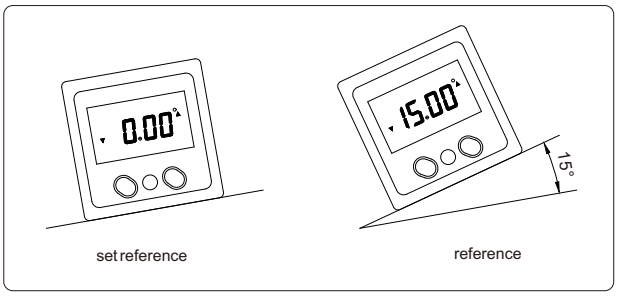

Code	Range	Resolution
723-360-01	0 - 360° (4x90°)	0.05°

731 DIGITAL LEVEL

WIFI Charge

- Use as level or protractor
- Magnetic base
- The display flips over when the bottom faces up
- The backlight is on automatically when in use, and automatically off in 30 seconds after use
- Absolute horizontal reference can save in memory for ever
- Button: ON/OFF/REF; DATA; %, °; HOLD
- Built-in bluetooth, Max. transmission distance: 6m
- Automatic power off in 3 minutes
- With re-chargeable battery, for 5 hours working



Charging interface



the bottom has 2x1/8" thread mountingholes

unit: mm

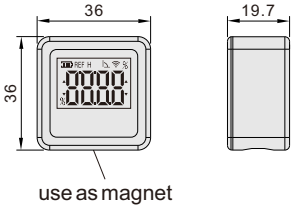

Use as level

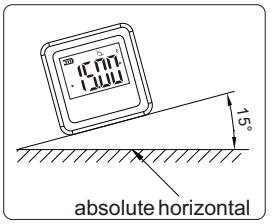

Charging cable (included)



Display flips

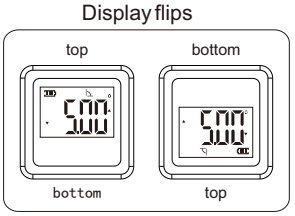

Angle measuring

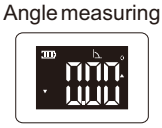

Slope measuring



Use as protractor

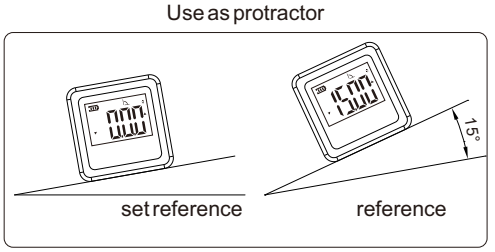

Code	Range	Resolution	Accuracy	Repeatability
731-360-01	4x90°	0.05°	±0.2°	0.1°

730 DIGITAL LEVEL

WIFI Charge

- Built-in bluetooth, Max. transmission distance: 6m
- X-Y axis measurement
- Use as level or protractor
- Button: ON/OFF/REF; DATA; MM/M, %, °; HOLD
- Bottom and top with magnetic
- Absolute zero measurement based onhorizontal plane
- With re-chargeable battery, for 16hours working



Charging cable (included)



unit: mm

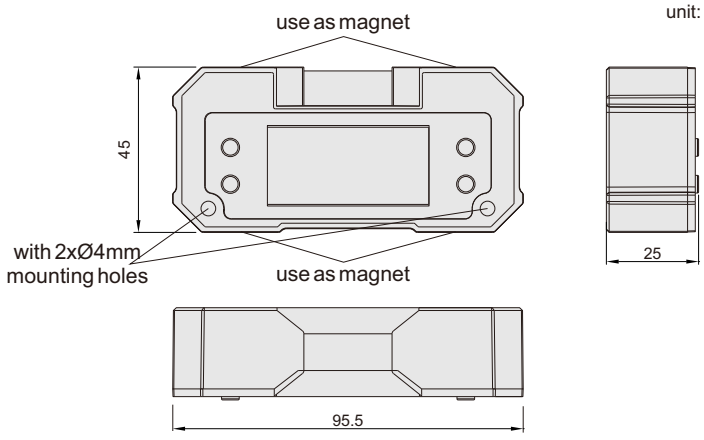

Code		730-360-01
Range	X axis	4x90°
	X-Y axis	±60°
Resolution		0.1°
Accuracy	X axis	±0.2°
	X-Y axis	±0.3°
Repeatability		0.1°

Angle measuring

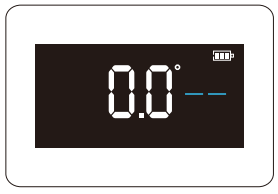

Slope measuring



Use as level

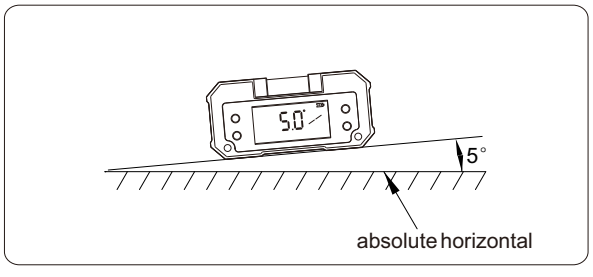

X-Y axis measurement

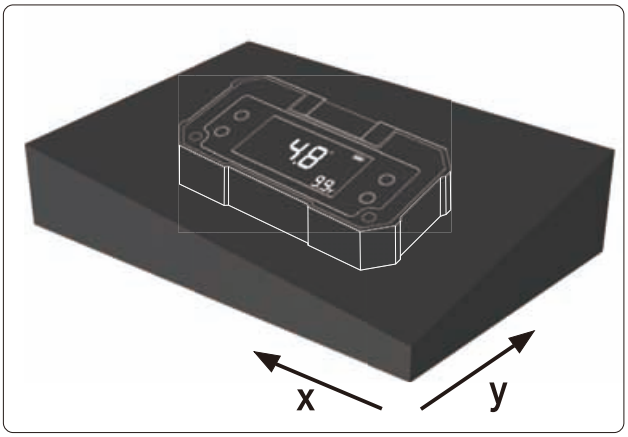

Use as protractor

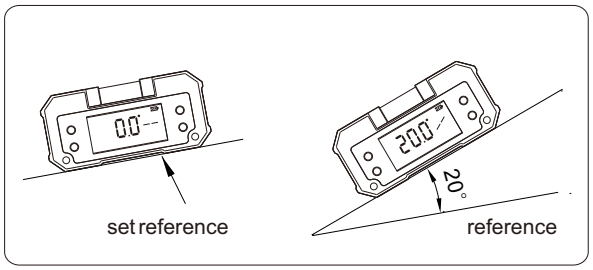

SERIES 725 DIGITAL LEVEL

AAA

- Used as level and slope meter
- Buttons:
  725-360-04: on/off, INC, ABS, hold, backlight
  725-360-01 and **725-360-10**: on/off, ABS, hold, alarm, unit, backlight
- With vertical and horizontal vials
- Absolute horizontion reference can save in memory for ever
- Two AAA batteries
- Magnetic base
- Aluminum frame
- Adjust the display direction automatically



725-360-04

unit: mm

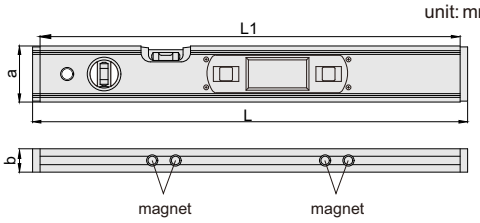



725-360-01

Use as level

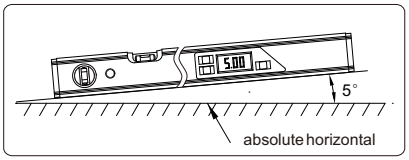

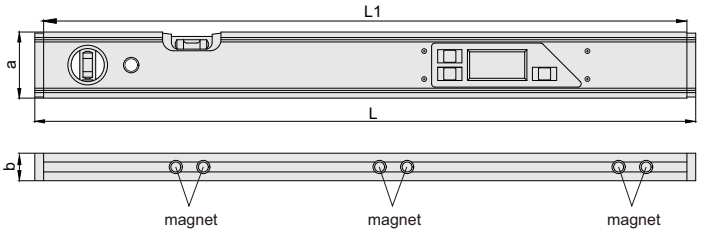

Measure the angle oftwo separate surfaces

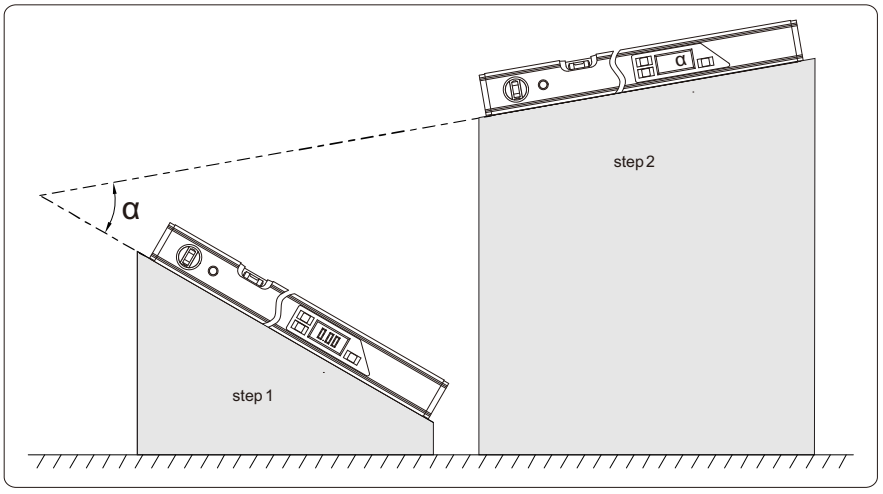

Use as protractor

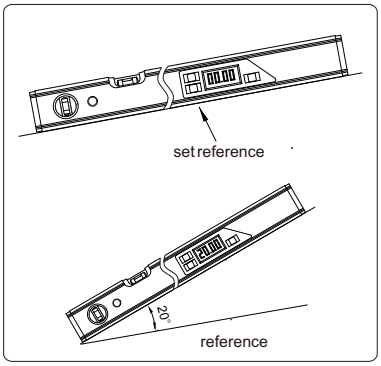

Code	Range	Resolution	Accuracy	Remark*	a	b	L1	L
725-360-04	0 - 360° (4x90°)	angle: 0.1°	±0.2°	both angle and slope are displayed (slope is calculated by angle)	50	21	400	416

Code	Range	Resolution	Accuracy	Remark*	a	b	L1	L
725-360-01	0 - 360° (4x90°)	at 0° and 90°: 0.05°; at others:0.1°	at 0° and 90°: +0.1°; at others:+0.2°	at 0° and 90° buzzer alarm	60	25	585	600
725-360-10	0 - 360° (4x90°)				60	25	984	1000

* mm/m=tan(°)x1000, for example: 2.3°=tan(2.3)x1000=40mm/m

160 CHAMFER GAUGE

- Measure 45° chamfer dimension
- Graduation 0.02mm
- Made of stainless steel
- Satin chrome plated reading surface

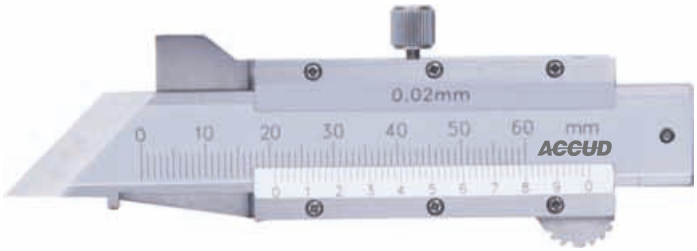

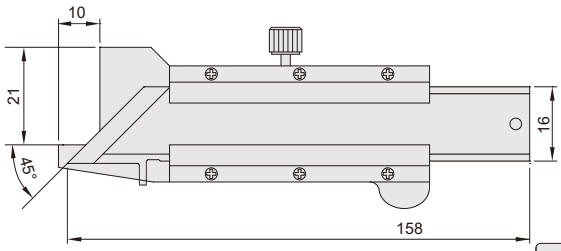

unit: mm

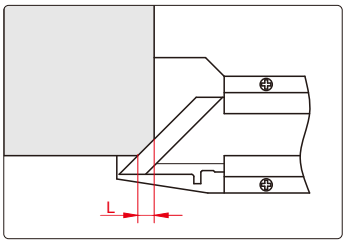

Code	Range	Accuracy
160-001-11	0-6mm	±0.06mm

SERIES 160 CHAMFER GAUGE

- Measure α chamfer dimension
- Graduation 0.02mm
- Made of stainless steel
- Satin chrome plated reading surface

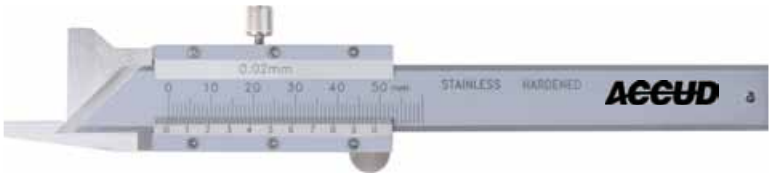

160-010-12

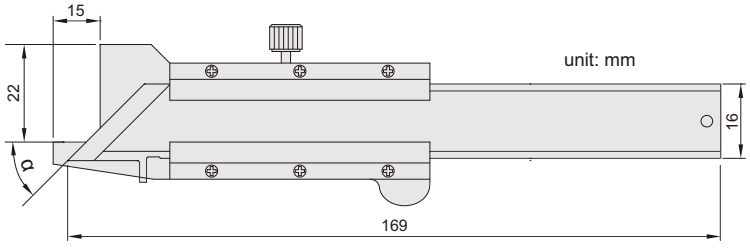

unit: mm

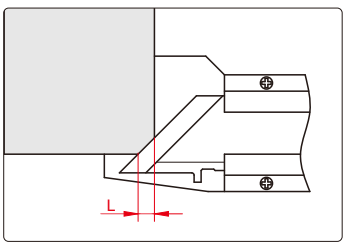

Code	Range	Accuracy	Chamfer(α)
160-010-11	0-10mm	±0.06mm	30°
160-010-12	0-10mm	±0.06mm	45°
160-010-13	0-10mm	±0.06mm	60°

SERIES 163 DIGITAL CHAMFER GAUGE

Data output | CR2032

- Measure α chamfer dimension
- Resolution: 0.01mm/0.0005"
- Buttons: on/off, zero, mm/in, INC
- Automatic power on/off
- Data output(cable code :100-03 or 100-04)
- Made of stainless steel



163-010-12

unit: mm

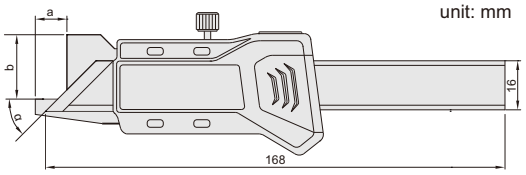

for internal chamfer measurement, diameter should be larger than ØD

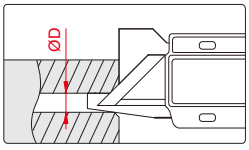

measure chamfer dimension

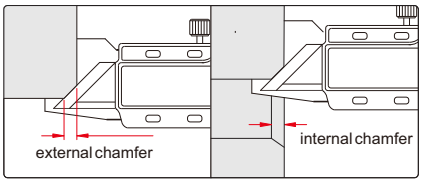

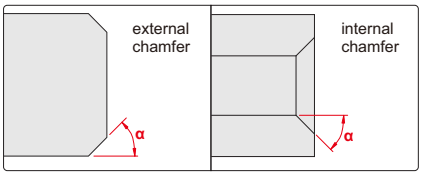

Code	Range	Accuracy	Chamfer(α)	a	b	ØD
163-010-11	0-10mm/0-0.39"	±0.06mm	30°	15	22	8
163-010-12	0-10mm/0-0.39"	±0.06mm	45°	15	22	7
163-010-13	0-10mm/0-0.39"	±0.06mm	60°	14	21	7
163-010-15	0-10mm/0-0.39"	±0.06mm	15°	33	20	11
163-010-20	0-10mm/0-0.39"	±0.06mm	20°	33	20	11

SERIES 164 DIGITAL CHAMFER GAUGE

CR2032



164-001-11



164-002-11

unit: mm

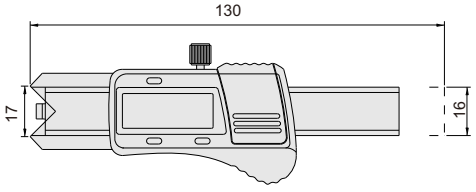

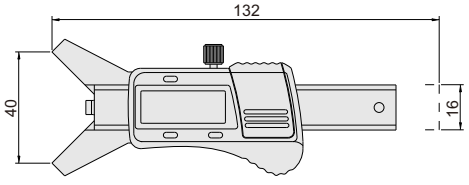

Set zero



- Resolution: 0.01mm
- Made of stainless steel

Measure chamfer radius

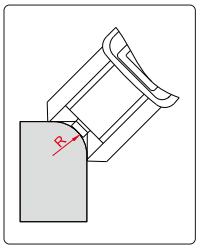

Measure leg length of 45° chamfer

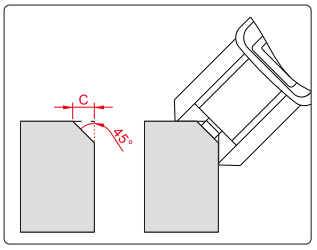

Code	Range of radius (R)	Range of leg length (C)	Accuracy
164-001-11	0-15mm	0-6mm	±0.05mm
164-002-11	0-30mm	0-18mm	±0.05mm

967 CHAMFER GAUGE

- To measure internal and external chamfers
- Made of stainless steel

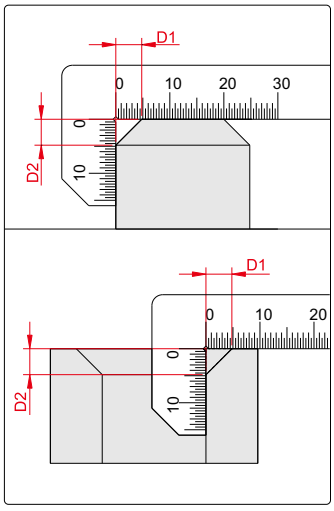

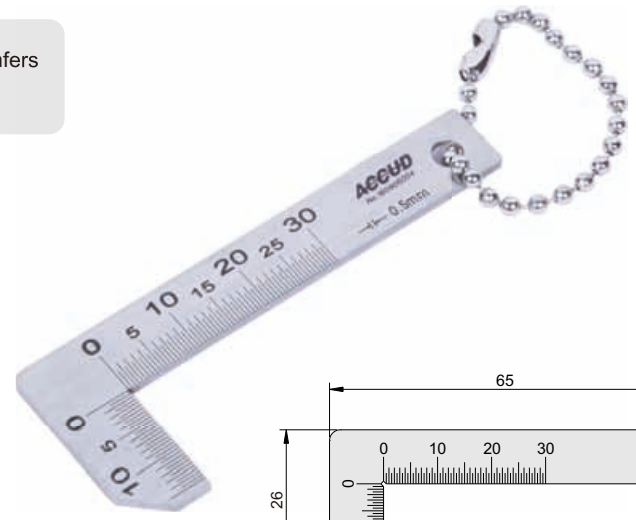

unit: mm

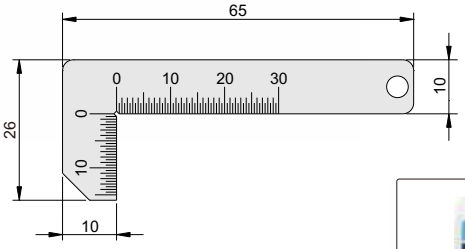

Package



Code	Graduation	Accuracy
967-001-11	0.5mm	±0.25mm

195 DIGITAL KEYWAY GAUGE

Data output

CR2032

- Measure the depth of keyway
- Resolution: 0.01mm/0.0005"
- Buttons: on/off, zero, mm/in, INC
- Automatic power on/off
- Data output(cable code :100-03 or 100-04)
- Made of stainless steel



Measure

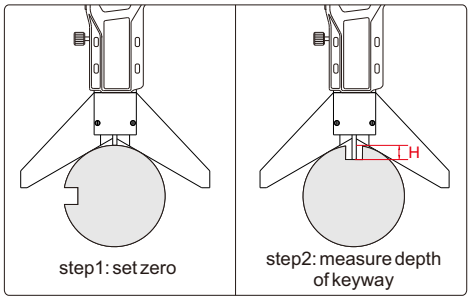

unit: mm

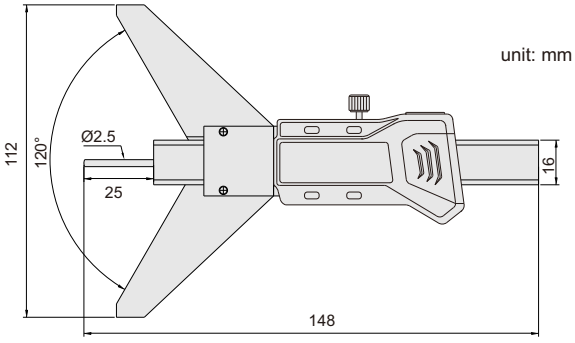

Code	Range	Accuracy
195-002-11	0-50mm/0-2"	±0.03mm

196 DIGITAL KEYWAY GAUGE

Data output | CR2032

- Measure the keyway depth of cylindrical workpieces with a diameter of Ø0-100mm
- Button: on/off, zero, mm/inch, ABS, data preset, change measuring direction
- Automatic power off
- Data output(cable code:200-03 or 200-04)
- Stainless steel base
- Pointed tip (Code: 270-006-21)

Measure

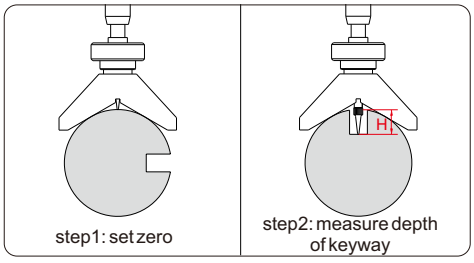



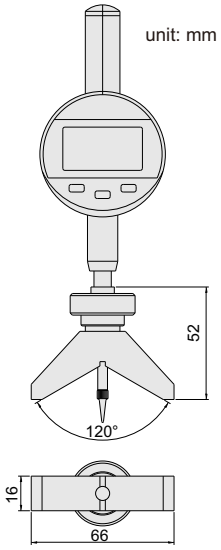

Code	Range	Resolution	Accuracy
196-001-11	0-25.4mm/0-1"	0.01mm/0.0005"	±0.02mm

998 VERNIER STEP GAUGE

- Measure the height difference of two surface
- Resolution: 0.05mm

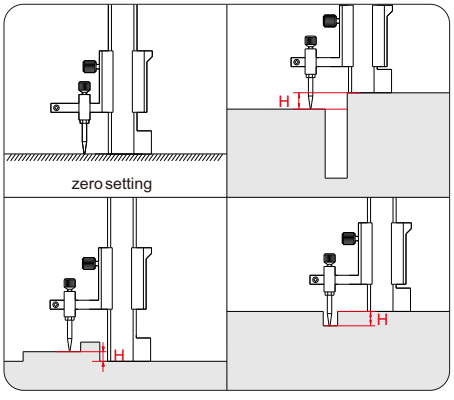

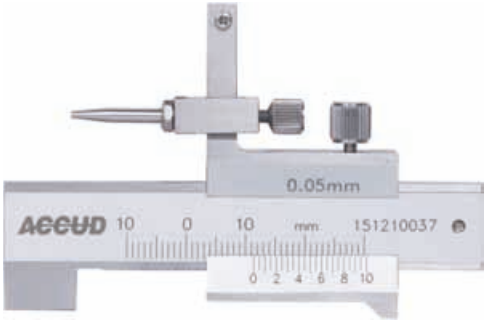

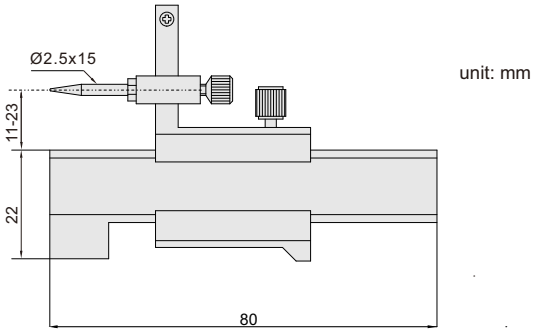

Code	Range	Accuracy
998-010-11	-10~+10mm	±0.05mm

999 DIGITAL STEP GAUGE

Data output | CR2032

- Measure the height difference of two surface
- Resolution: 0.01mm
- Buttons: on/off, zero, mm/in, INC
- Data output(cable code :100-03 or 100-04)
- Automatic power off
- Stainless steel base



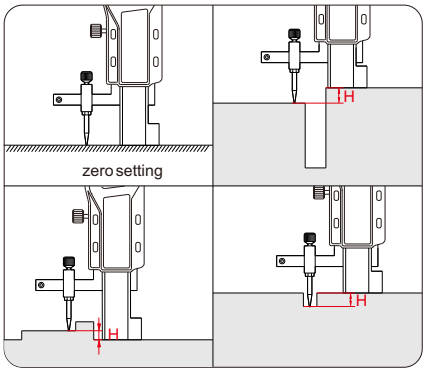

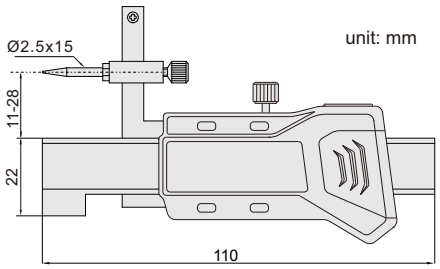

unit: mm

Code	Range	Accuracy
999-010-11	-10~+10mm	±0.05mm

SERIES 999 MINI DIGITAL HEIGHT GAUGE

Data output | CR2032

- Measure height difference of two surfaces (**999-020-12** suitable for surfaces with barrier, such as screw)
- Resolution: 0.01mm/0.0005"
- Buttons: on/off, zero, mm/in, INC
- Data output(cable code :100-03 or 100-04)
- Automatic power off
- Made of stainless steel

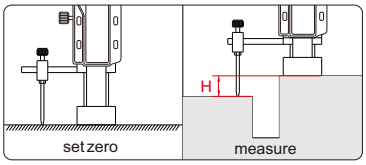

999-020-11

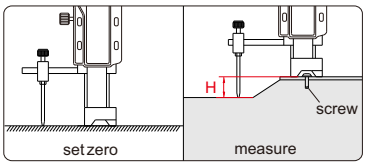

999-020-12



999-020-11



999-020-12

unit: mm

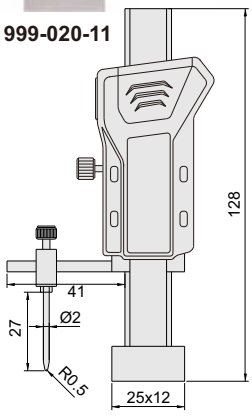

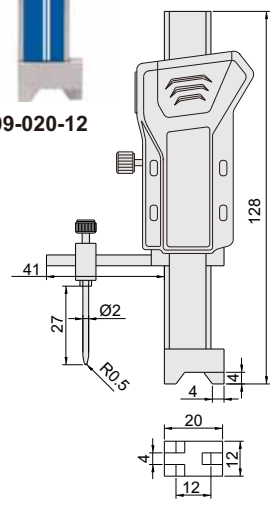

Code	Range	Accuracy
999-020-11	0-±20mm/0-±0.8"	±0.02mm
999-020-12	0-±20mm/0-±0.8"	±0.02mm

437 STEP AND GAP GAUGE

Data output | CR2032

- Measure step height and gap width
- Resolution: 0.01mm/0.0005"
- Buttons: on/off, zero, mm/in, INC
- Automatic power on/off
- Data output(cable code :100-03 or 100-04)
- Made of stainless steel
- Supplied with zero setting block



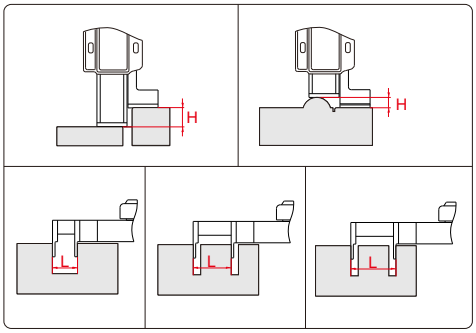

unit: mm

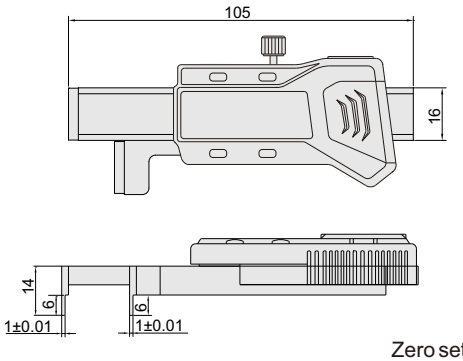

Zero setting block**(included)**

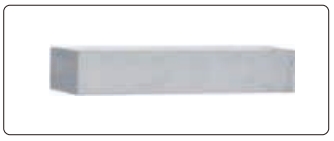

Code	Range	Accuracy
437-001-11	0-12.7mm/0-0.5"	±0.03mm

438 DIAL HEIGHT GAUGE

- Measure height difference of two surfaces



Application

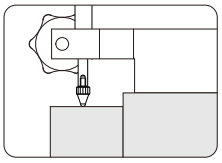

unit: mm

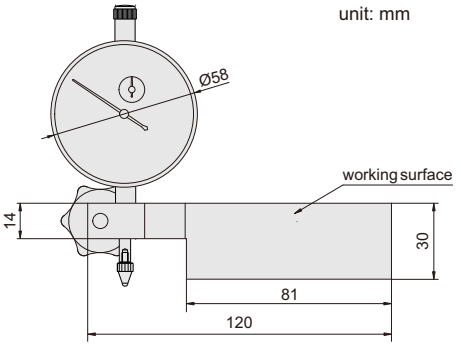

Code	Range	Dial indicator stroke	Dial indicator graduation	Accuracy
438-010-11	0-±5mm	10mm	0.01mm	17μm

SERIES 485 BASE FOR HEIGHT GAUGE

- Measure height difference of two surfaces
- Aluminum alloy material
- Hardness HRC20



485-000-00



485-012-11S



485-010-11

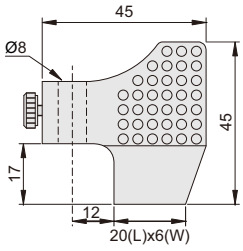

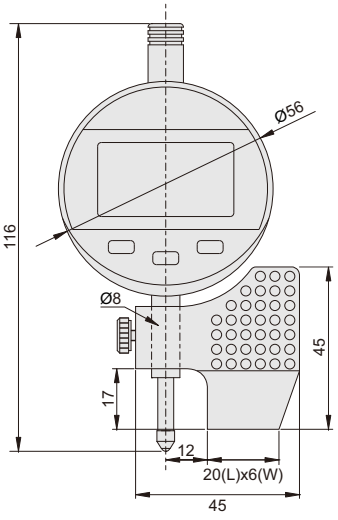

unit: mm

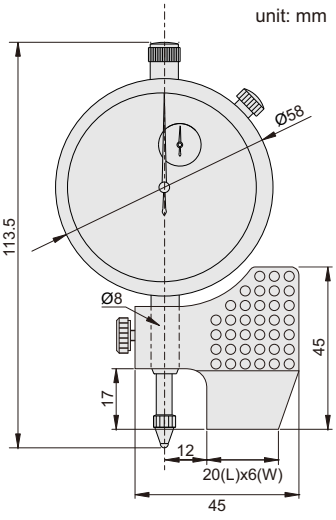

measure raised

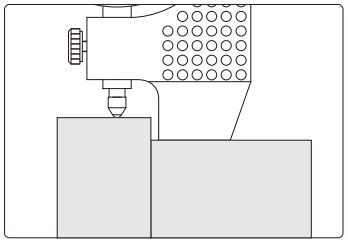

measure sinked

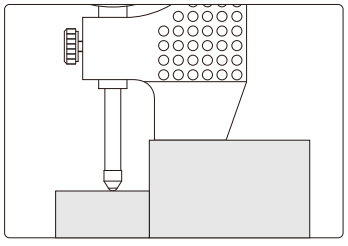

Code
485-000-00

Code	Range(Adjustable)	Digital indicator range	Digital indicator resolution	Accuracy
485-012-11S	0-±10mm/0-±0.4"(raised or sinked)	12.7mm-0.5"	0.01mm/0.0005"	±0.02mm

Code	Range(Adjustable)	Dial indicator range	Dial indicator graduation	Accuracy
485-010-11	0-±5mm(raised or sinked)	10mm	0.01mm	±0.02mm

911 FEELER

- Meets DIN2275
- Accuracy: ±(3+T/80)μm, T is the thickness of leaves , unit: μm
- Made of hardened spring steel



unit: mm

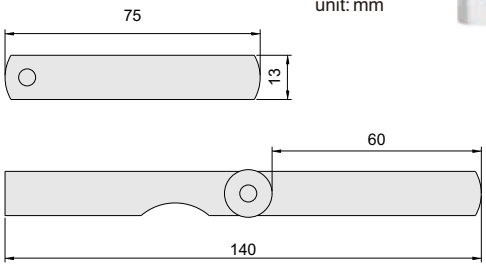

Package



Code	Range	Quantity	Leaves thickness (mm)
911-100-25	0.04 - 1.00mm	25	0.04, 0.05, 0.06, 0.07, 0.08, 0.09, 0.10, 0.15, 0.20, 0.25, 0.30, 0.35, 0.40, 0.45, 0.50, 0.55, 0.60, 0.65, 0.70, 0.75, 0.80, 0.85, 0.90, 0.95, 1.00

SERIES 912 FEELER

- Meets DIN2275
- Accuracy: ±(3+T/80)μm, T is the thickness of leaves, unit: μm
- Made of hardened spring steel



912-100-20

unit: mm

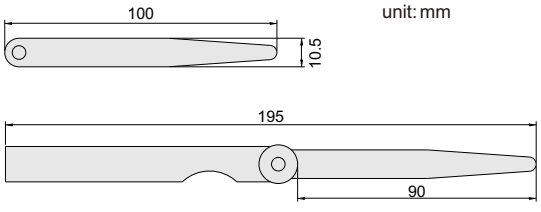

Package



Code	Range	Quantity	Leaves thickness (mm)
912-050-13	0.03 - 0.50mm	13	0.03, 0.04, 0.05, 0.06, 0.07, 0.08, 0.09, 0.10, 0.15, 0.20, 0.30, 0.40, 0.50
912-100-13	0.05 - 1.00mm	13	0.05, 0.10, 0.15, 0.20, 0.25, 0.30, 0.40, 0.50, 0.60, 0.70, 0.80, 0.90, 1.00
912-100-17	0.02 - 1.00mm	17	0.02, 0.03, 0.04, 0.05, 0.06, 0.07, 0.08, 0.09, 0.10, 0.15, 0.20, 0.25, 0.30, 0.40, 0.50, 0.75, 1.00
912-100-20	0.05 - 1.00mm	20	0.05, 0.10, 0.15, 0.20, 0.25, 0.30, 0.35, 0.40, 0.45, 0.50, 0.55, 0.60, 0.65, 0.70, 0.75, 0.80, 0.85, 0.90, 0.95, 1.00
912-100-32	0.03 - 1.00mm	32	0.03, 0.04, 0.05, 0.06, 0.07, 0.08, 0.09, 0.10, 0.13, 0.15, 0.18, 0.20, 0.23, 0.25, 0.28, 0.30, 0.33, 0.35, 0.38, 0.40, 0.45, 0.50, 0.55, 0.60, 0.63, 0.65, 0.70, 0.75, 0.80, 0.85, 0.90, 1.00
912-200-15	0.05 - 2.00mm	15	0. 05, 0.10, 0.15, 0.20, 0.25, 0.30, 0.40, 0.50, 0.60, 0.70, 0.80, 0.90, 1.00, 1.50, 2.00

SERIES 913/914/915 FEELER

- Meets DIN2275
- Accuracy: ±(3+T/80)μm, T is the thickness of leaves , unit: μm
- Made of hardened spring steel

913-100-20

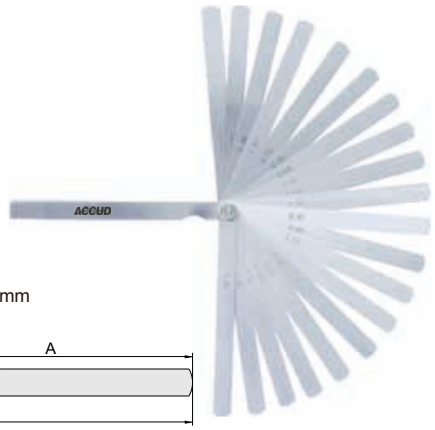

L	A	B
150	135	295
200	185	395
300	285	590

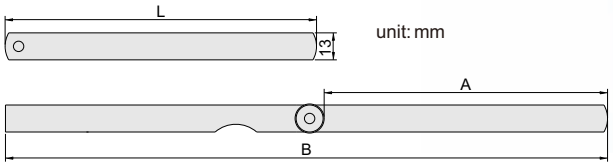

unit: mm

Code	Range	Quantity	Leaves thickness (mm)	L
913-100-13	0.05 - 1.00mm	13	0.05, 0.10, 0.15, 0.20, 0.25, 0.30, 0.40, 0.50, 0.60, 0.70, 0.80, 0.90, 1.00	150
914-100-13	0.05 - 1.00mm	13		200
915-100-13	0.05 - 1.00mm	13		300
913-100-17	0.02 - 1.00mm	17	0.02, 0.03, 0.04, 0.05, 0.06, 0.07, 0.08, 0.09, 0.10, 0.15, 0.20, 0.25, 0.30, 0.40, 0.50, 0.75, 1.00	150
914-100-17	0.02 - 1.00mm	17		200
915-100-17	0.02 - 1.00mm	17		300
913-100-20	0.05 - 1.00mm	20	0.05, 0.10, 0.15, 0.20, 0.25, 0.30, 0.35, 0.40, 0.45, 0.50, 0.55, 0.60, 0.65, 0.70, 0.75, 0.80, 0.85, 0.90, 0.95, 1.00	150
914-100-20	0.05 - 1.00mm	20		200
915-100-20	0.05 - 1.00mm	20		300

SERIES 916 FEELER TAPE

- Used to check the spacing thickness
- Made of hardened alloy steel
- Length 5m
- Width 13mm



916-002-01

Code	Thickness	Accuracy
916-001-01	0.01mm	±3μm
916-002-01	0.02mm	±4μm
916-003-01	0.03mm	±4μm
916-004-01	0.04mm	±4μm
916-005-01	0.05mm	±4μm
916-006-01	0.06mm	±4μm
916-007-01	0.07mm	±5μm
916-008-01	0.08mm	±5μm
916-009-01	0.09mm	±5μm
916-010-01	0.10mm	±5μm

Code	Thickness	Accuracy
916-015-01	0.15mm	±5μm
916-018-01	0.18mm	±7μm
916-020-01	0.20mm	±8μm
916-025-01	0.25mm	±9μm
916-030-01	0.30mm	±9μm
916-035-01	0.35mm	±11μm
916-040-01	0.40mm	±12μm
916-045-01	0.45mm	±12μm
916-050-01	0.50mm	±14μm
916-055-01	0.55mm	±14μm

Code	Thickness	Accuracy
916-060-01	0.60mm	±14μm
916-065-01	0.65mm	±14μm
916-070-01	0.70mm	±17μm
916-075-01	0.75mm	±17μm
916-080-01	0.80mm	±19μm
916-085-01	0.85mm	±19μm
916-090-01	0.90mm	±22μm
916-095-01	0.95mm	±22μm
916-100-01	1.00mm	±24μm

917 INCH FEELER GAUGE

- .010" is made of brass, others are made of hardened alloy steel
- Each blade is marked with inch/metric size



Code	Range	Quantity of leaves
917-035-31	.0015"~.035"	32

Thickness of leaves included	Accuracy
.010" (brass)	±.00039"
.0015", .002"	±.0002"
.0025"~ .007"	±.00028"
.008", .009"	±.00035"
.010", .011"	±.00039"
.012", .013"	±.00047"
.014", .015"	±.00051"
.016", .017"	±.00055"
.018", .019"	±.00059"
.020", .021"	±.00067"
.022", .023"	±.00071"
.024", .025", .026"	±.00075"
.028"	±.00091"
.030"	±.00094"
.032", .035"	±.00102"

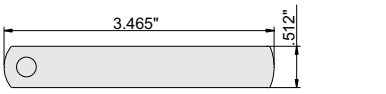

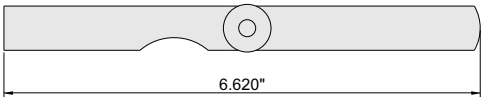

Package



919 OFFSET DUAL SCALE FEELER GAUGE

- Bend end
- Blade: length 4"
- Each blade is marked with imperial/metric size
- Made of hardened spring steel



unit: mm

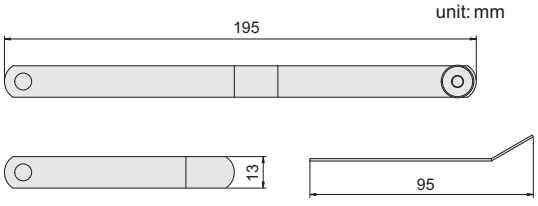

Code	Range	Quantity	Leaves thickness
919-030-26	0.005-0.020"	26	.005(.127mm), .006(.152mm), .007(.178mm), .008(.203mm), .009(.229mm), .010(.254mm), .011(.279mm), .012(.305mm), .013(.330mm), .014(.356mm), .015(.381mm), .016(.406mm), .017(.432mm), .018(.457mm), .019(.483mm), .020(.508mm), .021(.533mm), .022(.559mm), .023(.584mm), .024(.610mm), .025(.635mm), .026(.660mm), .027(.686mm), .028(.711mm), .029(.737mm), .030(.762mm)

SERIES 921 PITCH GAUGE

- Measure the pitch of thread
- Accuracy: ±0.07mm
- Made of medium carbon steel



921-012-16

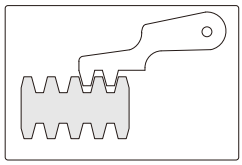

Code	Range	Thread	Quantity	Leaves pitch(mm)
921-020-12	2 - 20mm	Tr30°	12	2, 3, 4, 5, 6, 7, 8, 9, 10, 12, 16, 20mm
921-012-16	1 - 12TPI	ACME29°	16	1, 1-1/3, 1-1/2, 1-3/4, 2, 2-1/2, 3, 3-1/2, 4, 5, 6, 7, 8, 9, 10, 12TPI

SERIES 922/923/924/925 PITCH GAUGE

- Measure the pitch of thread
- Accuracy: ±0.07mm
- Made of medium carbon steel

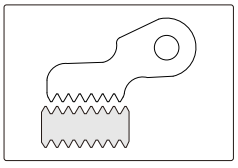



922-007-22

Package



METRIC 60° SCREW

Code	Range	Quantity	Leaves pitch
922-007-22	0.4 - 7.0mm	22	0.4, 0.5, 0.6, 0.7, 0.75, 0.8, 0.9, 1, 1.25, 1.5, 1.75, 2, 2.5, 3, 3.5, 4, 4.5, 5, 5.5, 6, 6.5, 7mm
922-007-24	0.25 - 7.0mm	24	0.25, 0.3, 0.35, 0.4, 0.5, 0.7, 0.75, 0.8, 0.9, 1, 1.25, 1.5, 1.75, 2, 2.5, 3, 3.5, 4, 4.5, 5, 5.5, 6, 6.5, 7mm
922-006-24	0.25 - 6.0mm	24	0.25, 0.3, 0.35, 0.4, 0.45, 0.5, 0.6, 0.7, 0.75, 0.8, 0.9, 1, 1.25, 1.5, 1.75, 2, 2.5, 3, 3.5, 4, 4.5, 5, 5.5, 6mm
922-025-28	0.25 - 2.5mm	28	0.25, 0.3, 0.35, 0.4, 0.45, 0.5, 0.55, 0.6, 0.65, 0.7, 0.75, 0.8, 0.85, 0.9, 1.0, 1.1, 1.2, 1.25, 1.3, 1.4, 1.5, 1.6, 1.7, 1.75, 1.8, 1.9, 2.0, 2.5mm

UNIFIED 60° SCREW

Code	Range	Quantity	Leaves pitch
923-042-30	4 - 42TPI	30	4, 4-1/2, 5, 5-1/2, 6, 7, 8, 9, 10, 11, 11-1/2, 12, 13, 14, 15, 16, 18, 20, 22, 24, 26, 27, 28, 30, 32, 34, 36, 38, 40, 42TPI

WHITWORTH 55° SCREW

Code	Range	Quantity	Leaves pitch
924-042-30	4 - 42TPI	30	4, 4-1/2, 5, 5-1/2, 6, 7, 8, 9, 10, 11, 12, 13, 14, 15, 16, 18, 19, 20, 22, 24, 26, 27, 28, 30, 32, 34, 36, 38, 40, 42TPI
924-062-28	4 - 62TPI	28	4, 4-1/2, 5, 6, 7, 8, 9, 10, 11, 12, 13, 14, 16, 18, 19, 20, 22, 24, 25, 26, 28, 30, 32, 36, 40, 48, 60, 62TPI

METRIC 60° AND WHITWORTH 55° SCREW

Code	Range	Quantity	Leaves pitch
925-062-52	0.25 - 6.0mm and 4 - 62TPI	52	pitch of **922-006-24** and **924-062-28**

METRIC 60° AND UNIFIED 60° SCREW

Code	Range	Quantity	Leaves pitch
925-642-52	0.4 - 7.0mm and 4 - 42TPI	52	pitch of **922-007-22** and **923-042-30**

SERIES 926 CENTER GAUGE

- Check the screw angle and picth
- Accuracy: ±30'
- Made of stainless steel

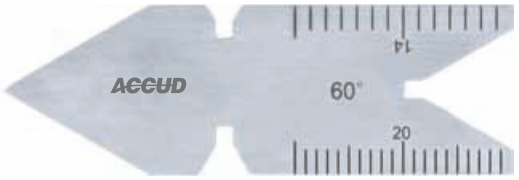

926-060-02

Package



unit: mm

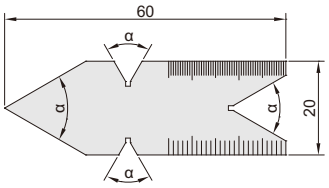

Code	Screw type	Angle(α)	Graduation
926-060-01	metric 60°	60°	0.5mm and 1mm
926-060-02	unified 60°	60°	front side: 1/14"and 1/20", reverse side: 1/24" and 1/32"
926-055-01	whitworth 55°	55°	front side: 1/14"and 1/20", reverse side: 1/24" and 1/32"

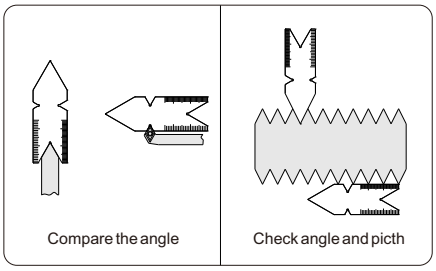

SERIES 927 THREAD GAUGE

- To check and set screw cutting tools
- Angle accuracy: ±10min.
- Made of medium carbon steel

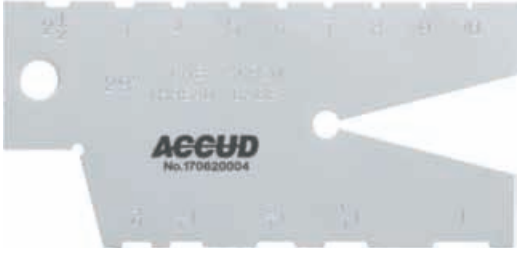

927-008-01

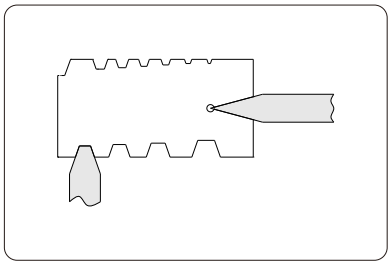

unit: mm

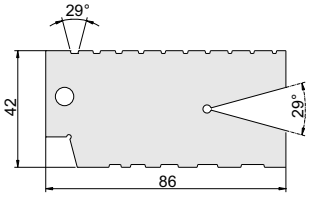

927-008-01

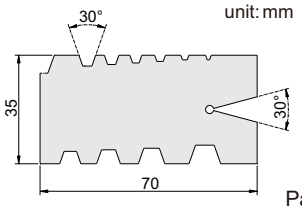

927-012-01

Package



Code	Range	Thread type	Pitch
927-008-01	1 - 10TPI	ACME 29°	1, 1-1/3, 1-1/2, 1-3/4, 2, 2-1/2, 3, 4, 5, 6, 7, 8, 9, 10TPI
927-012-01	2 - 12mm	Tr 30°	2, 3, 4, 5, 6, 7, 8, 9, 10, 12mm

933 ANGLE GAUGE

- To check and set screw cutting tools
- Angle accuracy: ±10min.
- Made of medium carbon steel



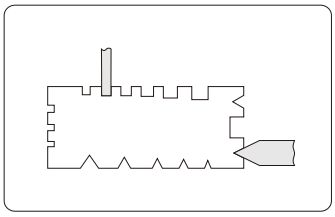

unit:mm

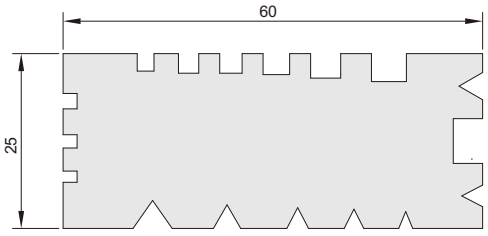

Package



Code	Pitch	Angle(α)
933-008-11	2, 2.5, 3, 3.5, 4, 4.5, 5, 6, 7, 8TPI	45°, 53.8°, 55°, 60°, 70°

930 ANGLE GAUGE

- Made of stainless steel

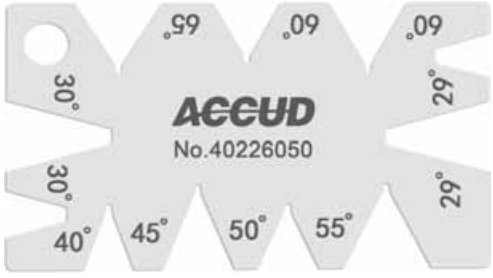

Check the angle of screw cutting tools

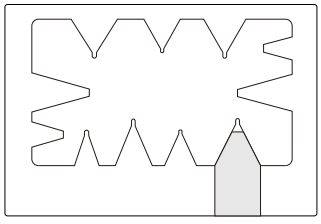

unit: mm

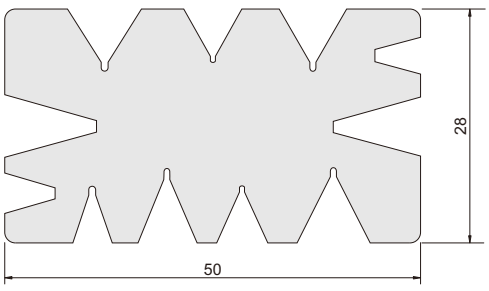

Package



Code	Range	Accuracy
930-001-01	29°, 30°, 40°, 45°, 50°, 55°, 60°, 65°	±10'

934 ANGLE GAUGE

- Made of stainless steel



Check the angle of screw cutting tools

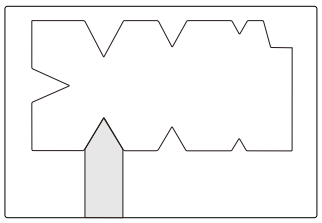

unit: mm

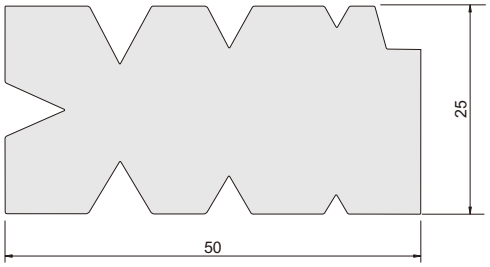

Package



Code	Range	Accuracy
934-001-11	55°, 60°, 47 1/2°BA, 14 1/2°ACME	±10'

931 ANGLE GAUGE

- Check the coangle
- Accuracy: ±30'



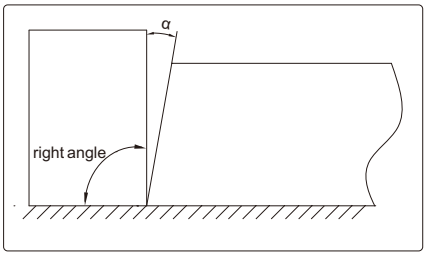

Code	Range	Quantity	Leaves angle(α)
931-045-20	1°-45°	20	1°, 2°, 3°, 4°, 5°, 6°, 7°, 8°, 9°, 10°, 12°, 14°, 16°, 18°, 20°, 25°, 30°, 35°, 40°, 45°

932 ANGLE GAUGE SET

- Each blade checks primary, 1/2 primary and complementary angles

Code	Quantity of leaves	Accuracy
932-018-01	18	±10'

Primary angle	½ primary angle	Complementary angle
5°	2°30'	175°
10°	5°	170°
15°	7°30'	165°
20°	10°	160°
25°	12°30'	155°
30°	15°	150°
35°	17°30'	145°
40°	20°	140°
45°	22°30'	135°
50°	25°	130°
55°	27°30'	125°
60°	30°	120°
65°	32°30'	115°
70°	35°	110°
75°	37°30'	105°
80°	40°	100°
85°	42°30'	95°
90°	45°	90°



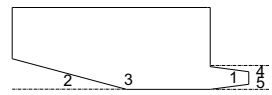

Angle 1, 2 are primary angle
Angle 3 is complementary angle
Angle 4, 5 are 1/2 primary angle

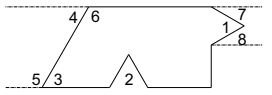

Angle 1, 2, 3, 4 are primary angle
Angle 5, 6 are complementary angle
Angle 7, 8 are 1/2 primary angle

SERIES 941 RADIUS GAUGE

- Check the radius
- With concave and convex surface in each size

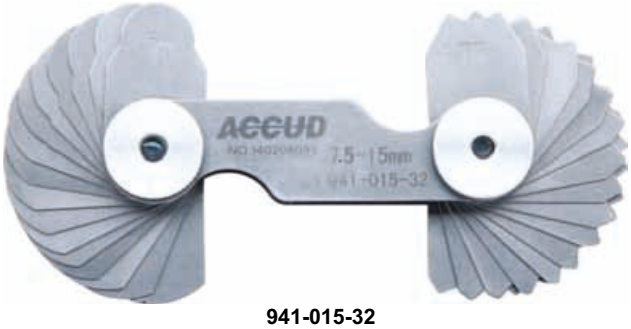

941-015-32

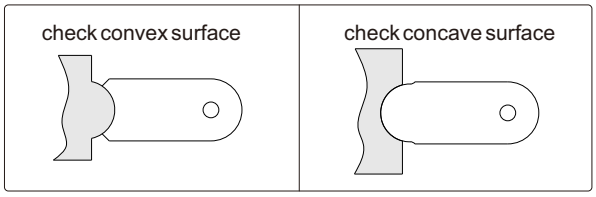

Code	Range	Quantity	Accuracy	Leaves radius (mm)
941-007-34	1 - 7mm	17x2	±0.03mm	1, 1.25, 1.5, 1.75, 2, 2.25, 2.5, 2.75, 3, 3.5, 4, 4.5, 5, 5.5, 6, 6.5, 7
941-015-32	7.5 - 15mm	16x2	±0.035mm	7.5, 8, 8.5, 9, 9.5, 10, 10.5, 11, 11.5, 12, 12.5, 13, 13.5, 14, 14.5, 15
941-025-30	15.5 - 25mm	15x2	±0.042mm	15.5, 16, 16.5, 17, 17.5, 18, 18.5, 19, 19.5, 20,21, 22, 23, 24, 25

Package



942 RADIUS GAUGE

- Each piece has 2 concave and 3 convex surfaces
- With handle
- Accuracy: ±0.05mm





Handle

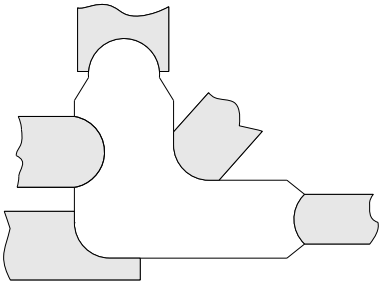

2 concave and 3 convex surfaces

Code	Range	Quantity	Included radius(mm)
942-013-26	0.5 - 13mm	26	0.5, 1, 1.5, 2, 2.5, 3, 3.5, 4, 4.5, 5, 5.5, 6, 6.5, 7, 7.5, 8, 8.5, 9, 9.5, 10, 10.5, 11, 11.5, 12, 12.5, 13

951 TELESCOPING GAUGE SET



- 6 gauges per set
- For quick measurement of inside diameter of holes and width of slots
- Satin chrome finish

unit: mm

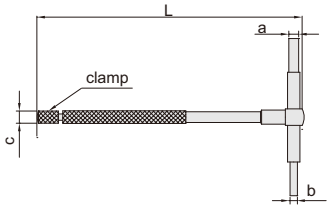

Code	Range	Gauge included	L	a	b	c
951-006-01	8-150mm	8-12.7mm	115	Ø3.9	Ø2.9	Ø4.7
		12.7-19mm	115	Ø5.3	Ø3.8	Ø4.7
		19-32mm	115	Ø5.3	Ø3.8	Ø4.7
		32-54mm	137	Ø7.5	Ø5.8	Ø6.1
		54-90mm	137	Ø7.5	Ø5.8	Ø6.1
		90-150mm	137	Ø7.5	Ø5.8	Ø6.1

Use

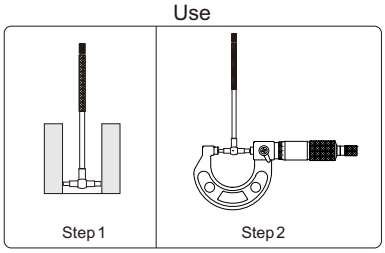

952 SMALL HOLE GAUGE SET

- 4 gauges per set
- For small holes, slots and grooves, etc.
- Satin chrome finish



unit: mm

Ball type



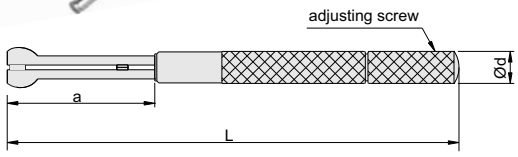

Use

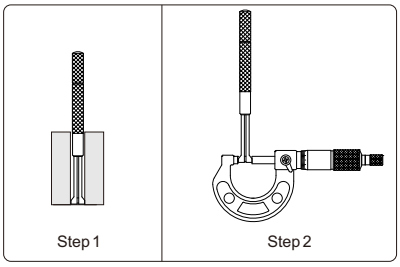

Code	Range	L	a	Ød
952-004-01	3-5mm	77	24	6
	5-7.5mm	77	25	6
	7.5-10mm	87	28.5	7
	10-13mm	92	32	7

952 SMALL HOLE GAUGE SET

- 4 gauges per set
- For small holes, slots and grooves, etc.
- Satin chrome finish



unit: mm

Flat type



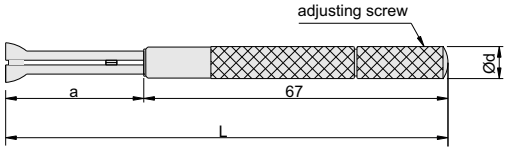

Use

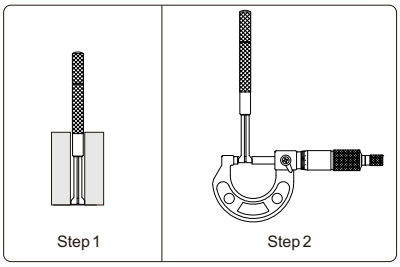

Code	Range	L	a	Ød
952-004-02	3-5mm	91	24	6
	5-7.5mm	98	31	6
	7.5-10mm	108	41	7
	10-13mm	109	42	7

SERIES 953 LONG HANDLE TELESCOPING GAUGE

- For quick measuring inside diameter of deep holes and width of slots
- Satin chrome finish



953-006-01

unit: mm

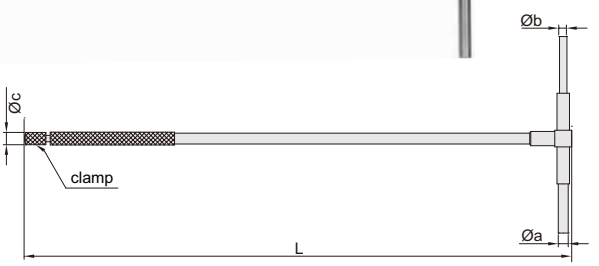

Code	Range	L	Øa	Øb	Øc
953-001-01	8-12.7mm	300	3.9	2.9	6.2
953-002-01	12.7-19mm	300	5.3	3.8	6.2
953-003-01	19-32mm	300	5.3	3.8	6.2
953-004-01	32-54mm	300	7.6	6.1	7.2
953-005-01	54-90mm	300	7.6	6.1	7.2
953-006-01	90-150mm	300	7.6	6.1	7.2

Use

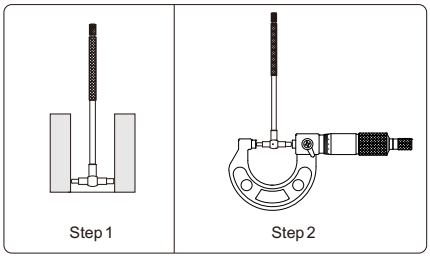

SERIES 963 DIGITAL TAPER GAUGE

Data output

CR2032



963-010-11

unit: mm

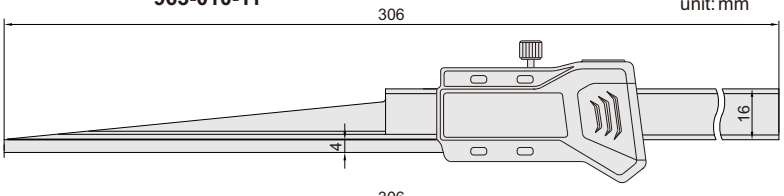

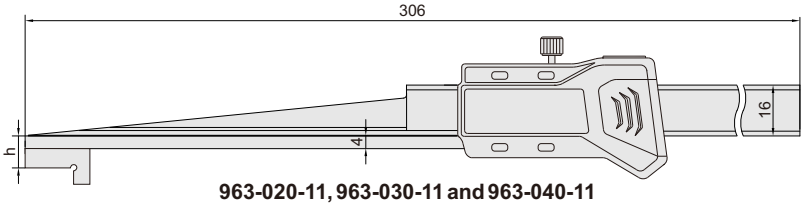

963-020-11, 963-030-11 and 963-040-11

- Measuring opening, slot width
- Resolution: 0.01mm/0.0005"
- Buttons: on/off, zero, mm/in, INC
- Data output(cabie code:100-03 or 100-04)
- Automatic power on/off
- Made of stainless steel

Measure slot width(reading/10)

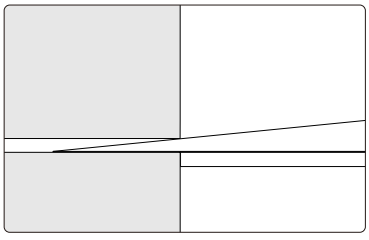

Code	Range	Accuracy	h
963-010-11	0.2-10mm/0.01-0.39"	±0.03mm	-
963-020-11	10-20mm/0.39-0.79"	±0.05mm	10
963-030-11	20-30mm/0.79-1.18"	±0.05mm	20
963-040-11	30-40mm/1.18-1.58"	±0.05mm	30

SERIES 961 TAPER GAUGE

- Measure the gap width
- Stain chrome plated reading surface
- Made of the stainless steel



961-010-05

unit: mm

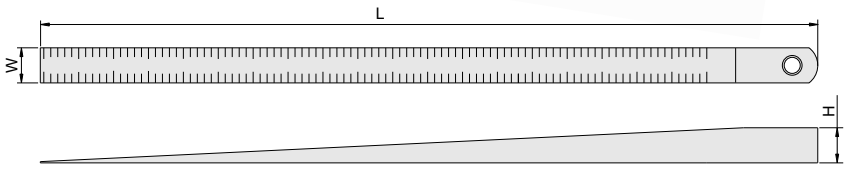

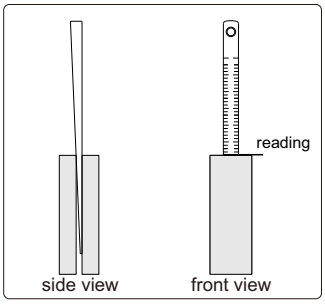

Code	Range	Graduation	Accuracy	L	W	H
961-004-05	0.2 - 4mm	0.05mm	±0.05mm	120	12	4.3
961-006-05	0.4 - 6mm	0.05mm	±0.05mm	166	11.5	6.5
961-010-05	0.5 - 10mm	0.05mm	±0.05mm	225	12.5	10.5
961-015-05	0.5 - 15mm	0.1mm	±0.05mm	184	11	16

SERIES 962 TAPER GAUGE

- Measure the groove width and hole size
- Made of the stainless steel

Package





962-015-05

front side reverse side

unit: mm

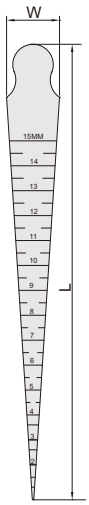

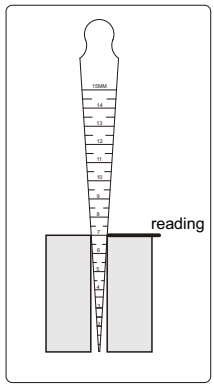

Code	Range	Graduation	Accuracy	L	W
962-015-05	0.8-15mm	0.1mm	±0.1mm	146	17
962-030-05	15-30mm	0.1mm	±0.1mm	159	30.4
962-045-05	30-45mm	0.1mm	±0.1mm	166	45.4
962-060-05	45-60mm	0.1mm	±0.1mm	170	60.5

962 TAPER GAUGE SET

- Include 4 pcs (1-7.5mm,7.5-14.5mm, 14.5-21.5mm,21.5-29mm)
- Measure opening slot width
- Made of stainless steel



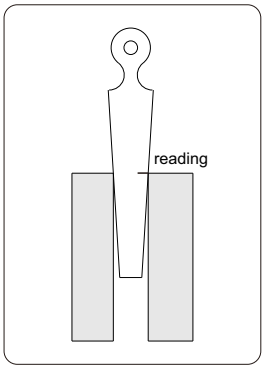

unit: mm

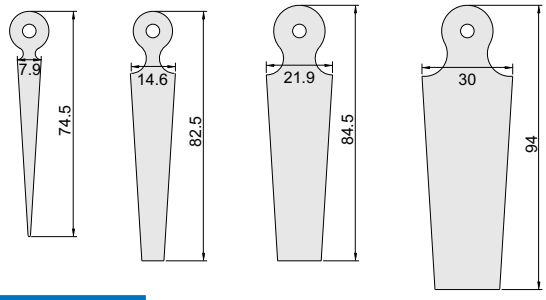

Code	Range	Graduation	Accuracy
962-029-41	1-29mm	0.1mm	±0.1mm

962 TAPER GAUGE SET



front side



reverse side

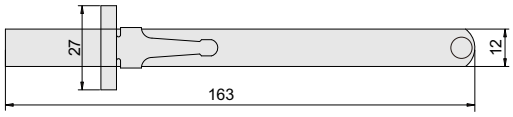

unit: mm

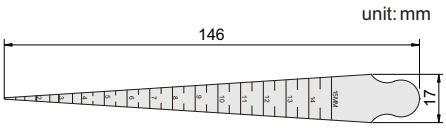

- Made of stainless steel

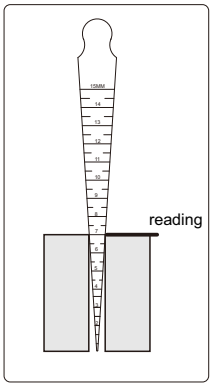

Code	Tool	Range	Graduation	Accuracy
962-909-02	taper gage	0.8-15mm	0.1mm	±0.1mm
	steel ruler	150mm/6"	1mm/1/64"	±0.15mm

SERIES 964 TAPER BORE GAUGE

- Quick measuring diameter of the bore
- Graduation: 0.1mm
- Hardened steel, HRC50-58
- Satin chrome plated surface
- Aluminium oxided handle

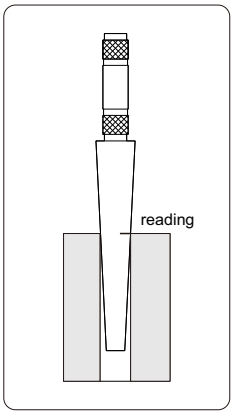



964-015-11

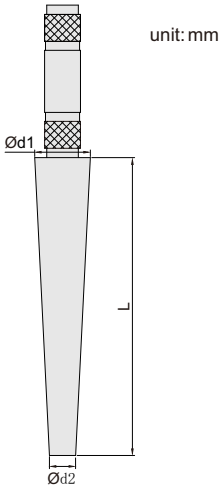

Code	Range	Accuracy	L	Ød1	Ød2
964-006-11	1-6.5mm	±0.05mm	62.5	7	0.8
964-015-11	3-15mm	±0.05mm	143	17	2.8
964-030-11	15-30mm	±0.05mm	165	31	14.7
964-045-11	30-45mm	±0.05mm	165	46	29.6
964-060-11	45-60mm	±0.05mm	167	61	44

970 DIGITAL WELDING GAUGE

- Buttons: zero, mm/inch, on/off
- Made of stainless steel



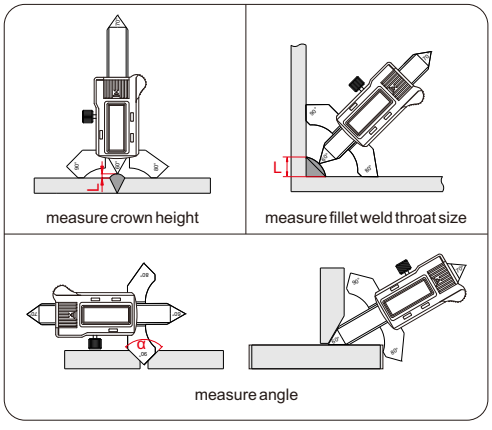

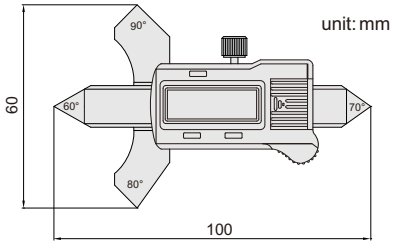

Code	Range	Accuracy	Resolution	Application
970-010-11	0 - 10mm	±0.03mm	0.01mm/0.0005"	measure crown height
	0 - 20mm	±0.1mm	0.01mm/0.0005"	measure fillet weld throat size
	60°, 70°, 80°, 90°	±1°	—	measure angle

971 WELDING GAUGE

- Made of stainless steel
- Stain chrome plated reading surface



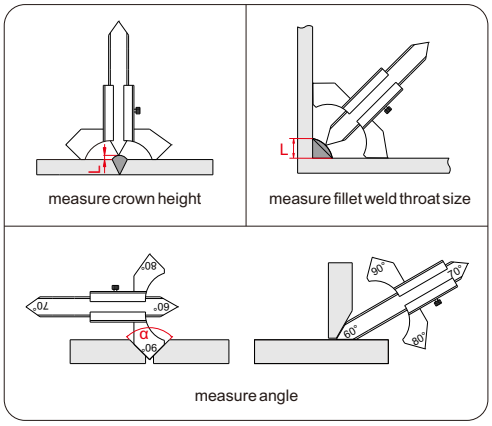

unit: mm

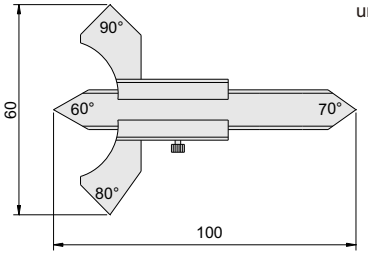

Code	Range	Graduation	Accuracy	Application
971-008-01	0 - 8mm	0.1mm	±0.1mm	measure crown height
	0 - 20mm	0.1mm	±0.3mm	measure fillet weld throat size
	60°, 70°, 80°, 90°	—	±1°	measure angle

972 WELDING GAUGE

- Double printing in front and reverse side
- Made of the stainless steel

unit: mm



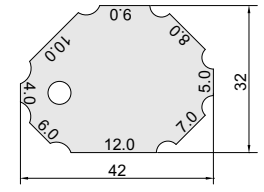

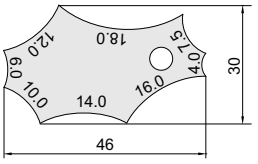

Package



Code	Leg height	Leg length	Accuracy
972-012-01	4, 5, 6, 7, 8, 9, 10, 12mm	4, 6, 7.5, 10, 12, 14, 16, 18mm	±0.5mm

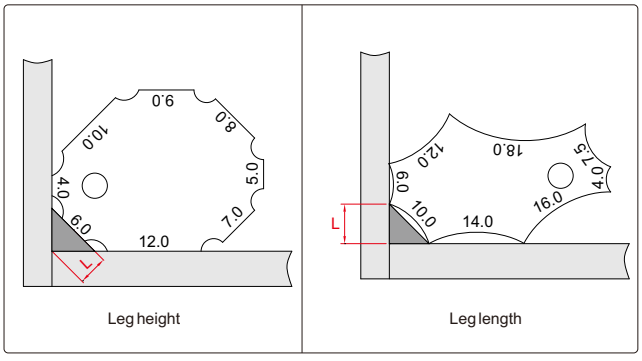

973 WELDING GAUGE

- Made of stainless steel



front side



reverse side

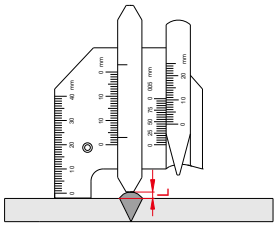

measure crown height

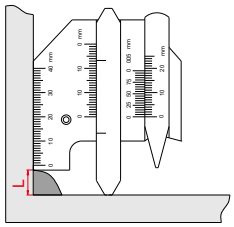

measure leg height

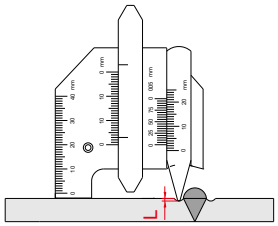

measure undercut depth

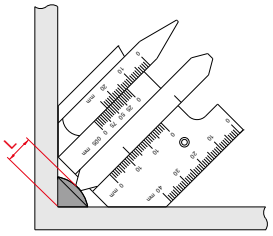

measure throat size

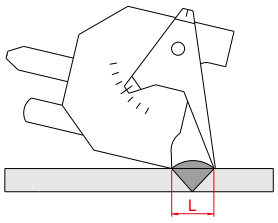

measure weld length

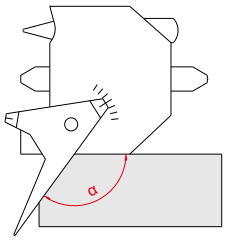

measure angle

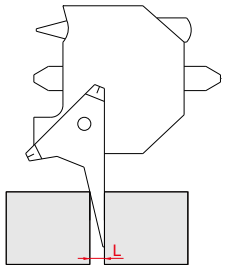

measure gap

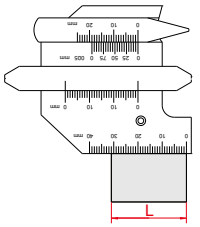

measure length

Code	Application	Range	Graduation	Accuracy
973-014-01	measure crown height	0 - 10mm	1mm	±0.5mm
	measure leg height	0 - 14mm	1mm	±0.5mm
	measure undercut depth	0 - 5mm	0.05mm	±0.05mm
	measure throat size	0 - 13mm	1mm	±0.5mm
	measure weld length	0 - 40mm	1mm	±1mm
	measure angle	90° - 150°	5°	±1°
	measure gap	0.5 - 5mm	1mm	±0.5mm
	measure length	0 - 40mm	1mm	±0.5mm

unit: mm

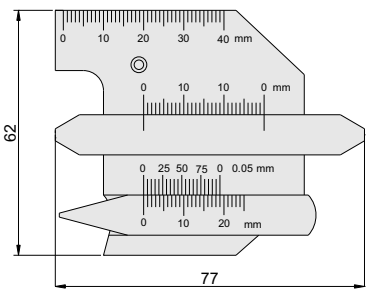

974 WELDING GAUGE

- Made of stainless steel
- Stain chrome plated surface

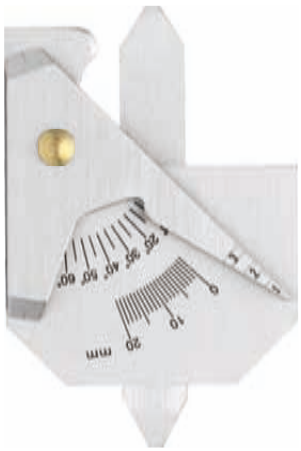

reverse side



front side

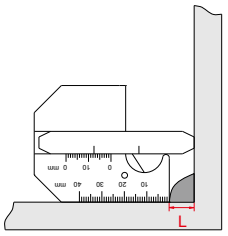

measure leg length

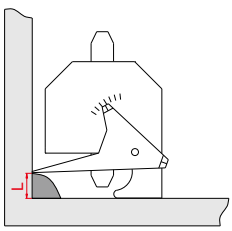

measure leg height

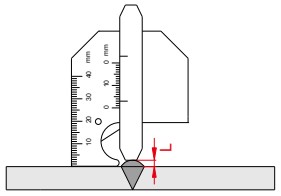

measure crown height

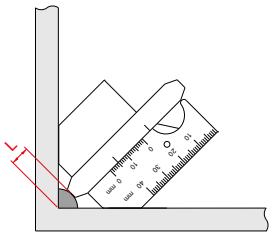

measure throat size

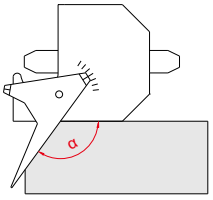

measure angle

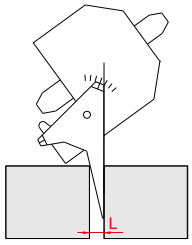

measure gap

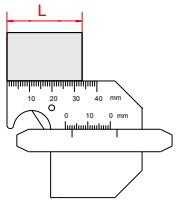

measure length

Code	Application	Range	Graduation	Accuracy
974-013-01	measure leg length	0 - 10mm	1mm	±0.3mm
	measure leg height	0 - 20mm	1mm	±0.3mm
	measure crown height	0 - 10mm	1mm	±0.3mm
	measure throat size	0 - 10mm	1mm	±0.3mm
	measure angle	0° - 60°	5°	±0.5°
	measure gap	1 - 3.5mm	0.5mm	±0.2mm
	measure length	0 - 40mm	1mm	±0.2mm

unit: mm

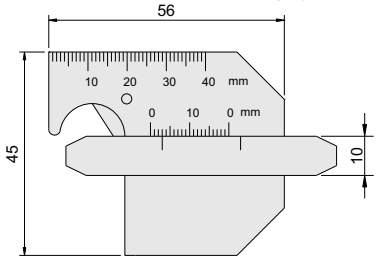

975 WELDING GAUGE

- Adjustable scale to compensate pointer wear
- Made of stainless steel

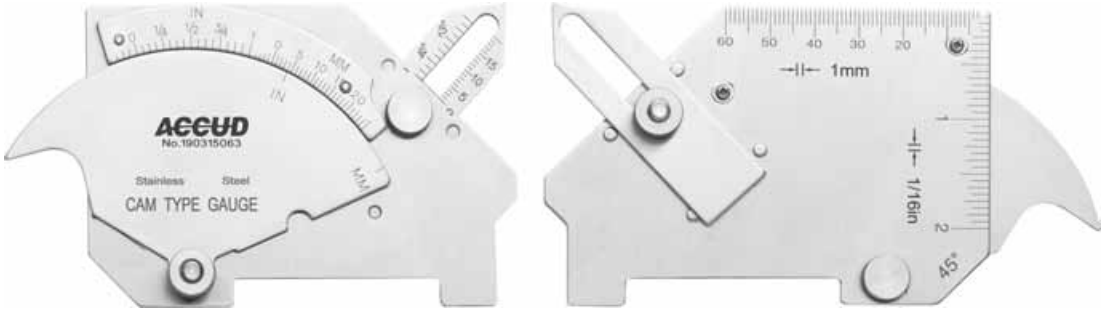

front side reverse side

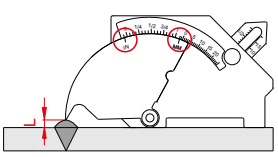

measure crown height

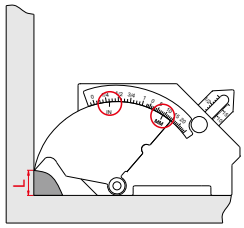

measure fillet weld leg height

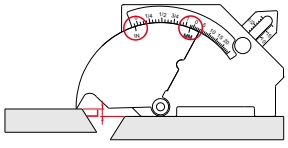

measure misalignment

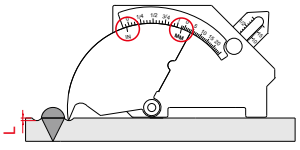

measure undercut depth

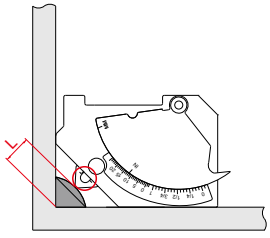

measure fillet weld throat size

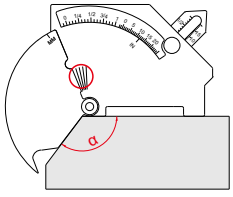

measure angle of preparation

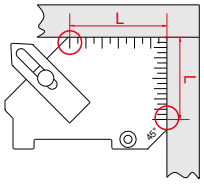

measure length

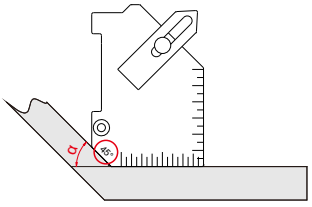

measure 45° angle

Code	Application	Range	Graduation	Accuracy
975-025-01	measure crown height	0 - 25mm (0 - 1")	1mm (1/16")	±0.5mm
	measure fillet weld leg height	0 - 25mm (0 - 1")	1mm (1/16")	±0.5mm
	measure misalignment	0 - 25mm (0 - 1")	1mm (1/16")	±0.5mm
	measure undercut depth	0 - 2mm (0 - 1/8")	1mm (1/16")	±0.5mm
	measure fillet weld throat size	0 - 20mm (0 - 3/4")	1mm (1/16")	±0.5mm
	measure angle of preparation	0 - 60°	5°	±1°
	measure length	0 - 60mm (0-2")	1mm (1/16")	±0.5mm
	measure 45° angle	—	—	±1°

unit: mm

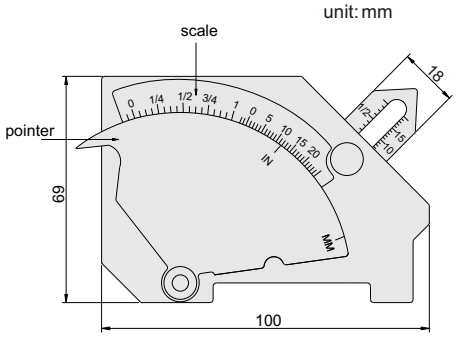

975 WELDING GAUGE

- Adjustable scale to compensate pointer wear
- Made of stainless steel



front side reverse side

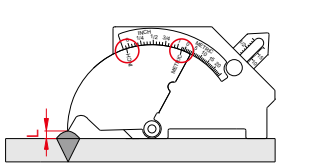

measure crown height

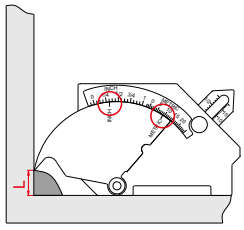

measure fillet weld leg height

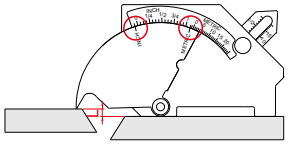

measure misalignment

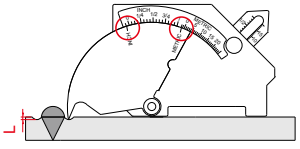

measure undercut depth

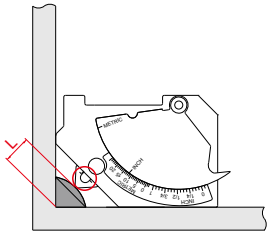

measure fillet weld throat size

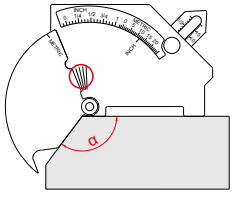

measure angle of preparation

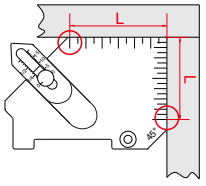

measure length

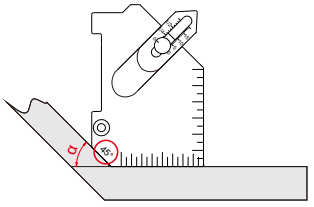

measure 45° angle

Code	Application	Range	Graduation	Accuracy
975-025-02	measure crown height	0 - 25mm (0 - 1")	1mm (1/16")	±0.5mm
	measure fillet weld leg height	0 - 25mm (0 - 1")	1mm (1/16")	±0.5mm
	measure misalignment	0 - 25mm (0 - 1")	1mm (1/16")	±0.5mm
	measure undercut depth	0 - 2mm (0 - 1/8")	1mm (1/16")	±0.5mm
	measure fillet weld throat size	0 - 20mm (0 - 3/4")	1mm (1/16")	±0.5mm
	measure angle of preparation	0 - 60°	5°	±1°
	measure length	0 - 60mm (0-2")	1mm (1/16")	±0.5mm
	measure 45° angle	—	—	±1°

unit: mm

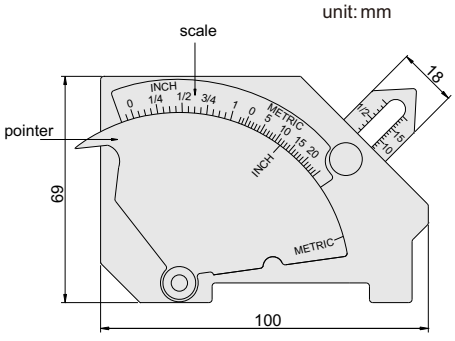

975 WELDING GAUGE

- Adjustable scale to compensate pointer wear
- Made of stainless steel



front side

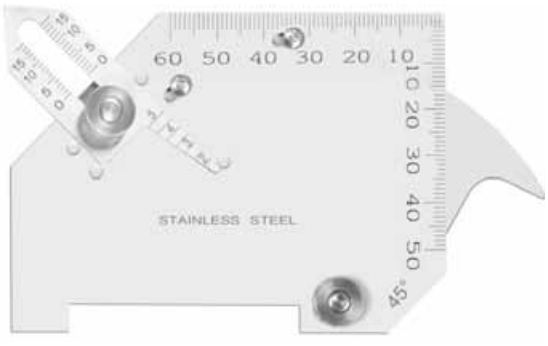

reverse side

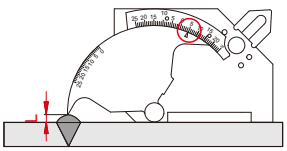

measure crown height

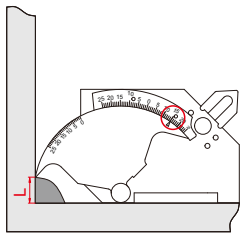

measure fillet weld leg height

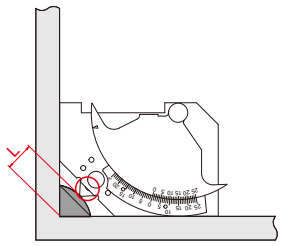

measure fillet weld throat size

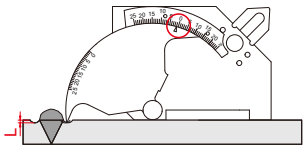

measure undercut depth

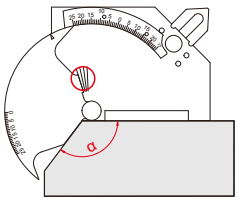

measure angle of preparation

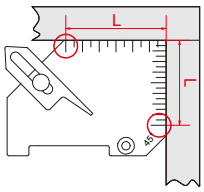

measure length

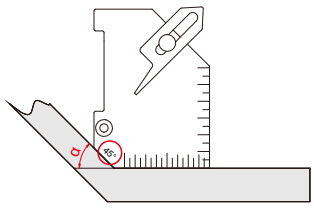

measure 45° angle

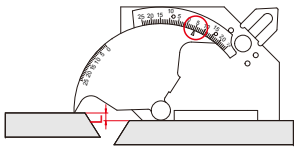

measure misalignment

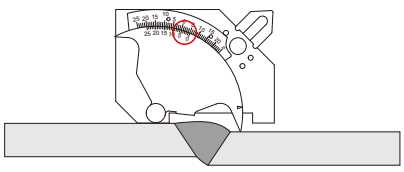

measure misalignment

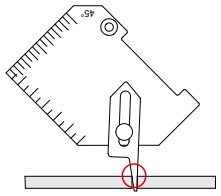

measure gap

Code	Application	Range	Graduation	Accuracy
975-025-21	measure crown height	0 - 25mm	1mm	±0.5mm
	measure fillet weld leg height	0 - 25mm	1mm	±0.5mm
	measure fillet weld throat size	0 - 15mm	1mm	±0.5mm
	measure undercut depth	0 - 25mm	1mm	±0.5mm
	measure angle of preparation	0 - 60°	5°	±1°
	measure length	0 - 60mm	1mm	±0.5mm
	measure 45° angle	—	—	±1°
	measure misalignment	0 - 25mm	1mm	±0.5mm
	measure gap	2-5mm	1mm	±0.5mm

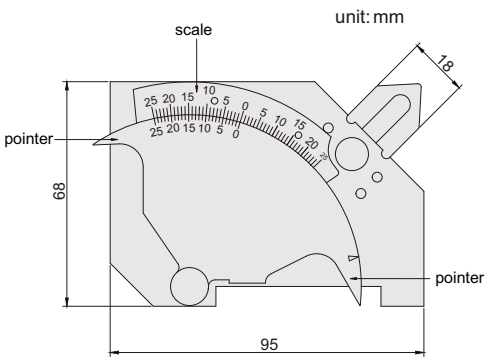

976 PIPE WELDING GAUGE

- Made of stainless steel



front side reverse side

unit: mm

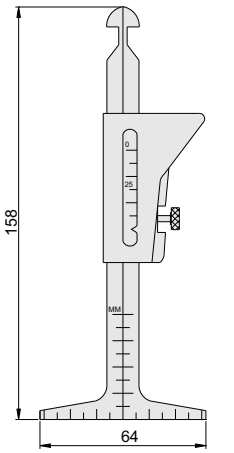

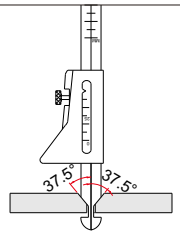

measure bevel on end preparation

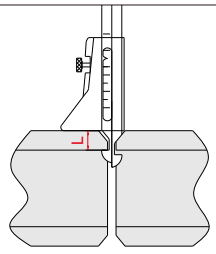

measure pipe wall thickness

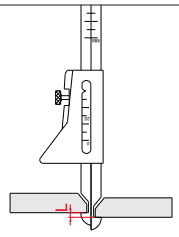

measure internal misalignment

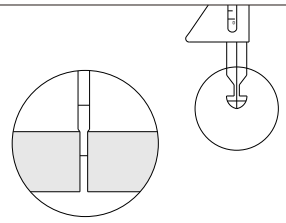

measure fit-up gap

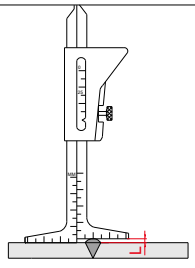

measure crown height

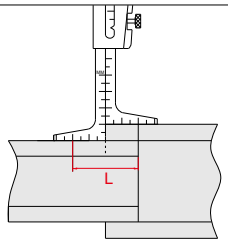

measure distance between two marking lines of socket weld

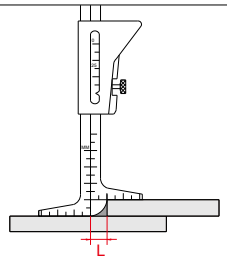

measure fillet weld length

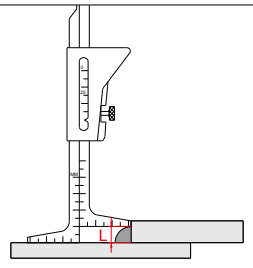

measure fillet weld height

Code	Application	Range	Graduation	Accuracy
976-045-01	measure bevel on end preparation	37.5°	—	±1°
	measure pipe wall thickness	0 - 45mm (0 – 1-3/4")	1mm (1/16")	±0.5mm
	measure internal misalignment	0 - 35mm (0 – 1-3/8")	1mm (1/32")	±0.5mm
	measure fit-up gap	1.6mm, 2.2mm	—	±0.1mm
	measure crown height	0 - 35mm (0 – 1-3/8")	1mm (1/32")	±0.5mm
	measure distance between two marking lines of socket weld	0 - 60mm (0 – 2-3/8")	1mm (1/16")	±0.5mm
	measure fillet weld length	0 - 30mm (0 – 1-1/4")	1mm (1/16")	±0.5mm
	measure fillet weld height	0 - 35mm (0 – 1-3/8")	1mm (1/32")	±0.5mm

960 PIP WELDING GAUGE

- Made of stainless steel



front side



reverse side

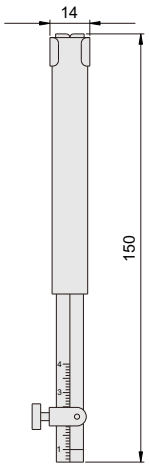

unit: mm

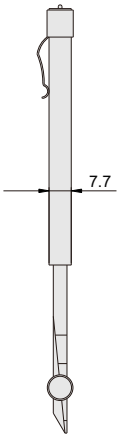

Code	Measurement	Range	Graduation	Accuracy
960-030-01	internal misalignment	0-30mm	1mm	±0.5mm
	fit-up gap	0.7-4mm	0.1mm	±0.1mm

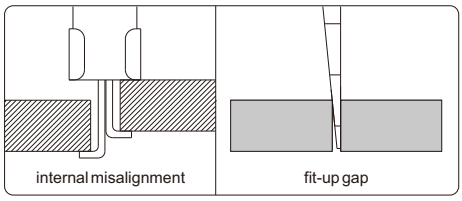

SERIES 977 FILLET WELD GAUGE

- Measure concave and convex weld sizes
- 7 blades are included
- Each blade measures two sizes of concave and convex weld
- Made of stainless steel



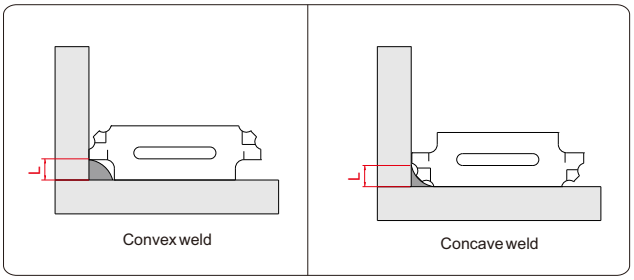

unit: mm

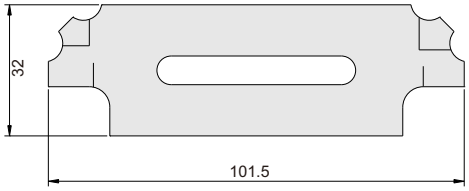

Code	Accuracy	Size
977-025-01	±0.5mm	3, 4, 5, 6, 8, 9, 10, 11, 12, 14, 16, 19, 22, 25
977-025-02	±0.02"	1/8",3/16",1/4",5/16",3/8",7/16",1/2",5/8",3/4",7/8",1"

745 FILLET WELDING GAUGE

- Measure convex weld sizes
- 3 blades are included
- Made of stainless steel

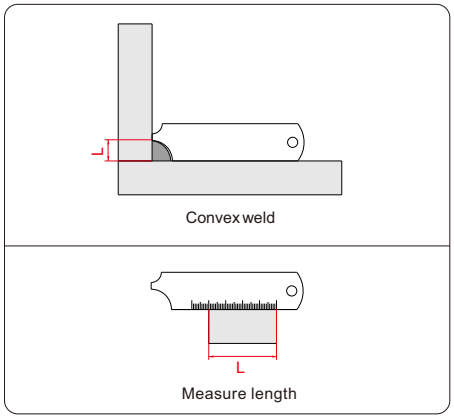



unit: mm

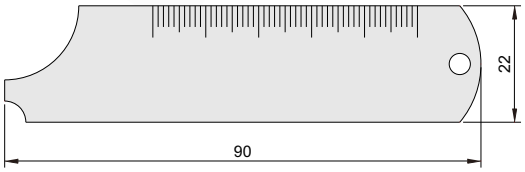

Code	Measurement	Range	Graduation	Accuracy
745-050-03	convex weld size	4, 6, 8, 10, 12, 14mm	—	±0.5mm
	lenght	0-50mm	1mm	±0.5mm

749 WELDING GAUGE

- Made of stainless steel



Application

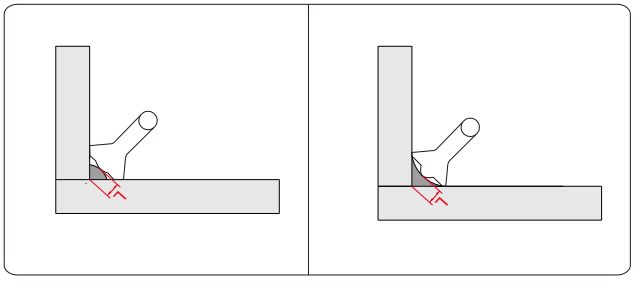

Code	Size
749-012-01	3, 3.5, 4, 4.5, 5, 5.5, 6, 6.5, 7, 8, 10, 12mm

978 WELDING GAUGE

- Pointer can be locked for later reference
- Made of stainless steel



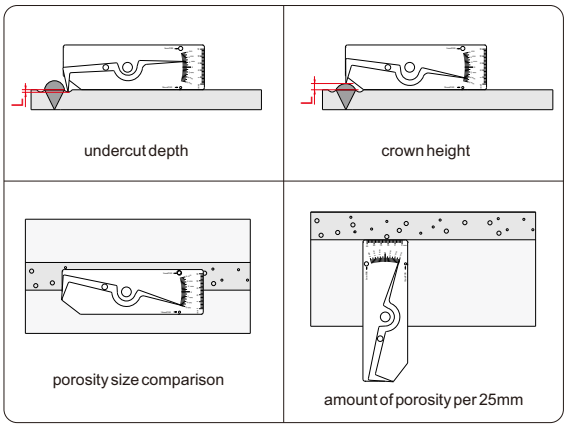

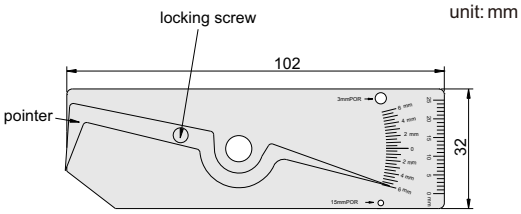

Code	Measurement	Range	Graduation	Accuracy
978-006-01	undercut depth	0 - 6mm	0.5mm	±0.5mm
	crown height	0 - 6mm	0.5mm	±0.5mm
	porosity size comparison	1.5mm, 3mm	—	±0.2mm
	amount of porosity per 25mm	25mm	1mm	—

966 WELDING GAUGE

- Made of stainless steel

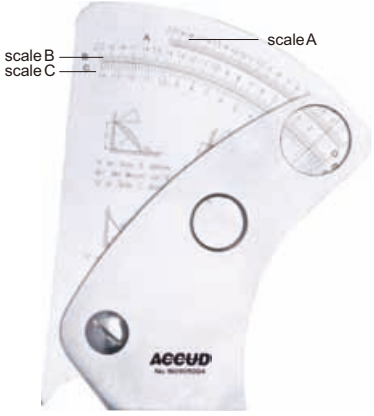

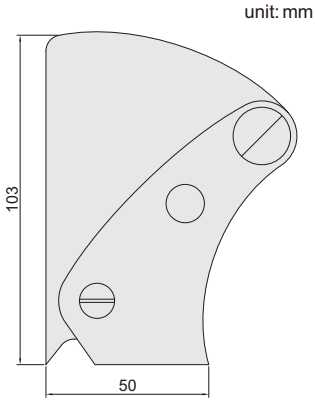

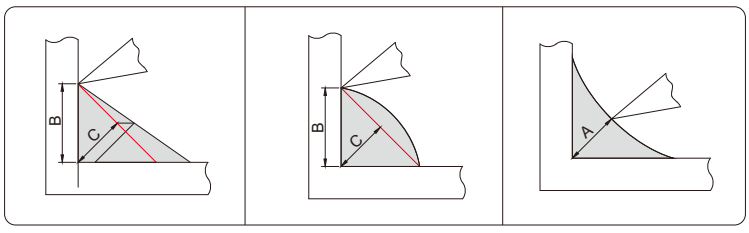

Code	Graduation	Accuracy
966-001-01	0.2mm	±0.3mm

979 WELDING GAUGE

- Made of stainless steel

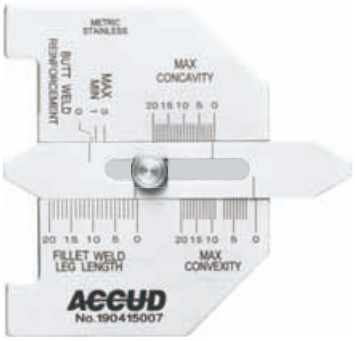

unit: mm

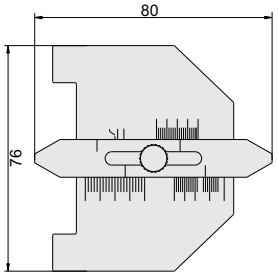

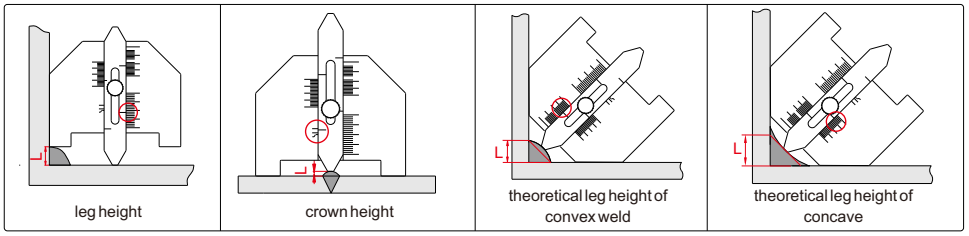

Code	Range	Graduation	Accuracy	Measurement
979-020-01	0-20mm	1mm	±0.5mm	leg height
	0-3mm	—	±0.5mm	crown height
	0-20mm	1mm	±0.5mm	theoretical leg height of convex weld
	0-20mm	1mm	±0.5mm	theoretical leg height of concave

969 FILLET WELDING GAUGE

- Calculating card is included
- Made of stainless steel

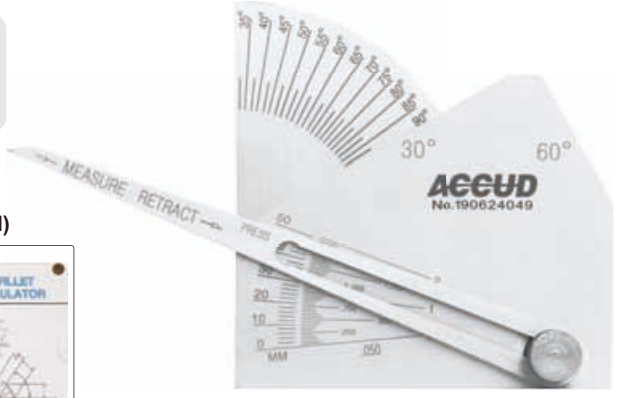

unit: mm

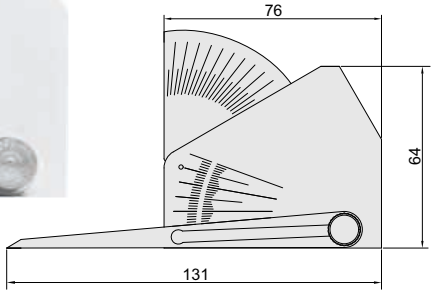

Calculating card (included)

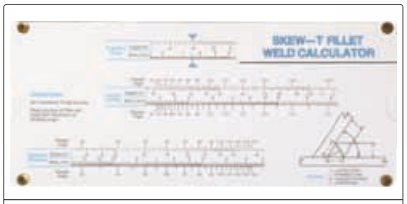

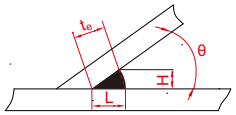

measure weld seam height **H** and angle **θ**, calculate theoretical throat size t_e and leg height **L** according to **H** and **θ**.

Code	Measurement	Range	Graduation	Accuracy
969-050-01	weld seam height **H**	0-50mm/0-2"	2mm/.050"	±1mm
	angle **θ**	30°- 90°	2.5°	±1°
	90° angle	–	–	±0.5°

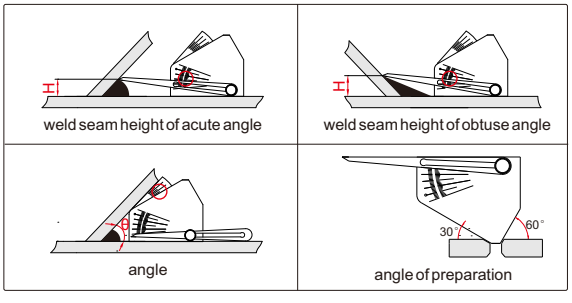

746 WELDING GAUGE

- Made of stainless steel



unit: mm

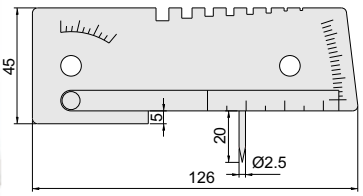

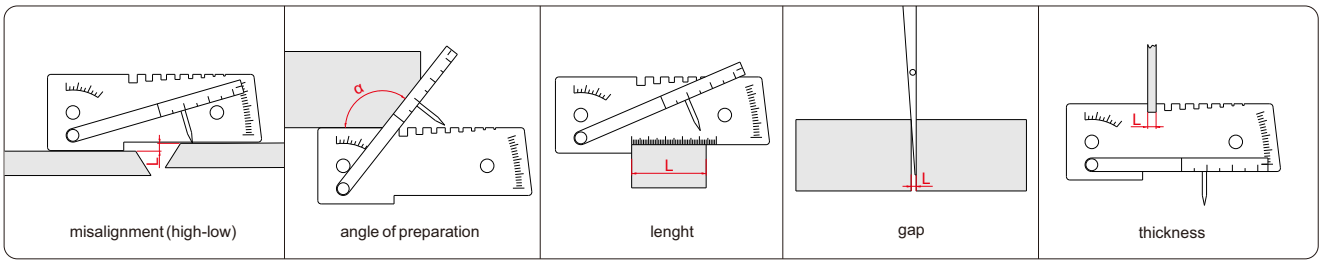

Code	Measurement	Range	Graduation	Accuracy
746-050-01	misalignment (high-low)	-5mm-15mm	1mm	±0.5mm
	angle of preparation	0°-45°	5°	±2.5°
	lenght	0-50mm	1mm	±0.5mm
	gap	1-4mm	0.5mm	±0.25mm
	thickness	1, 1.2 , 2.0 , 2.5 , 3.0, 3.25, 4.0, 5.0mm	—	±0.1mm

747 WELDING GAUGE

- Made of stainless steel



unit: mm

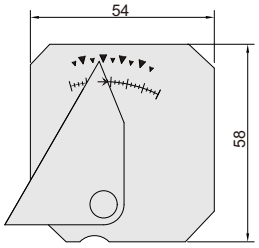

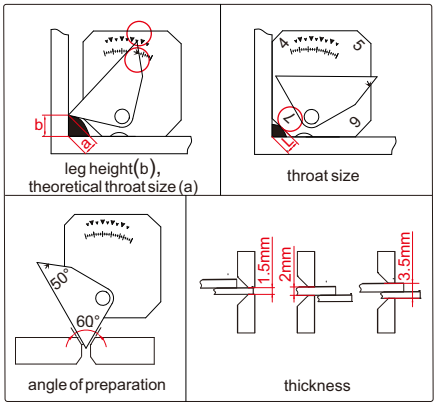

Code	Measurement	Range	Graduation	Accuracy
747-018-01	theoretical throat size (a)	2-12mm	1mm	±0.5mm
	leg height (b)	0-18mm	1mm	±0.5mm
	throat size	4, 5, 6, 7mm	—	±0.5mm
	angle of preparation	50°, 60°	—	±1°
	thickness	1.5, 2, 3.5mm	—	±0.2mm

748 PIPE PIT GAUGE

- Made of stainless steel



front side


reverse side

Application

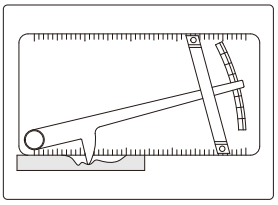

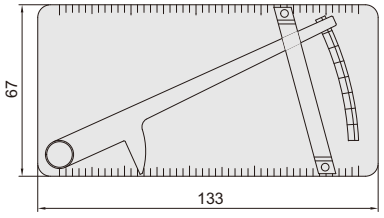

Code	Range	Graduation	Accuracy
748-012-01	0-0.5"(0-1/2")	0.01"(1/16")	±0.02"

968 DRILL ANGLE GAUGE

- Check drills with angle 60°, 70°, 90°, 118°, 125°, 135°, 150° or 160°
- Made of stainless steel

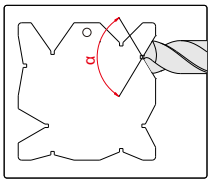



unit: mm

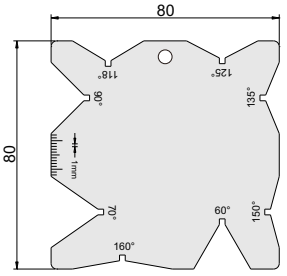

Code	Accuracy
968-001-01	±0.5°

965 DRILL POINT GAUGE

- For twist drills with 118° angle, to check if the center of tip is concentric with the drill body
- Made of stainless steel



unit: mm

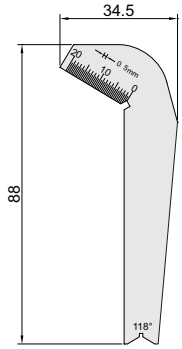

Application

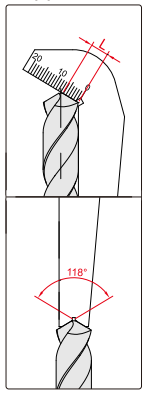

Package



Code	Accuracy	
	Angle	Length
965-005-01	±0.5°	±0.5mm

SERIES 741 U.S. STANDARD SHEET METAL GAUGE

Code	Range
741-036-12	0-36(7.938-0.179mm/.3125-.0070")

NO.	W
0	7.938mm(.3125")
1	7.144mm(.2813")
2	6.747mm(.2656")
3	6.350mm(.2500")
4	5.953mm(.2344")
5	5.556mm(.2188")
6	5.159mm(.2031")
7	4.763mm(.1875")
8	4.366mm(.1719")
9	3.969mm(.1563")
10	3.572mm(.1406")
11	3.175mm(.1250")
12	2.778mm(.1094")
13	2.381mm(.0938")
14	1.984mm(.0781")
15	1.786mm(.0703")
16	1.588mm(.0625")
17	1.429mm(.0563")
18	1.270mm(.0500")

NO.	W
19	1.111mm(.0438")
20	0.953mm(.0375")
21	0.873mm(.0344")
22	0.794mm(.0313")
23	0.714mm(.0281")
24	0.635mm(.0250")
25	0.556mm(.0219")
26	0.476mm(.0188")
27	0.437mm(.0172")
28	0.397mm(.0156")
29	0.357mm(.0141")
30	0.318mm(.0125")
31	0.278mm(.0109")
32	0.258mm(.0102")
33	0.238mm(.0094")
34	0.218mm(.0086")
35	0.198mm(.0078")
36	0.179mm(.0070")

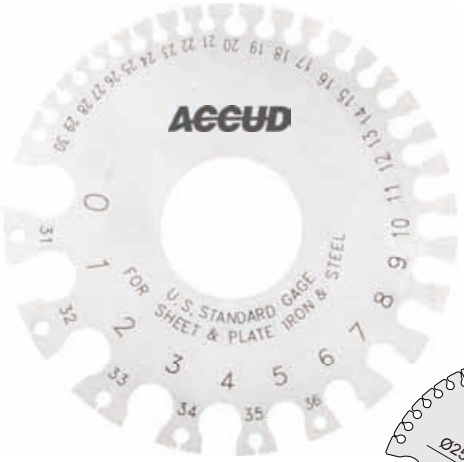

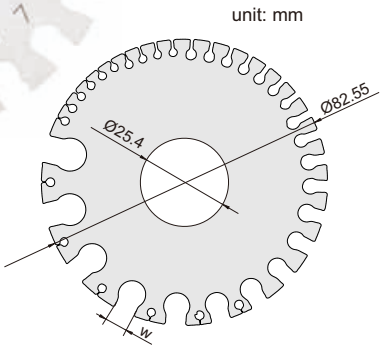

- For gaging sheet metal, plate iron and steel
- Hardened

SERIES 741 AMERICAN STANDARD WIRE GAUGE

Code	Range
741-036-11	0-36(8.250-0.127mm/.3249-.0050")

NO.	W
0	8.250mm(.3249")
1	7.350mm(.2893")
2	6.540mm(.2576")
3	5.830mm(.2294")
4	5.190mm(.2043")
5	4.620mm(.1819")
6	4.110mm(.1620")
7	3.670mm(.1443")
8	3.260mm(.1285")
9	2.910mm(.1144")
10	2.590mm(.1019")
11	2.300mm(.0907)
12	2.050mm(.0808")
13	1.820mm(.0720")
14	1.630mm(.0641")
15	1.450mm(.0571")
16	1.290mm(.0508")
17	1.150mm(.0453")
18	1.020mm(.0403")

NO.	W
19	0.912mm(.0359")
20	0.813mm(.0320")
21	0.724mm(.0285")
22	0.643mm(.0253")
23	0.574mm(.0226")
24	0.511mm(.0201")
25	0.440mm(.0179")
26	0.404mm(.0159")
27	0.361mm(.0142")
28	0.320mm(.0126")
29	0.287mm(.0113")
30	0.254mm(.0100")
31	0.226mm(.0089")
32	0.203mm(.0080")
33	0.180mm(.0071")
34	0.160mm(.0063")
35	0.142mm(.0056")
36	0.127mm(.0050")



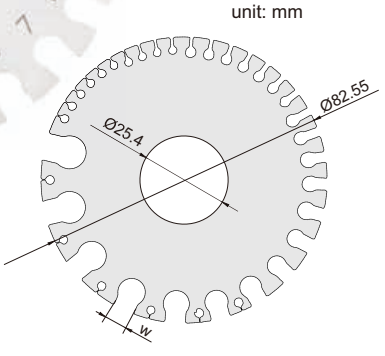

- For gaging non-ferrous wire and metals such as copper, brass and aluminum
- Hardened

940 GAP/DIAMETER GAUGE

- Made of stainless steel

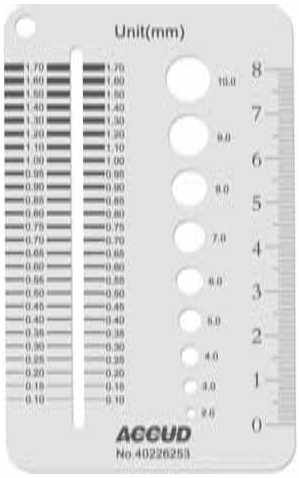

Package



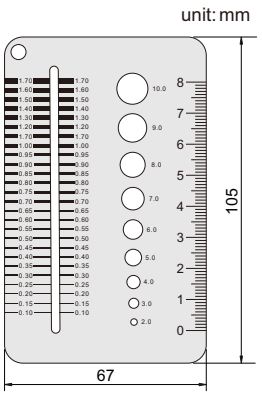

Code	Standard diameter	Gap
940-010-01	2, 3, 4, 5, 6, 7, 8, 9, 10mm	0.1-1.7mm

742 THICKNESS GAUGE

- Made of stainless steel

Package



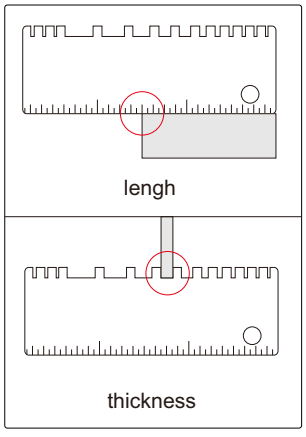

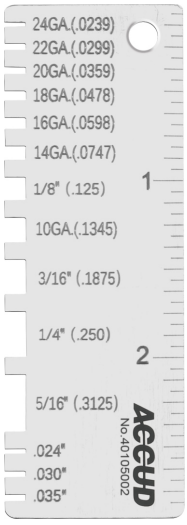

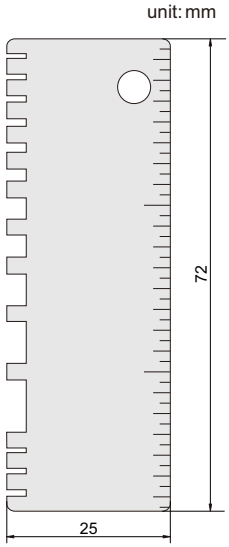

Code	Application	Range	Graduation	Accuracy
742-003-11	lengh	0-2 3/4"	1/16"	1/32"
	thickness	24GA.(0.0239"), 22GA.(0.0299"), 20GA.(0.0359")	–	±0.002"
		18GA.(0.0478"), 16GA.(0.0598"), 14GA.(0.0747"), 1/8"(0.125"), 10GA.(0.1345"), 3/16"(0.1875"), 1/4"(0.250"), 5/16"(0.3125")	–	±0.004"
		0.024", 0.030", 0.035"	–	±0.002"

SERIES 981 INSIDE CALIPER

- Made of carbon steel

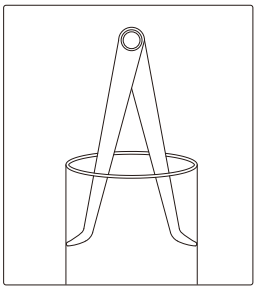

Code	Size(L)	Range(W)	h
981-006-01	150mm	17-150mm	2
981-008-01	200mm	17-200mm	2
981-010-01	250mm	17-250mm	3
981-012-01	300mm	20-300mm	3
981-016-01	400mm	30-400mm	3
981-020-01	500mm	30-500mm	3
981-024-01	600mm	30-600mm	3
981-032-01	800mm	30-800mm	4
981-040-01	1000mm	30-1000mm	4



981-006-01

unit: mm

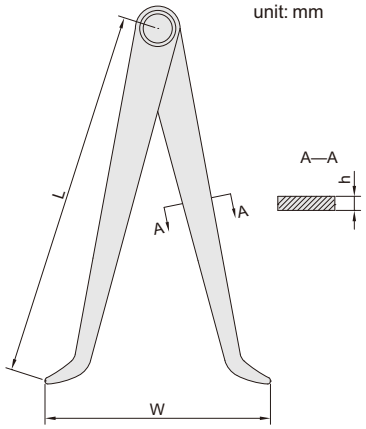

Package (size≤300mm)



SERIES 982 INSIDE SPRING CALIPER

- Made of carbon steel

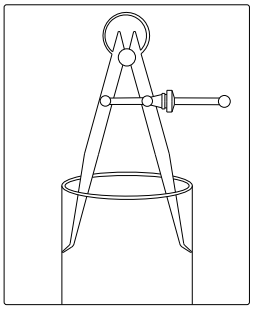

Code	Size(L)	Range(W)	Type
982-005-01	125mm	15 - 115mm	A
982-006-01	150mm	15 - 140mm	A
982-008-01	200mm	18 - 190mm	A
982-010-01	250mm	20 - 240mm	A
982-012-01	300mm	20 - 290mm	A
982-016-01	400mm	20 - 390mm	B
982-020-01	500mm	25 - 490mm	B
982-024-01	600mm	25 - 590mm	B



982-006-01

unit: mm

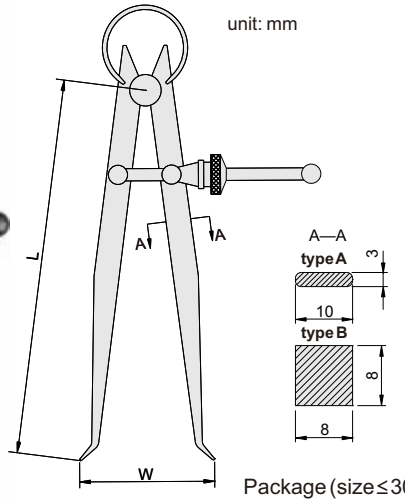

Package (size≤300mm)



SERIES 983 OUTSIDE CALIPER

- Made of carbon steel

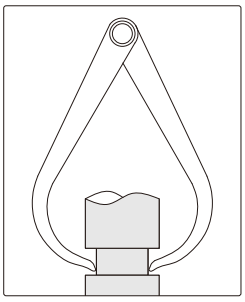

Code	Size(L)	Range(W)	h
983-006-01	150mm	0 - 150mm	2
983-008-01	200mm	0 - 200mm	2
983-010-01	250mm	0 - 250mm	3
983-012-01	300mm	0 - 300mm	3
983-016-01	400mm	0-400mm	3
983-020-01	500mm	0-500mm	3
983-024-01	600mm	0-600mm	3
983-032-01	800mm	0-800mm	4
983-040-01	1000mm	0-1000mm	4



983-006-01

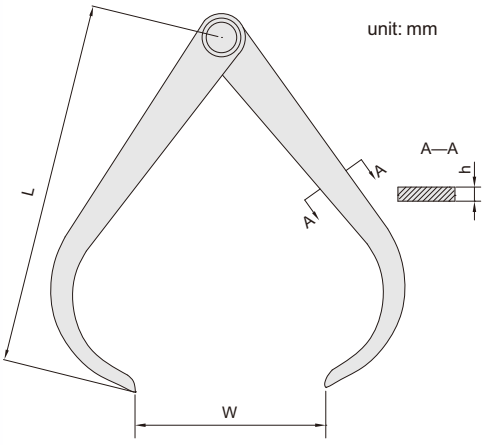

Package (size≤300mm)



SERIES 984 OUTSIDE SPRING CALIPER

- Made of carbon steel

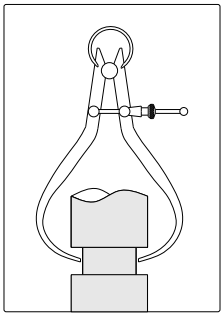

Code	Size(L)	Range(W)	Type
984-005-01	125mm	0 - 115mm	A
984-006-01	150mm	0 - 140mm	A
984-008-01	200mm	0 - 190mm	A
984-010-01	250mm	0 - 240mm	A
984-012-01	300mm	0 - 290mm	A
984-016-01	400mm	0 - 390mm	B
984-020-01	500mm	0 - 490mm	B
984-024-01	600mm	0 - 590mm	B



984-005-01

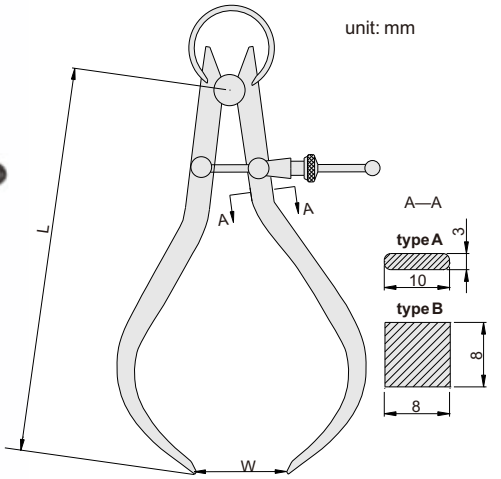

Package (size≤300mm)



SERIES 985 SPRING DIVIDER

- Made of carbon steel
- Hardened points



985-005-01

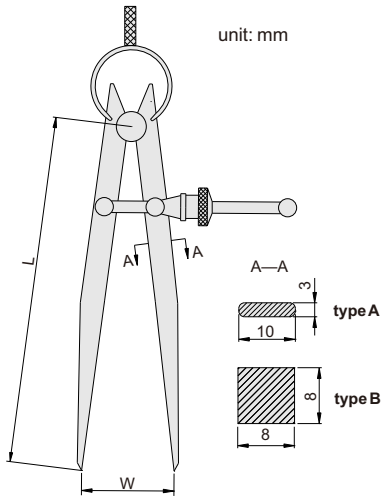

Code	Size(L)	Range(W)	Type
985-004-01	100mm	0-90mm	A
985-005-01	125mm	0-115mm	A
985-006-01	150mm	0-140mm	A
985-008-01	200mm	0-190mm	A
985-010-01	250mm	0-240mm	A
985-012-01	300mm	0-290mm	B
985-016-01	400mm	0-390mm	B
985-020-01	500mm	0-490mm	B
985-024-01	600mm	0-590mm	B

Package (size≤300mm)

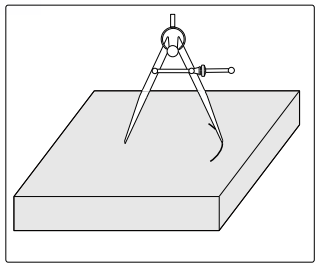



SERIES 986 DIVIDER

- Made of carbon steel
- Hardened points



986-005-01

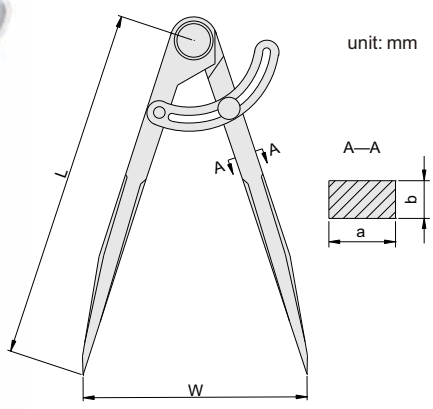

Code	Size(L)	Range(W)	a	b
986-004-01	100mm	0-90mm	8.5	7
986-005-01	125mm	0-115mm	8.5	7
986-006-01	150mm	0-140mm	8.5	7
986-008-01	200mm	0-190mm	10	7
986-010-01	250mm	0-240mm	11	7
986-012-01	300mm	0-290mm	12	7
986-016-01	400mm	0-390mm	12	7
986-020-01	500mm	0-490mm	12	7
986-024-01	600mm	0-590mm	12	7
986-032-01	800mm	0-790mm	16	11
986-040-01	1000mm	0-990mm	16	11

Package (size≤300mm)

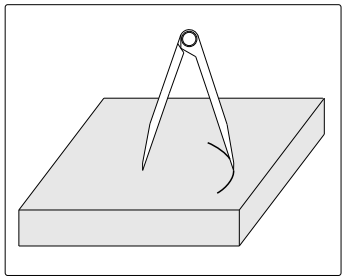



SERIES 987 SPRING DIVIDER

- Made of carbon steel
- Hardened scriber



unit: mm

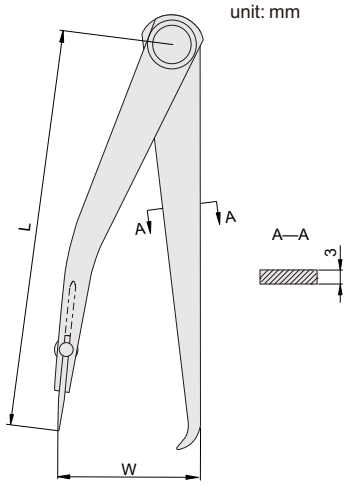

Code	Size(L)	Range(W)
987-005-01	125mm	0 - 125mm
987-006-01	150mm	0 - 150mm
987-008-01	200mm	0 - 200mm
987-010-01	250mm	0 - 250mm
987-012-01	300mm	0 - 300mm

987-005-01

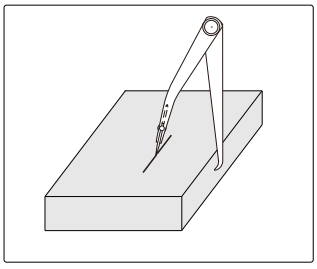

SERIES 990 STEEL RULE

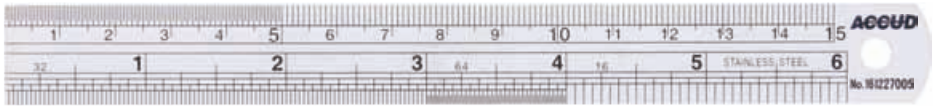

990-006-11

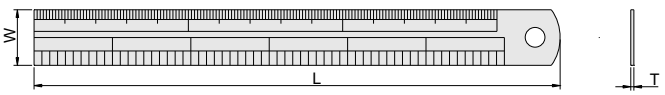

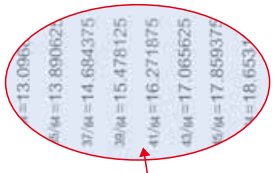

- Graduation: 0.5mm, 1mm, 1/64", 1/32", 1/16"
- Made of stainless steel

Range >1000mm



Code	Range	Accuracy	T	L	W	Remark
990-006-11	150mm/6"	±0.18mm	1	170	18	graduation on front and back
990-008-11	200mm/8"	±0.18mm	1	220	18	graduation on front and back
990-012-11	300mm/12"	±0.27mm	1	330	25	graduation on front and back
990-020-11	500mm/20"	±0.27mm	1	530	30	graduation on front and back
990-040-11	1000mm/40"	±0.45mm	1.5	1040	32	graduation on front and back
990-060-11	1500mm/60"	±0.63mm	1.5	1550	38	graduation on front
990-080-11	2000mm/80"	±0.80mm	2	2065	38	graduation on front

SERIES 990 STEEL RULE

front side



reverse side

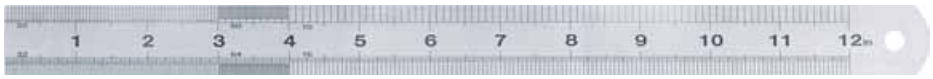

990-012-11H



- Graduation: 0.5mm, 1mm, 1/64", 1/50", 1/32", 1/20", 1/16", 1/10"
- Matt finished
- Made of stainless steel

Code	Range	Accuracy	T	L	W
990-006-11H	150mm/6"	±0.08mm	1	170	14
990-012-11H	300mm/12"	±0.11mm	1	334	25
990-020-11H	500mm/20"	±0.14mm	1.2	534	28.5
990-024-11H	600mm/24"	±0.16mm	1.2	638	28.5
990-040-11H	1000mm/40"	±0.24mm	1.2	1043	35

909 POCKET RULE WITH SLIDING CLIP

- With sliding clip, clip can be inserted in the pocket, also can be used as depth gage base
- Inch/metric conversion table on the back
- Made of stainless steel

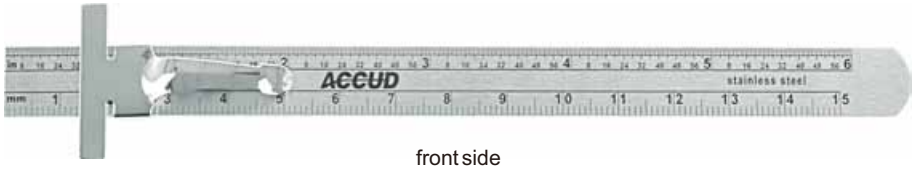

front side

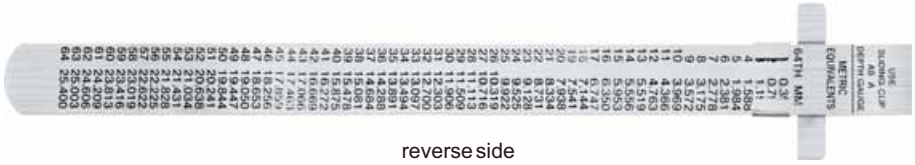

reverse side

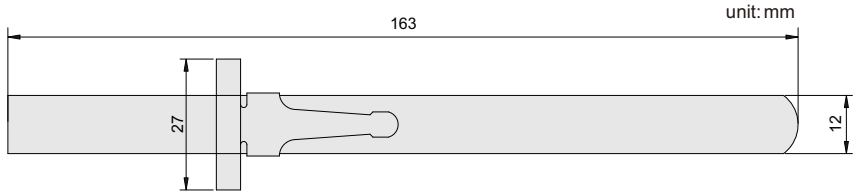

Code	Range	Graduation	Accuracy
909-006-11	150mm/6"	1mm, 1/64"	±0.15mm

SERIES 989 MEASURING TAPE



989-005-01

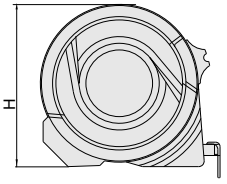

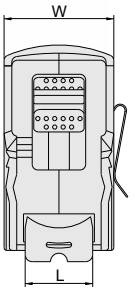

unit: mm

- Accuracy: ±(0.3+0.2L)mm (L is the measured length rounded up to the next whole meter), meet MI-008 of DIRECTIVE 2014/32/EU
- Matt Nylon coating tape, wear resistance

Code	Range	Graduation	Width of tape L	W	H
989-003-01	0-3m	1mm	16mm	33	60
989-005-01	0-5m	1mm	19mm	33	68

988 MEASURING WHEEL

- ABS plastic frame, wear-resistant PU tire
- Three-section adjustable handle





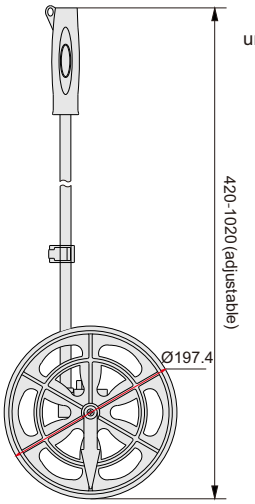

unit: mm

Code	Range	Resolution
988-100-11	0.1-9999.9m	0.1m

959 DIGITAL MEASURING WHEEL

IP40 CR2032



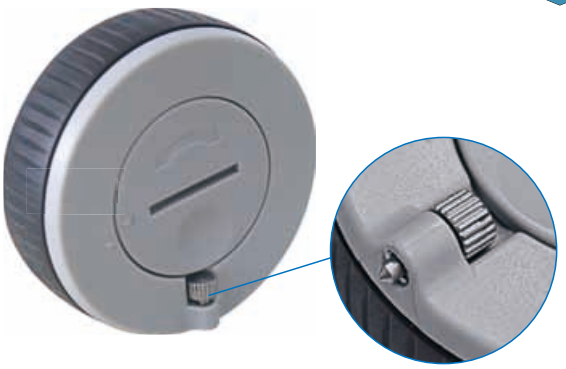

scriber

- Measuring length of curve
- Four measurement modes: length,rectangle area, diameter of circle, cube
- Button function: on/off, mm/inch, one or two sides set, measurement mode conversion, measurement
- Automatic power off

unit: mm

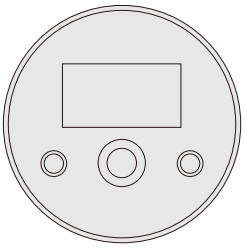

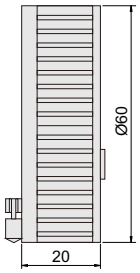

Code	Range	Resolution	Accuracy
959-100-11	0-10m/0-32.8ft	0.001m/0.01ft	±0.3%L (L is the measured length)

SERIES 155 DIGITAL SCRIBING CALIPER

Data output CR2032

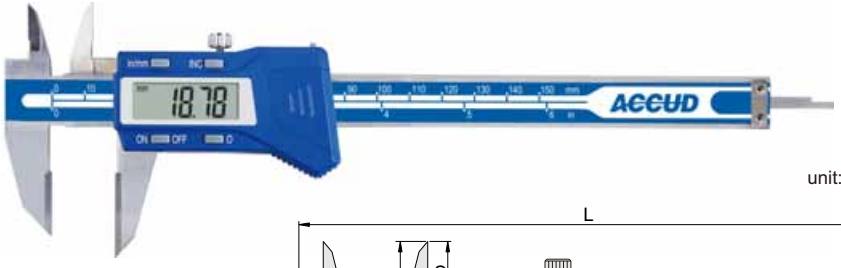

155-006-11

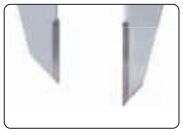

Carbide tipped jaws

unit: mm

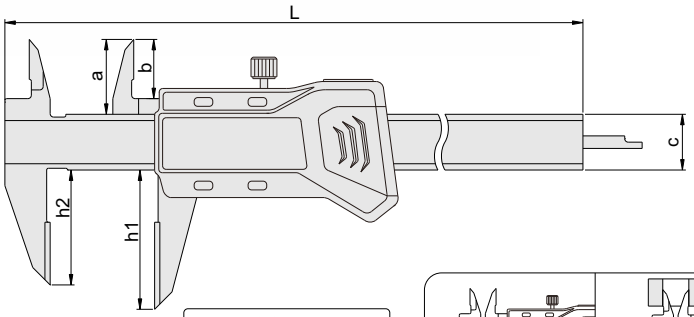

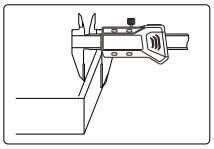

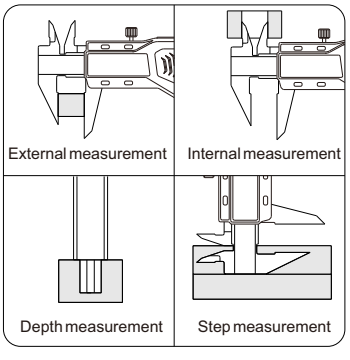

- Carbide -tipped jaws facilitate fine scribing on workpiece
- Resolution:0.01mm/0.0005"
- Automatic power on/off
- Buttons: on/off, zero, mm/in, INC
- Data output(cable code:100-03 or 100-04)
- Made of stainless steel

Code	Range	Accuracy	a	b	c	h1	h2	L
155-006-11	0-150mm/0-6"	±0.03mm	21	16.5	16	40	33	236
155-008-11	0-200mm/0-8"	±0.03mm	24	19.5	16	50	43	286
155-012-11	0-300mm/0-12"	±0.04mm	25	20.5	17	60	53	386

900 SCRIBING CALIPER



- Made of stainless steel
- Satin chrome plated reading surface
- Carbide scriber tip
- With accessory: carbide scriber tip

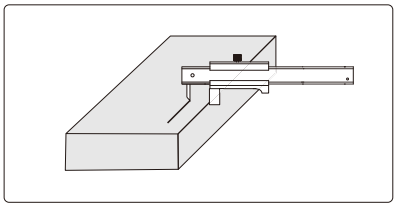

unit: mm

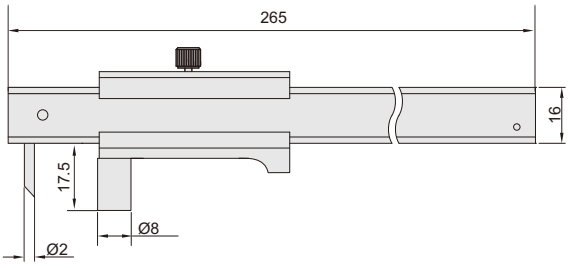

Code	Range	Graduation	Accuracy
900-008-11	0-200mm/0-8"	0.1mm,1/128"	±0.1mm

SERIES 901 SCRIBING CALIPER



unit: mm

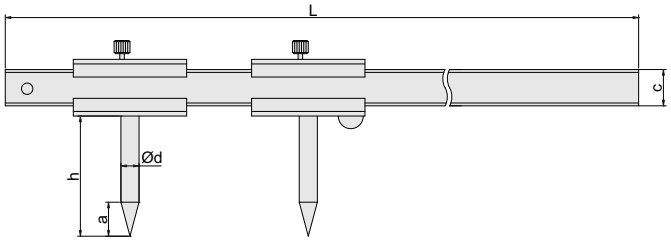

- Graduation: 0.1mm
- Made of stainless steel
- Satin chrome plated reading surface
- Hardened scriber tips

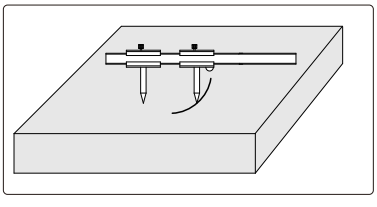

Code	Range	Accuracy	a	c	h	Ød	L
901-012-01	51-300mm	±0.1mm	13	16	53	8	410
901-080-01	51-2000mm	±0.1mm	20	42	80	12	2500

902 T-SHAPE MARKING GAUGE

- Made of stainless steel
- Satin chrome plated reading surface



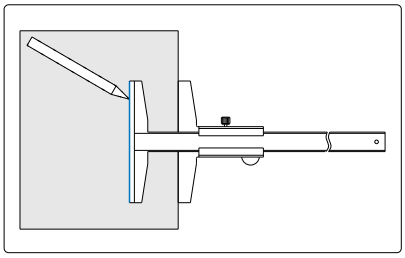

unit: mm

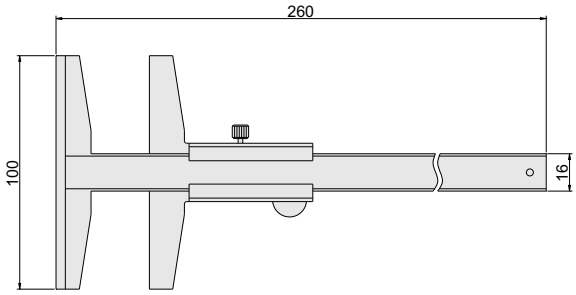

Code	Range	Graduation	Accuracy
902-006-51	0-150mm	0.05mm	±0.05mm

903 HEIGHT SCRIBER

- Grooved bottom for cylinder
- Two pins to be set against the edge of surface plate

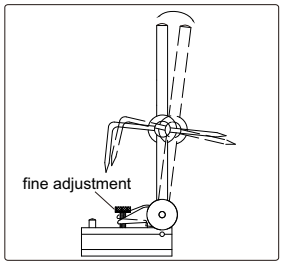

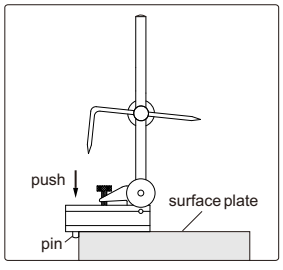



unit: mm

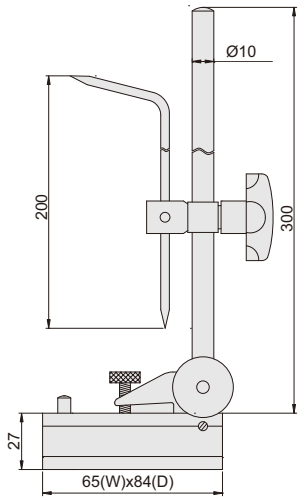

Code
903-012-11

SERIES 992 MARKING GAUGE

- Made of stainless steel
- Stain chrome finish



992-008-01

unit: mm

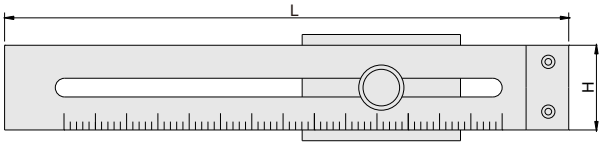

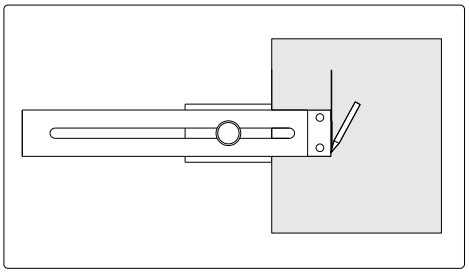

Code	Range	Accuracy	Graduation	H	L
992-008-01	0-200mm	±0.1mm	0.1mm	40	250
992-010-01	0-250mm	±0.1mm	0.1mm	40	300
992-012-01	0-300mm	±0.1mm	0.1mm	40	350

SERIES 993 CENTER MARKING GAUGE

- Find the center of round plates and shafts
- Made of stainless steel
- Stain chrome plated



993-004-01

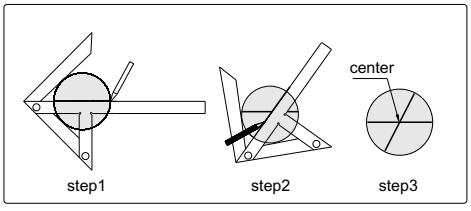

unit: mm

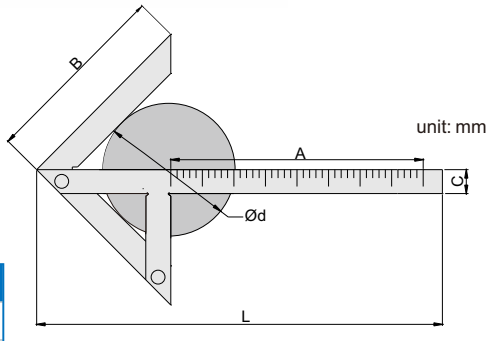

Code	Size (AxB)	Diameter(Ød)	Accuracy	C	L
993-004-01	100x70mm	4-90mm	±0.15mm	12	153
993-006-01	150x130mm	4-190mm	±0.15mm	15	245
993-008-01	200x150mm	6-220mm	±0.15mm	15	310
993-012-01	300x180mm	6-270mm	±0.15mm	20	435

995 SCRIBER

- Nickel plated



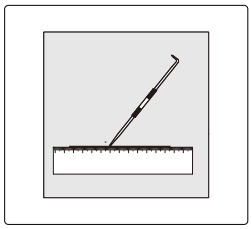

unit: mm

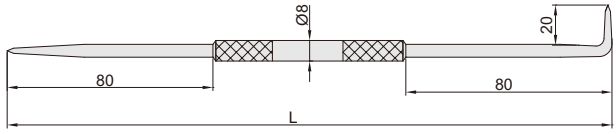

Package



Code	Tips	L
995-009-01	hardened tips	235

995 SCRIBER

- Nickel plated



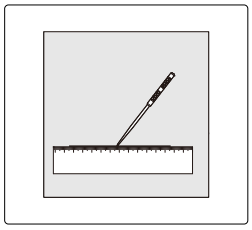

unit: mm

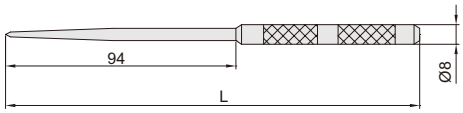

Package



Code	Tips	L
995-007-01	hardened tips	167

995 SCRIBER

- Nickel plated



clip

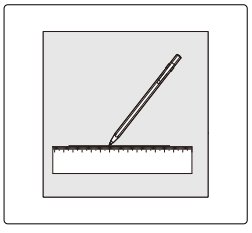

unit: mm

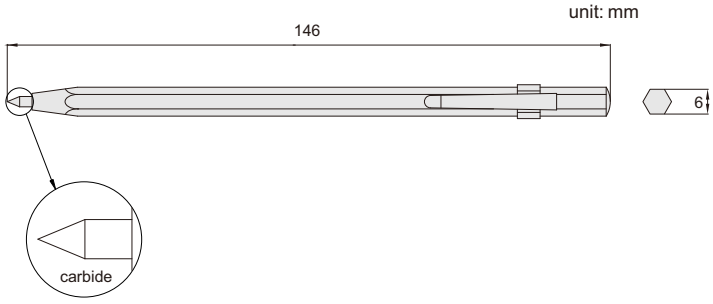

Package



Code	Tips
995-006-11	carbide

SERIES 996 DIGITAL HORIZONTAL SCALE

Data output | CR2032

Type A

- Resolution: 0.01mm/0.0005"
- Buttons: on/off, zero, mm/inch
- Automatic power off
- Data output(cable code:100-03 or 100-04)
- Made of stainless steel
- Supplied with bracket
- Optional accessory: SPC cable

Type B

- Resolution: 0.01mm/0.0005"
- Absolute and incremental measurement
- Data output
- Made of stainless steel
- Supplied with bracket



996-006-11

unit: mm

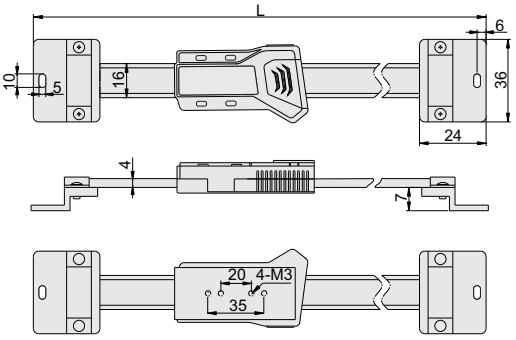

Type A



996-020-11

Bracket**(included)**

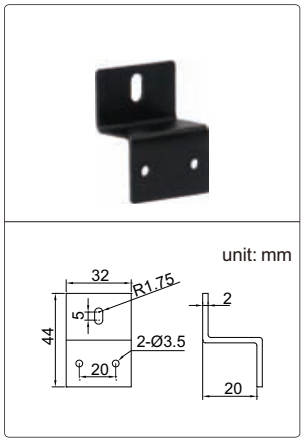

unit: mm

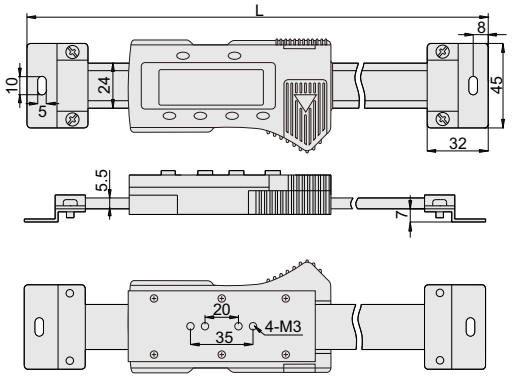

Type B

Code	Range	Accuracy	Type	L
996-004-11	100mm	±0.03mm	A	209
996-006-11	150mm	±0.03mm	A	259
996-008-11	200mm	±0.03mm	A	310
996-012-11	300mm	±0.04mm	A	444
996-020-11	500mm	±0.05mm	B	682
996-024-11	600mm	±0.08mm	B	790
996-032-11	800mm	±0.10mm	B	990
996-040-11	1000mm	±0.10mm	B	1240

SERIES 997 DIGITAL VERTICAL SCALE

Data output

LR44



997-012-11

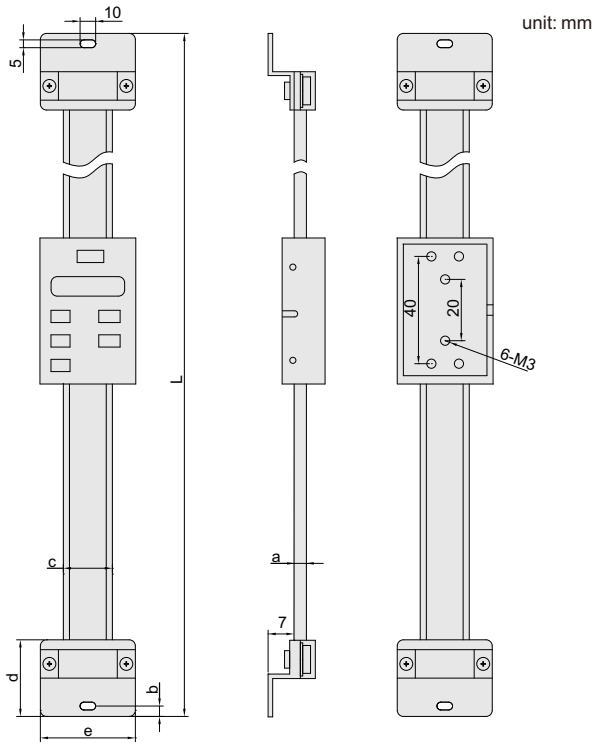

- Resolution: 0.01mm/0.0005"
- Data output
- Button: on/off, zero, mm/inch, ABS, SET, HOLD, TOL
- Made of stainless steel
- Supplied with bracket

Bracket**(included)**

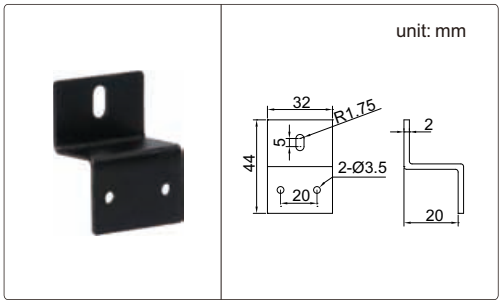

Code	Range	Accuracy	a	b	c	d	e	L
997-004-11	100mm	±0.03mm	4	6	20	24	40	245
997-006-11	150mm	±0.03mm	4	6	20	24	40	296
997-008-11	200mm	±0.03mm	4	6	20	24	40	345
997-012-11	300mm	±0.04mm	4	6	20	24	40	444
997-020-11	500mm	±0.05mm	5.5	8	24	32	45	682
997-024-11	600mm	±0.08mm	5.5	8	24	32	45	790
997-032-11	800mm	±0.10mm	10.5	9.5	31	32	60	990
997-040-11	1000mm	±0.10mm	10.5	9.5	31	40	60	1240

SERIES 611 GRANITE SURFACE PLATE

Certificate

- Made of fine-grained granite
- Customized size can be ordered



611-042-00

Physical characteristics of granite

Shore hardness	94HS
Flexural strength	28MPa
Compressive strength	236MPa
Elastic modulus	$9.88x10^4$MPa
Poisson's ratio	0.33
Volume density	$3000kg/m^3$
Water absorption rate	0.05%
Linear expansion coefficient	$6x10^{-6}/°C$

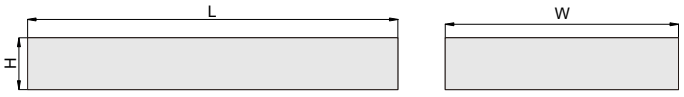

Grade 00

Code	Size(LxWxH)	Flatness	Weight(Kg)
611-032-00	300x200x60mm	2.7μm	11
611-042-00	400x250x60mm	2.9μm	18
611-044-00	400x400x60mm	3.1μm	29
611-053-00	500x315x70mm	3.2μm	33
611-064-00	630x400x80mm	3.5μm	60
611-066-00	630x630x100mm	3.8μm	119
611-085-00	800x500x100mm	3.9μm	120
611-106-00	1000x630x140mm	4.4μm	265
611-107-00	1000x750x150mm	4.5μm	337
611-101-00	1000x1000x150mm	4.8μm	450
611-121-00	1200x800x160mm	4.9μm	461
611-161-00	1600x1000x180mm	5.8μm	864
611-201-00	2000x1000x220mm	6.5μm	1320
611-215-00	2000x1500x250mm	7.0μm	2250

Grade 0

Code	Size(LxWxH)	Flatness	Weight(Kg)
611-032-10	300x200x60mm	5.4μm	11
611-042-10	400x250x60mm	5.9μm	18
611-044-10	400x400x60mm	6.3μm	29
611-053-10	500x315x70mm	6.4μm	33
611-064-10	630x400x80mm	7.0μm	60
611-066-10	630x630x100mm	7.6μm	119
611-085-10	800x500x100mm	7.8μm	120
611-106-10	1000x630x140mm	8.7μm	265
611-107-10	1000x750x150mm	9.0μm	337
611-101-10	1000x1000x150mm	9.7μm	450
611-121-10	1200x800x160mm	9.8μm	461
611-161-10	1600x1000x180mm	11.5μm	864
611-201-10	2000x1000x220mm	12.9μm	1320
611-215-10	2000x1500x250mm	14.0μm	2250

With manufacturer inspection certificate

SERIES 621 STAND FOR GRANITE SURFACE PLATE

- For medium size granite surface plates
- Adjusting range of jacks: 10mm
- One foot on the bottom is adjustable
- The height can be made under customer requirement



621-064-01

unit: mm

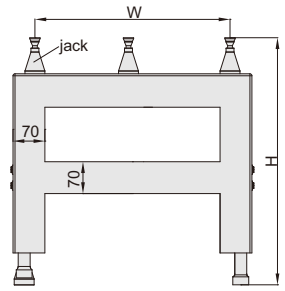

Code	L	W	H	For granite surface plate
621-064-01	352	224	700-710	630x400x80mm
621-066-01	352	352	700-710	630x630x100mm
621-085-01	448	280	700-710	800x500x100mm
621-106-01	560	352	685-695	1000x630x140mm
621-107-01	560	416	685-695	1000x750x150mm
621-101-01	560	560	685-695	1000x1000x150mm
621-121-01	672	448	685-695	1200x800x160mm
621-161-01	896	560	585-595	1600x1000x180mm

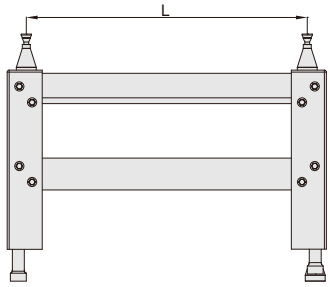

625 JACK SET FOR GRANITE SURFACE PLATE



- 5 jacks per set
- Adjustable height
- For large granite surface plates:
  2000x1000mm
  2000x1500mm
  2500x1500mm
  3000x2000mm

unit: mm

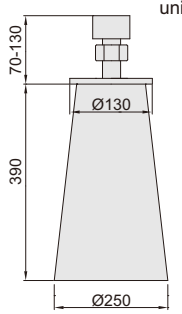

Code
625-000-00

SERIES 627 MAGNETIC V BLOCK

- Hardened, high accuracy, strong magnetic force, for grinding, light milling, drilling and inspection of round and square workpieces
- All working surfaces are hardened to HRC60±2
- Magnetic force on top, bottom and two V grooves
- V groove on the top for large shafts
- V groove on the bottom for small shafts
- Suitable for cast iron surface plates and granite surface plates

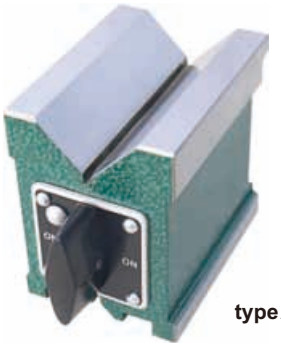

type A

627-075-01

unit: mm

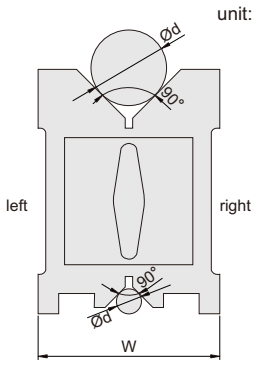

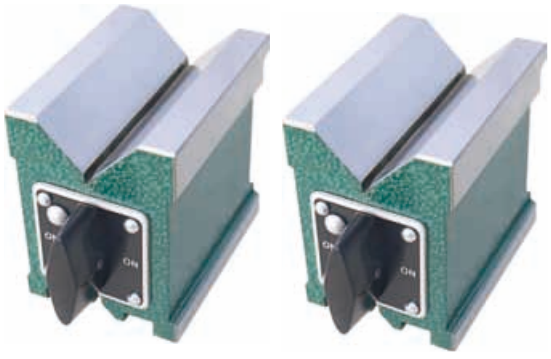

627-075-21

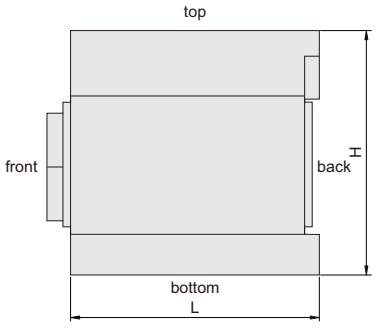

Application

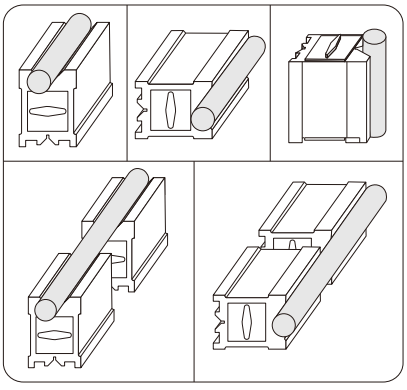



type B

627-160-01

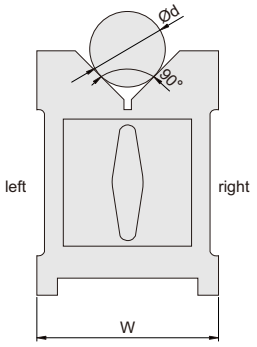

Individual

Code	Size (LxWxH)	Range of shafts(Ød)	Magnetic force	Type	Parallelism of V grooves to top, bottom, left, right sides	Squareness of V grooves to back side
627-075-01	75x56x75mm	5-40mm	85kgf	A	5μm	5μm
627-100-01	100x70x95mm	5-65mm	150kgf	A	5μm	5μm
627-150-01	150x75x100mm	5-70mm	190kgf	A	6μm	6μm
627-160-01	160x125x130mm	5-140mm	220kgf	B	12μm	12μm
627-200-01	200x125x150mm	10-140mm	400kgf	B	12μm	12μm

Matched pair

Code	Size (LxWxH)	Range of shafts(Ød)	Magnetic force	Type	Parallelism of V grooves to top, bottom, left, right sides	Squareness of V grooves to back side	Height difference of a matched pair
627-075-21	75x56x75mm	5-40mm	85kgf	A	5μm	5μm	5μm
627-100-21	100x70x95mm	5-65mm	150kgf	A	5μm	5μm	5μm
627-150-21	150x75x100mm	5-70mm	190kgf	A	6μm	6μm	6μm
627-160-21	160x125x130mm	5-140mm	220kgf	B	12μm	12μm	12μm
627-200-21	200x125x150mm	10-140mm	400kgf	B	12μm	12μm	12μm

SERIES 633 MAGNETIC V-BLOCK

ATTENTION: NOT HARDENED

- Hold cylindrical workpiece for inspection and machining



633-044-01



633-044-01P

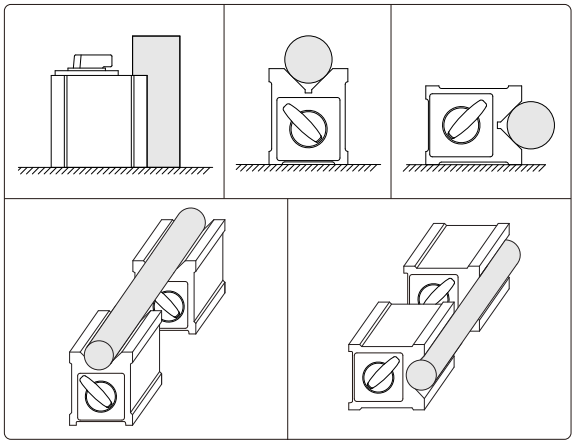

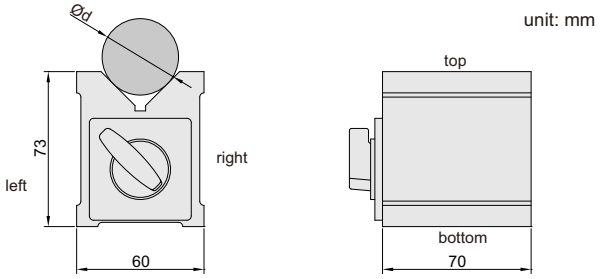

Individual

Code	For shaft range(Ød)	Magnetic force	Top and bottom, left and right parallelism	V-grooves and back side squareness
633-044-01	6 - 44mm	56kgf	10μm	10μm

Matched pair

Code	For shaft range(Ød)	Magnetic force	Top and bottom, left and right parallelism	V-grooves and back side squareness	Height difference of a matched pair
633-044-01P	6 - 44mm	56kgf	10μm	10μm	10μm

SERIES 634 MAGNETIC V-BLOCK

ATTENTION: NOT HARDENED

- Hold cylindrical workpiece for inspection and machining
- Top groove for large shafts
- Bottom grooves for small shafts
- Not suitable for steel or iron surfaces, otherwise the magnetic force will be reduced



634-067-01

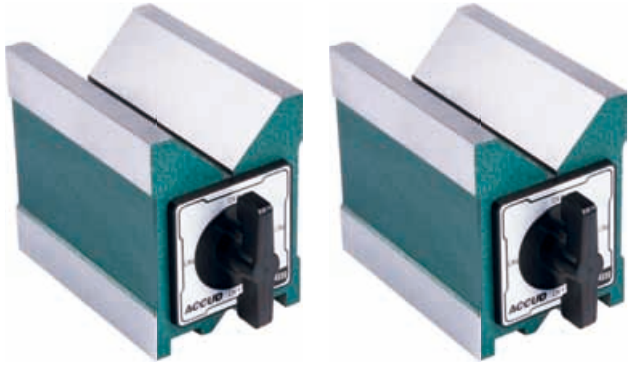

634-067-01P

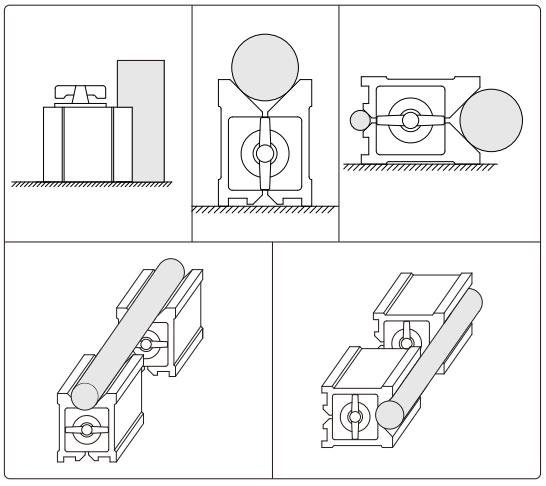

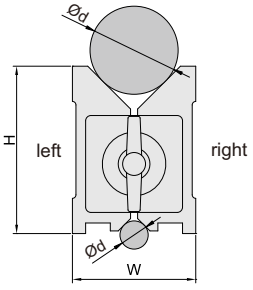

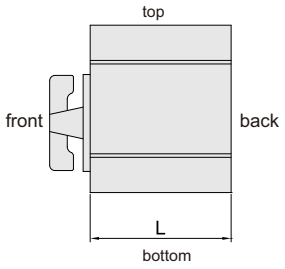

Individual

Code	Size(LxWxH)	For shaft range(Ød)	Magnetic force	V-grooves and back side squareness	Top and bottom, left and right parallelism
634-067-01	80x70x95mm	6-67mm	64kgf	10μm	10μm
634-067-02	100x70x95mm	6-67mm	80kgf	10μm	10μm
634-067-03	120x70x95mm	6-67mm	96kgf	10μm	10μm

Matched pair

Code	Size(LxWxH)	For shaft range(Ød)	Magnetic force	V-grooves and back side squareness	Top and bottom, left and right parallelism	Height difference of a matched pair
634-067-01P	80x70x95mm	6-67mm	64kgf	10μm	10μm	10μm
634-067-02P	100x70x95mm	6-67mm	80kgf	10μm	10μm	10μm
634-067-03P	120x70x95mm	6-67mm	96kgf	10μm	10μm	10μm

SERIES 634 MAGNETIC V-BLOCK (PROFESSIONAL TYPE)

ATTENTION: NOT HARDENED

- Hold cylindrical workpiece for inspection and machining
- Hardened, high accuracy, for grinding, milling, drilling and inspection of round and square workpieces
- All working surfaces are hardened to HRC55-60°
- Top groove for large shafts
- Bottom grooves for small shafts
- Not suitable for steel or iron surfaces, otherwise the magnetic force will be reduced



634-067-01H



634-067-01HP

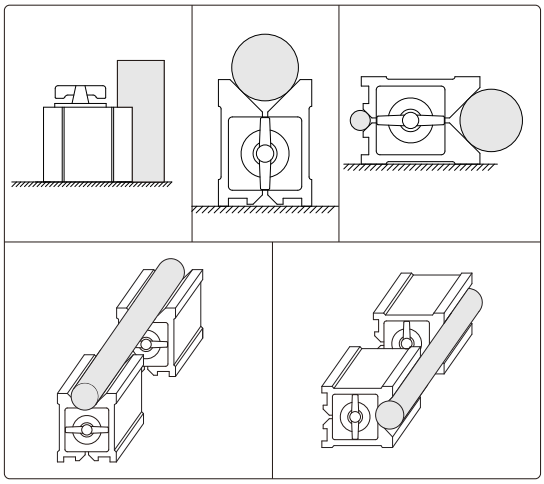

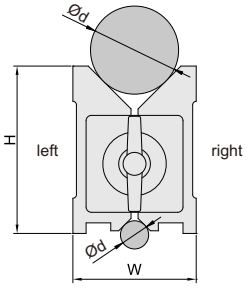

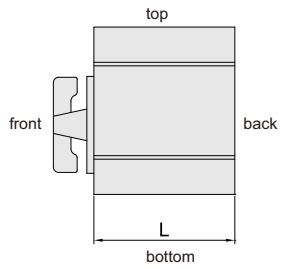

Individual

Code	Size(LxWxH)	For shaft range(Ød)	Magnetic force	V-grooves and back side squareness	Top and bottom, left and right parallelism
634-067-01H	80x70x95mm	6-67mm	64kgf	5μm	5μm
634-067-02H	100x70x95mm	6-67mm	80kgf	5μm	5μm
634-067-03H	120x70x95mm	6-67mm	96kgf	6μm	6μm

Matched pair

Code	Size(LxWxH)	For shaft range(Ød)	Magnetic force	V-grooves and back side squareness	Top and bottom, left and right parallelism	Height difference of a matched pair
634-067-01HP	80x70x95mm	6-67mm	64kgf	5μm	5μm	10μm
634-067-02HP	100x70x95mm	6-67mm	80kgf	5μm	5μm	10μm
634-067-03HP	120x70x95mm	6-67mm	96kgf	6μm	6μm	10μm

SERIES 635 MAGNETIC V-BLOCK SET

ATTENTION: NOT HARDENED

- Hold cylindrical workpieces for inspection, not suitable for machining due to weak magnetic force
- Two V-blocks per set
- Hardness HRB 70



635-150-01

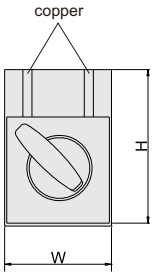

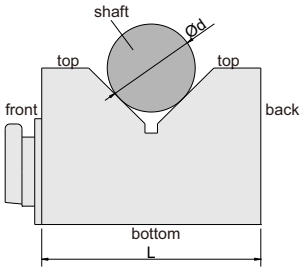

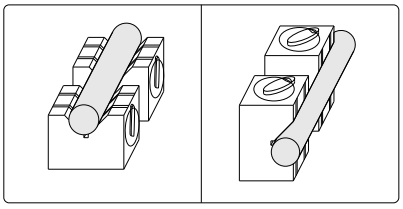

Code	Size(LxWxH)	Range of shafts (Ød)	Magnetic force	Parallelism of V groove to bottom and back sides	Height difference of a matched pair
635-070-01	70x40x50mm	6 - 46mm	8kgf	10μm	10μm
635-150-01	150x50x100mm	6 - 125mm	14kgf	10μm	10μm

SERIES 631 GRANITE V-BLOCK SET

Certificate

- Supplied a pair, for holding long cylindrical workpiece

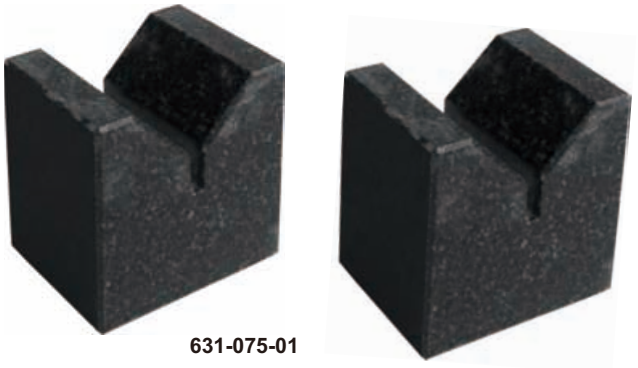

631-075-01

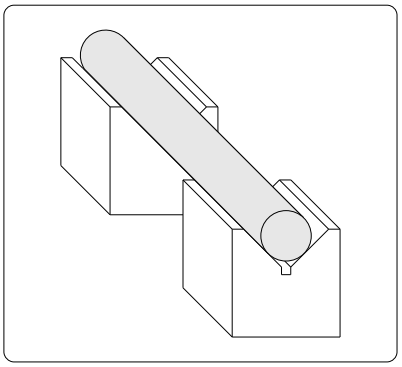

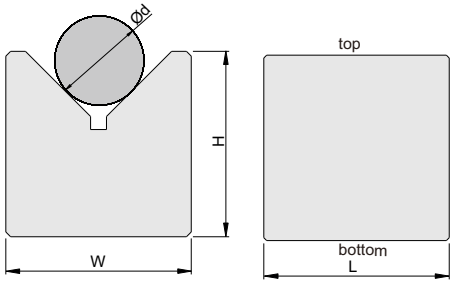

Code	Size(LxWxH)	For shaft range(Ød)	Parallelism between top and bottom, left and right	Height difference between a pair
631-075-01	50x70x70mm	6 - 70mm	5μm	5μm
631-099-01	50x100x70mm	6 - 84mm	5μm	5μm

With manufacturer inspection certificate

SERIES 632 V-BLOCK SET

- Two V blocks per set
- Made of hardened tool steel

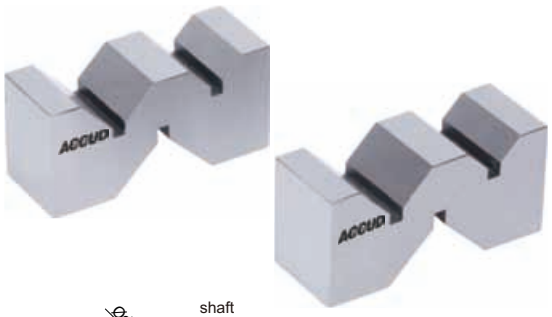

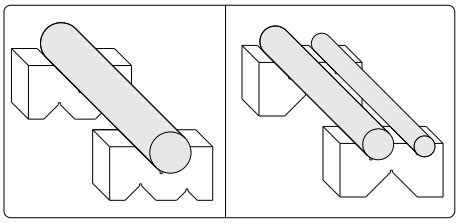

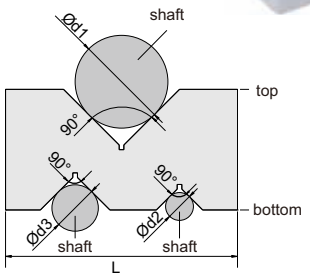

unit: mm

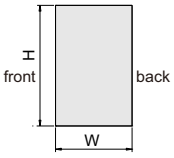

Code	Size (LxWxH)	Range of shafts(Ød1)	Range of shafts(Ød2)	Range of shafts(Ød3)	Parallelism of V grooves to top and bottom sides	Squareness of V grooves to front and back sides	Height difference of a matched pair
632-002-01	50x19x24mm	3-32mm	3-16mm	3-22mm	5μm	5μm	5μm
632-003-01	75x24x35mm	3-50mm	3-20mm	3-32mm	5μm	5μm	5μm
632-004-01	100x33x52mm	6-68mm	5-26mm	5-40mm	5μm	5μm	5μm
632-006-01	150x50x80mm	6-100mm	5-40mm	5-60mm	5μm	5μm	5μm

SERIES 636 V-BLOCK SET

- Hold cylindrical workpieces for inspection and machining
- Two V-blocks per set
- V groove on the top for large shafts
- V groove on the bottom for small shafts

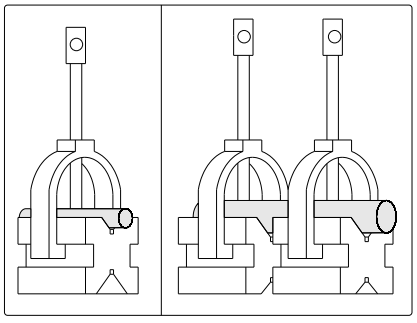



636-045-01

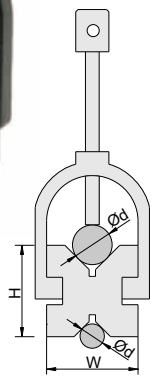

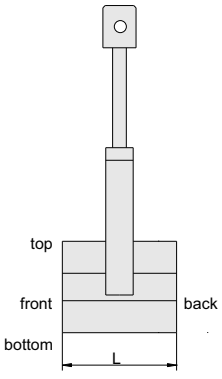

Code	Size(LxWxH)	For shaft range(Ød)	V grooves to top and bottom sides parallelism	V grooves to front and back sides squareness	Height difference of a matched pair
636-045-01	45x41x35mm	5-40mm	5μm	5μm	5μm
636-070-01	70x63x44mm	7-60mm	5μm	5μm	5μm
636-125-01	125x90x70mm	7-80mm	5μm	5μm	5μm

SERIES 637 V-BLOCK SET

- Hold cylindrical workpieces for inspection and machining
- Two V-blocks per set
- V groove on the top for large shafts



637-035-01

unit: mm

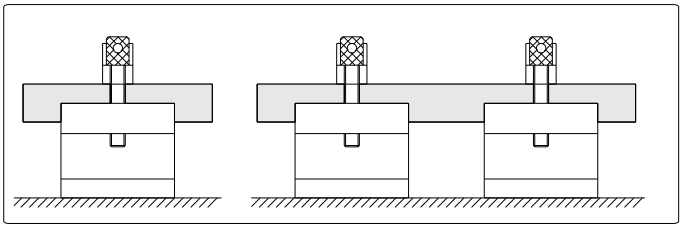

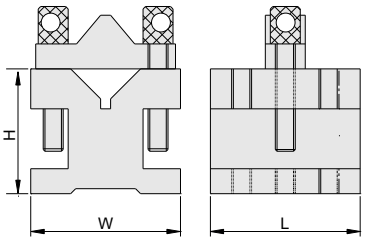

Code	Size(LxWxH)	For shaft range(Ød)	V grooves to top and bottom sides parallelism	V grooves to front and back sides squareness	Height difference of a matched pair
637-035-01	35x35x30mm	3 - 16mm	5μm	5μm	5μm
637-060-01	60x60x50mm	5 - 34mm	5μm	5μm	5μm
637-105-01	105x105x78mm	8 - 66mm	5μm	5μm	5μm

638 V-BLOCK SET



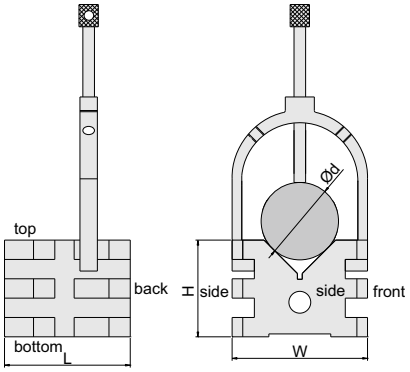

- Hold cylindrical or rectangular workpieces for inspection and machining
- Two V-blocks per set
- Hardened to HRC60±2
- Applicable for cylinder with diameter (Ød): 6 - 50mm
- Applicable for rectangular workpieces with thickness: ≤35mm

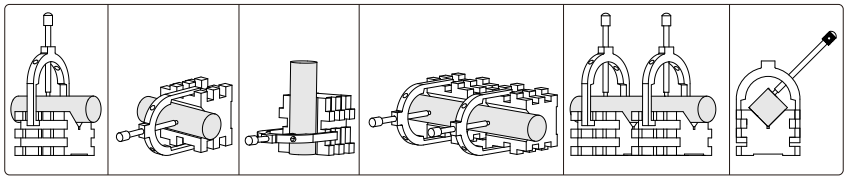

Code	Size (LxWxH)	Parallelism of V groove to top and bottom sides	Squareness of V groove to front and back sides	Height difference of a matched pair
638-070-01	60x70x50mm	8μm	8μm	8μm

640 V-BLOCK SET

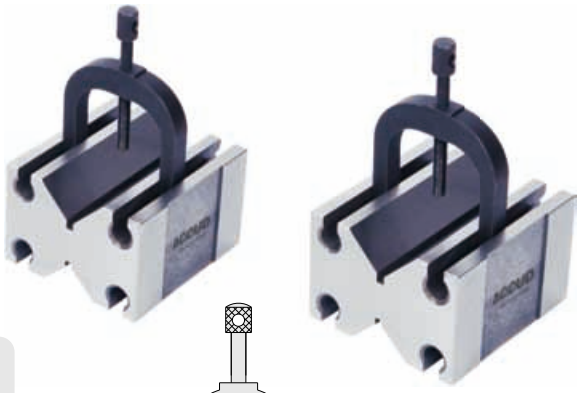

- Hold cylindrical workpieces for inspection and machining
- Two V-blocks per set
- Side lie-down use is possible
- Hardened to HRC60±2
- V groove on the top for large shafts
- V groove on the bottom for small shafts

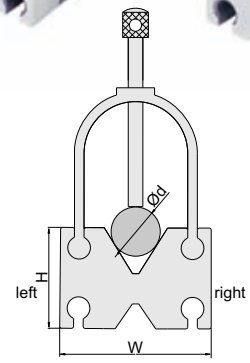

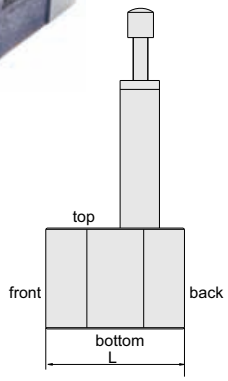

Code	Size (LxWxH)	Range of shafts (Ød)	Parallelism of both V grooves to top, bottom, left, right sides	Squareness of both V grooves to front and back sides	Height difference of a matched pair
640-001-01	65x70x45mm	4-35mm	5μm	5μm	5μm

639 V-BLOCK

- Hold cylindrical workpieces for inspection and machining
- Hardened to HRC60±2



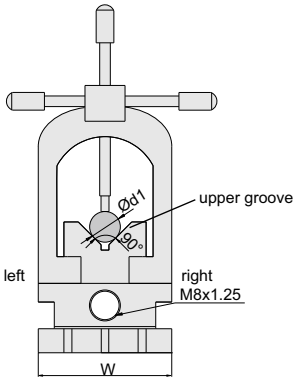

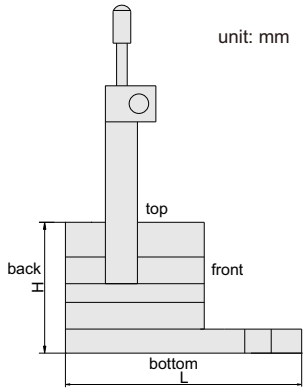

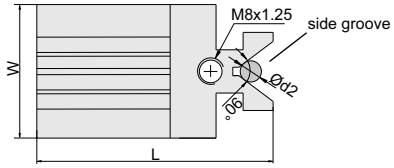

Code	Size (LxWxH)	Range of shafts (Ød1 and Ød2)	Parallelism of upper groove to bottom, left and right sides	Squareness of upper groove to back side	Parallelism of side groove to back side
639-090-01	90x48x48mm	5-33mm	5μm	5μm	5μm

SERIES 630 V-BLOCK SET

- For positioning cylindrical workpieces
- Two V-blocks per set
- Each V-block has four 90° V-grooves
- Hardness HB 170-241



630-006-11

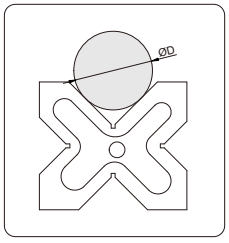

unit: mm

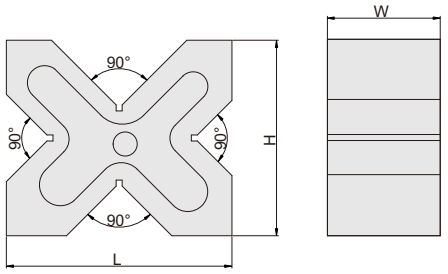

Code	Size(LxHxW)	Range of shafts(Ød)	Parallelism of four grooves to all sides	Height difference of a matched pair
630-006-11	150×130×75mm	8-120mm	15μm	20μm
630-008-11	200×170×90mm	12-180mm	15μm	20μm

SERIES 628 ROLLER BEARING V-BLOCK SET

- Runout accuracy: 5μm
- Parallelism of bearings to bottom: 12μm
- Two V-blocks per set
- Workpieces don't get damaged due to bearings
- Suitable for heavy workpieces



628-060-02

Application

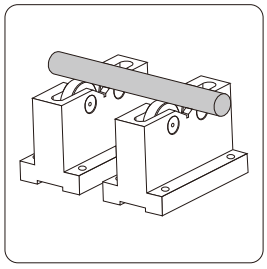

unit: mm

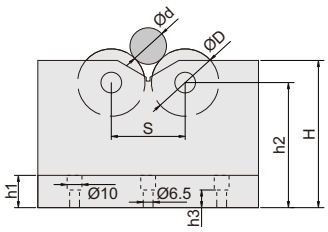

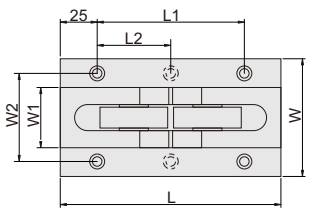

Code	Size(LxWxH)	Code of bearings	Diameter of bearings(ØD)	Range of shafts(Ød)	Load capacity	W1	W2	h1	h2	h3	L1	L2	S
628-060-02	150x60x100mm	1604 ZZ	42mm	25-70mm	500kg	22	44	20	85	12	100	-	60
628-080-02	150x80x100mm	6303 ZZ	47mm	5-55mm	1000kg	40	60	22	85	12	100	-	50
628-100-02	230x100x150mm	6306 ZZ	72mm	70-200mm	1000kg	60	80	30	124	20	180	90	120

629 MAGNETIC INDUCTION V-BLOCK SET

ATTENTION: NOT HARDENED, DO NOT ROTATE WORKPIECES ON V-BLOCKS

- Hold cylindrical workpieces for inspection and machining
- To be used on magnetic chucks
- Two V-blocks per set
- V groove on the top for large shafts
- V groove on the bottom for small shafts
- Hardness HRB70
- Non-magnetic copper strips



Application

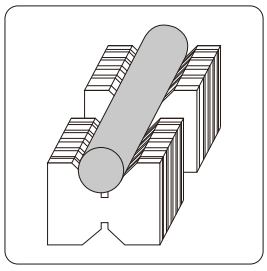

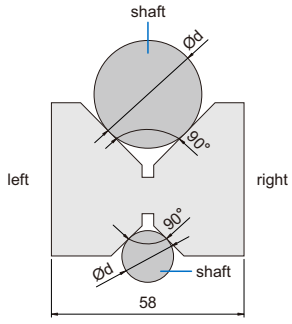

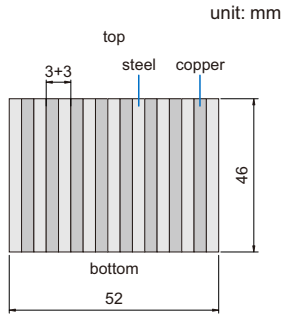

Code	Size (LxWxH)	Range of shafts(Ød)	Pole pitch	Parallelism of both V grooves to top and bottom sides	Height difference of a matched pair
629-002-01	52x58x46mm	6-56mm	3+3mm	10μm	10μm

SERIES 610 PERMANENT MACNETIC CHUCK

ATTENTION: NOT HARDENED

- The magnetic pole arrangement is dense and can hold thin and small workpieces
- Parallelism of top to bottom: 0.02mm/300mm



610-250-11

Accessories (included)



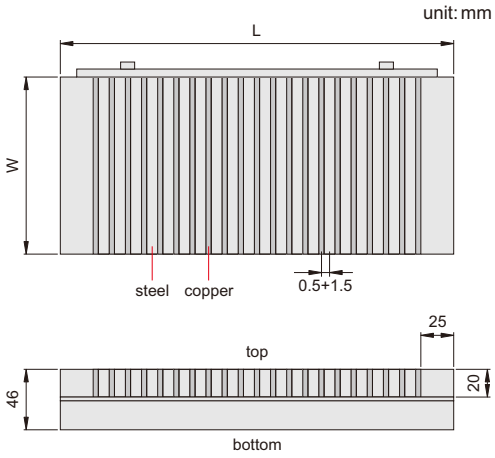

Code	Table size (LxW)	Magnetic force	Pole pitch
610-175-11	175x100mm	8kgf/cm^2	0.5+1.5mm
610-250-11	250x125mm	8kgf/cm^2	0.5+1.5mm
610-150-11	150x150mm	8kgf/cm^2	0.5+1.5mm
610-300-11	300x150mm	8kgf/cm^2	0.5+1.5mm
610-350-11	350x150mm	8kgf/cm^2	0.5+1.5mm
610-400-11	400x150mm	8kgf/cm^2	0.5+1.5mm
610-450-11	450x150mm	8kgf/cm^2	0.5+1.5mm
610-400-12	400x200mm	8kgf/cm^2	0.5+1.5mm
610-450-12	450x200mm	8kgf/cm^2	0.5+1.5mm
610-500-11	500x200mm	8kgf/cm^2	0.5+1.5mm

SERIES 641 PARALLEL SET

- Parallelism between top and bottom: 5μm
- Height difference of a matched pair: 5μm
- Hardened to HRC55-60
- Made of alloy tool steel



641-014-01

unit: mm

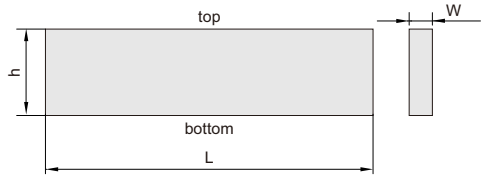

Code	Parallels per set	Length(L)	Thickness(W)	Height(h)
641-808-16	8pairs	160mm	8mm	12, 17, 22, 25, 28, 32, 36, 38mm
641-808-20	8pairs	200mm	8mm	17, 22, 26, 28, 32, 36, 38, 42mm
641-409-16	9pairs	160mm	4mm	10, 14, 18, 22, 26, 30, 34, 38, 42mm
641-310-01	10pairs	150mm	3mm	13, 16, 19, 22, 25, 28, 31, 35, 38, 41mm
641-014-01	14pairs	150mm	10mm	14, 16, 18, 20, 22, 24, 26, 28, 30, 32, 35, 40, 45, 50mm

SERIES 641 PARALLEL SET



641-100-20

- Parallelism between top and bottom: 5um
- Height difference of a matched pair: 5um
- Made of alloy tool steel
- Hardened to HRC55-60

unit: mm

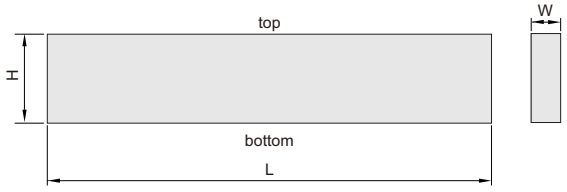

Code	Parallels per set	Length(L)	Height (H)xThickness(W)
641-100-20	20 pairs	100mm	5x2, 10x2, 15x2, 20x2, 6x3, 11x3, 16x3, 21x3, 7x4, 12x4, 17x4, 22x4, 8x5, 13x5, 18x5, 23x5, 9x6, 14x6, 19x6, 24x6mm
641-125-24	24 pairs	125mm	11x8, 16x8, 21x8, 26x8, 31x8, 36x8, 13x10, 18x10, 23x10, 28x10, 33x10, 38x10, 15x12, 20x12, 25x12, 30x12, 35x12, 40x12, 17x14, 22x14, 27x14, 32x14, 37x14, 42x14mm
641-150-24	24 pairs	150mm	11x8, 16x8, 21x8, 26x8, 31x8, 36x8, 13x10, 18x10, 23x10, 28x10, 33x10, 38x10, 15x12, 20x12, 25x12, 30x12, 35x12, 40x12, 17x14, 22x14, 27x14, 32x14, 37x14, 42x14mm

615 MAGNETIC INDUCTION PARALLEL SET

- To be used on magnetic chucks
- Two parallels per set
- Hardness HRB70
- Copper magnetic strips



Application

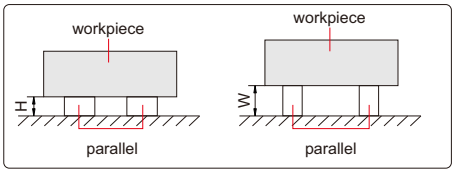

unit: mm

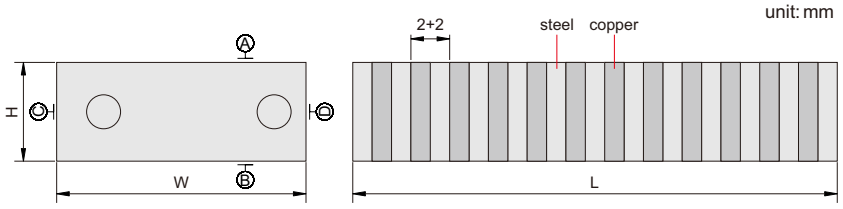

Code	Size(LxWxH)	Pole pitch	Parallelism between A and B	Parallelism between C and D	Height differenceof a matched pair
615-004-02	100x50x25mm	2+2mm	10μm	10μm	10μm

600 PARALLEL/SQUARE SETS

- Pairs of matched blocks for positioning and set-up
- Hardness HRC60±2



unit: mm

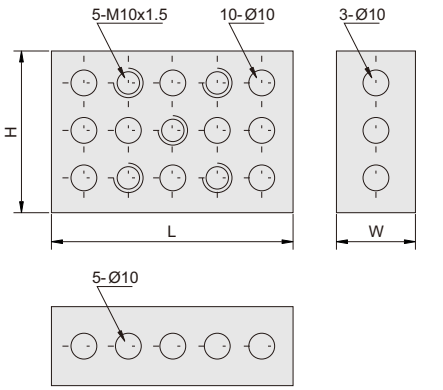

screws and wrench (included)



Code	Size(LxHxW)	Size accuracy	Squareness	Parallelism	Height difference of a matched pair
600-123-11	75x50x25mm	5μm	5μm/25mm	5μm	5μm

SERIES 571 ANGLE GAUGE BLOCK SET

- For angle set-up in tooling, production and inspection
- Hardness HRC55



571-010-02

unit: mm

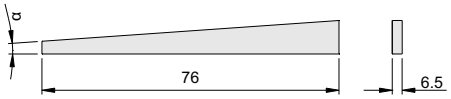

Code	Blocks per set	Accuracy	Sharp	Angle
571-010-02	10	±20"	triangle	1°, 2°, 3°, 4°, 5°, 10°, 15°, 20°, 25°, 30°
571-012-01	12	±20"	triangle	1/4°, 1/2°, 1°, 2°, 3°, 4°, 5°, 10°, 15°, 20°, 25°, 30°

646 UNIVERSAL ANGLE PLATE SET

- For angle set-up in tooling, production and inspection
- Hardness HRC55

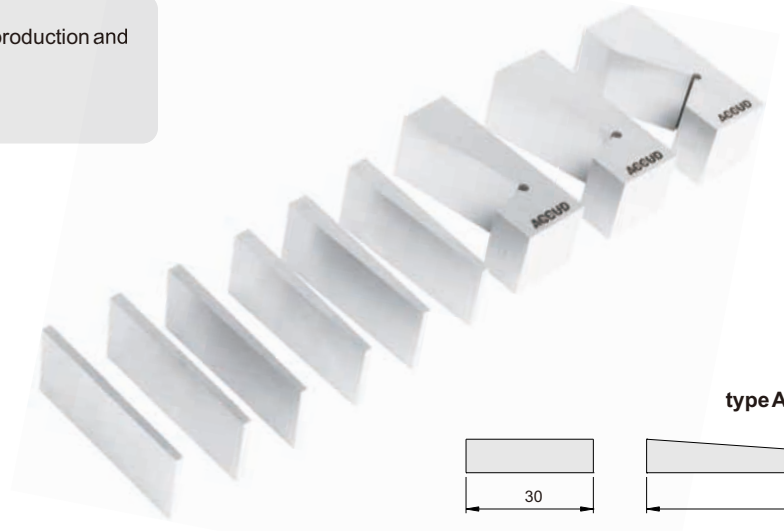

unit: mm

type A

type B

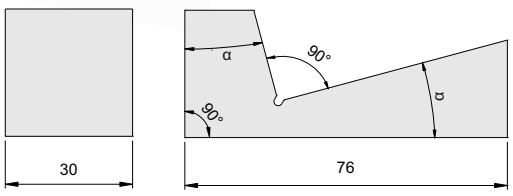

Code	Quantity	Angle α	Type	Accuracy
646-009-01	9pcs	½°, 1°, 2°, 3°, 4°, 5°	type A	±1'
		10°, 15°, 30°	type B	

SERIES 619 ADJUSTABLE ANGLE BLOCK

- Made of hardened tool steel
- With locking screw



619-003-01

unit: mm

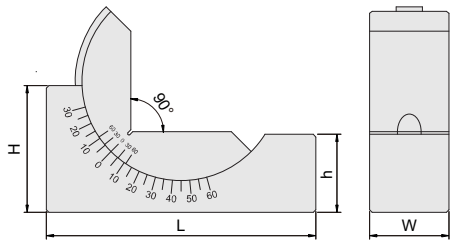

Code	Size(LxWxH)	Adjustable angle	Graduation of angle	Accuracy of angle	h
619-003-01	75x25x36mm	15° - 0° - 60°	10 minutes	15 minutes	25
619-004-01	102x30x49mm	15° - 0° - 60°	10 minutes	15 minutes	30
619-004-02	102x46x49mm	15° - 0° - 60°	10 minutes	15 minutes	30

SERIES 651 SINE BAR

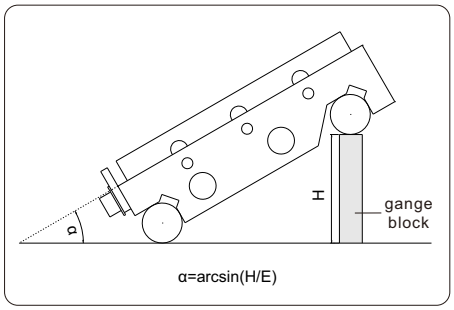



651-005-01

unit: mm

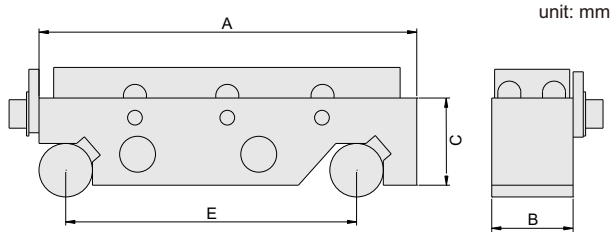

Code	Roller distance (E)	Table size(AxB)	Accuracy of α at 30°	C
651-005-01	100mm	130x25mm	±8"	25
651-005-02	100mm	130x83mm	±16"	30
651-010-01	200mm	250x40mm	±8"	40
651-010-02	200mm	250x85mm	±16"	40

SERIES 652 PRECISION VISE

- Parallelism: 5μm/100mm
- Squareness: 5μm/100mm
- Made of alloy steel
- Hardness HRC56-58

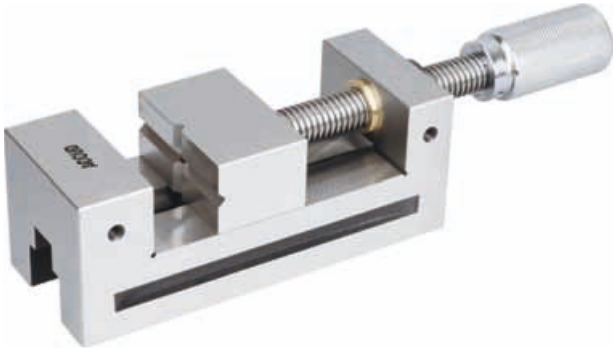

652-120-01

unit: mm

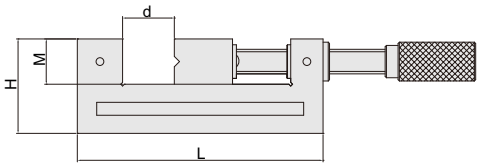

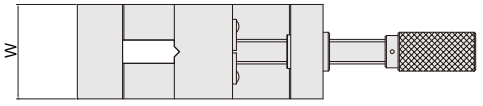

Code	Jaw opening(d)	Jaw width(W)	L	H	M
652-073-01	73mm	63mm	176	63	30
652-076-01	76mm	73mm	190	73	35
652-120-01	120mm	98mm	255	82	40

SERIES 652 PRECISION VISE

- Parallelism: 5μm/100mm
- Squareness: 5μm/100mm
- Made of alloy steel
- Hardness HRC58-60

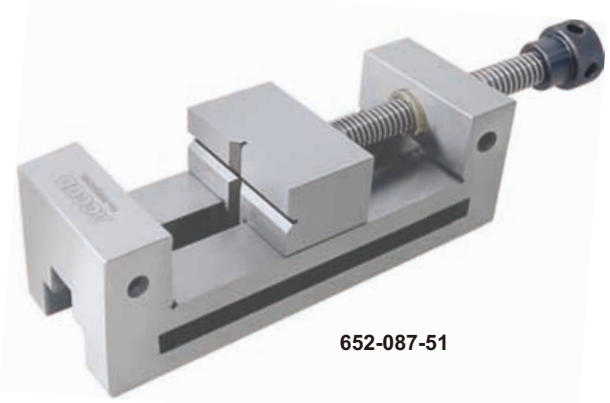

652-087-51

unit: mm

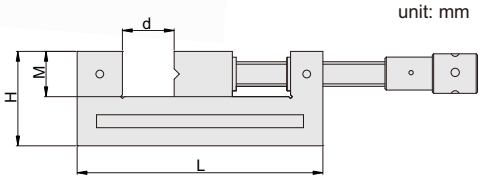

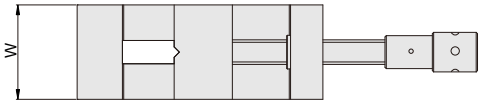

Code	Jaw opening(d)	Jaw width(W)	L	H	M
652-036-51	0-36mm	38mm	115	48	25
652-067-51	0-67mm	50mm	150	50	25
652-087-51	0-87mm	63mm	185	63	32
652-102-51	0-102mm	73mm	205	70	35
652-102-52	0-102mm	80mm	215	80	40
652-127-51	0-127mm	88mm	245	80	40
652-127-52	0-127mm	100mm	255	90	45
652-162-51	0-162mm	125mm	295	100	50
652-175-51	0-175mm	150mm	315	100	50
652-200-51	0-200mm	200mm	350	110	55

SERIES 653 QUICK MOVING PRECISION VISE

- Four sides with grooves
- Parallelism: 5μm/100mm
- Squareness: 5μm/100mm
- Made of alloy steel
- Hardness HRC58-60



653-020-51

unit: mm

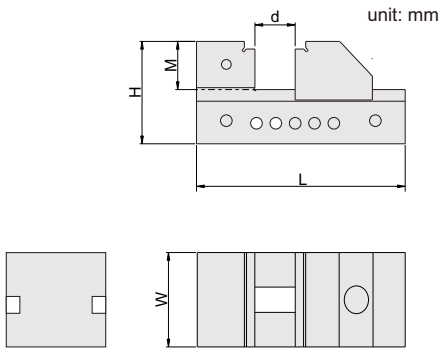

type A

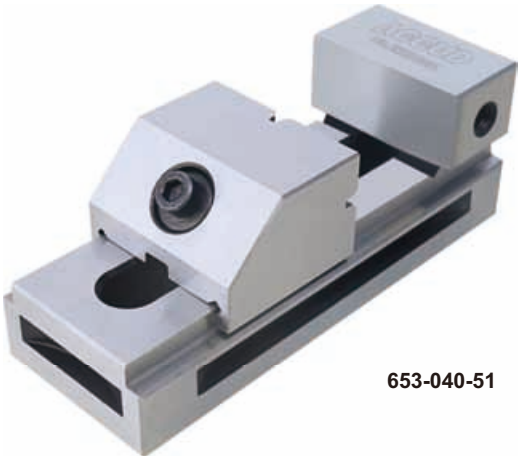

653-040-51

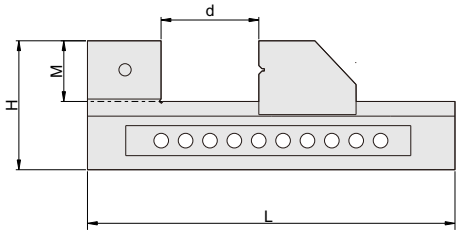

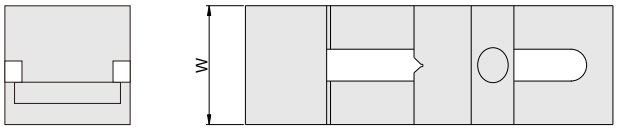

type B

Code	Jaw opening(d)	Jaw width(W)	Type	L	H	M
653-020-51	0-20mm	25mm	A	65	29	9.3
653-040-51	0-40mm	38mm	B	100	48	23
653-065-51	0-65mm	50mm	B	135	50	25
653-085-51	0-85mm	63mm	B	170	63	32
653-100-51	0-100mm	73mm	B	185	70	35
653-100-52	0-100mm	80mm	B	195	80	40
653-125-51	0-125mm	88mm	B	230	80	40
653-125-52	0-125mm	100mm	B	240	90	45
653-160-51	0-160mm	125mm	B	280	100	50
653-175-51	0-175mm	150mm	B	300	100	50
653-208-51	0-208mm	200mm	B	350	110	55

SERIES 653 PRECISION VISE

- Made of hardened alloy steel
- Parallelism and squareness between A, B, C, D, E and F: 5μm /100mm
- Hardness HRC56-58



653-003-01

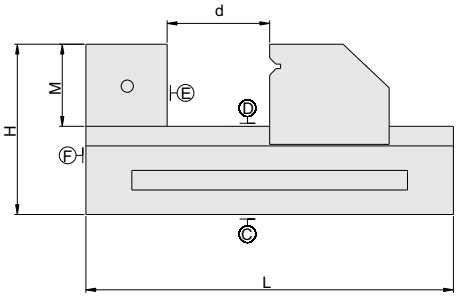

unit: mm

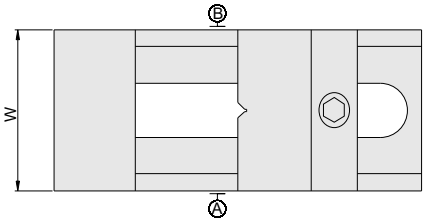

Code	Jaw opening(d)	Jaw width(W)	L	H	M
653-003-01	76mm	50mm	150	53	25
653-005-01	100mm	73mm	190	70	35

656 PRECISION UNIVERSAL VISE

- Horizontal rotary: range 360°, graduation 0.05°
  Vertical incline: range 45°, graduation 0.05°
- With vertical incline adjust knob
- Parallelism and squareness between A, B, C and D: 5μm/100mm, parallelism between D and E at 0°: 10μm/100mm
- Made of tool steel
- Hardness HRC56-58

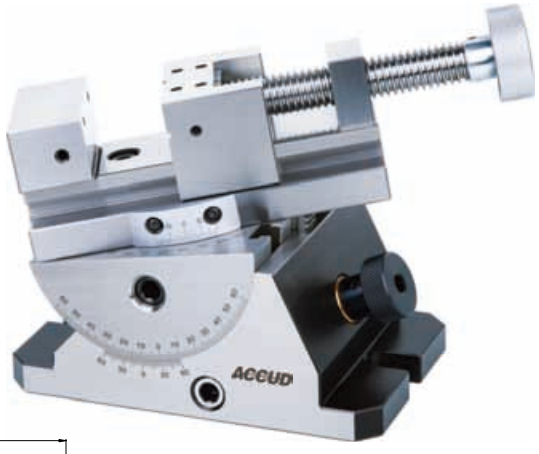

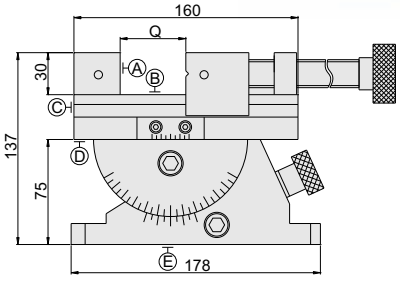

unit: mm

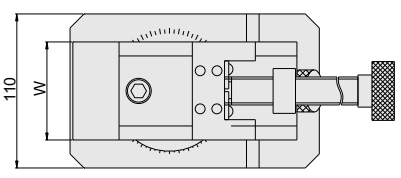

Code	Jaw opening(Q)	Jaw width(W)
656-080-01	0-80mm	70mm

657 PRECISION SINE VISE

- Parallelism: 3μm/100mm
- Squareness: 5μm/100mm
- Accuracy of angle: ±20"
- Made of SKS tool steel, subzero treatment
- Hardness HRC58-60



unit: mm

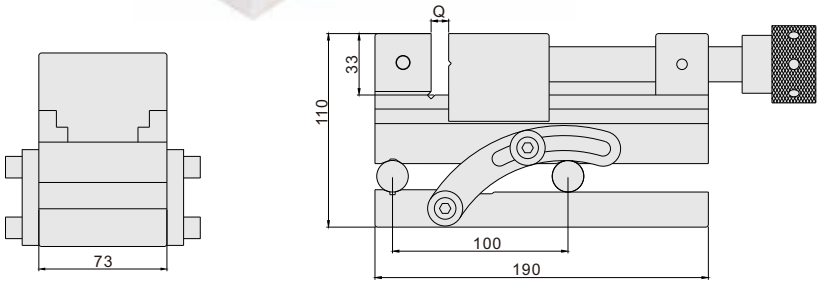

Code	Jaw opening (Q)	Jaw width	Adjustable angle
657-090-01	0-90mm	73mm	0-45°

SERIES 657 PRECISION SINE VISE

- Parallelism: 5μm/100mm
- Squareness: 5μm/100mm
- Adjustable angle: 0-55°
- Accuracy of angle: ±20 seconds
- Made of alloy steel
- Hardness HRC58-60

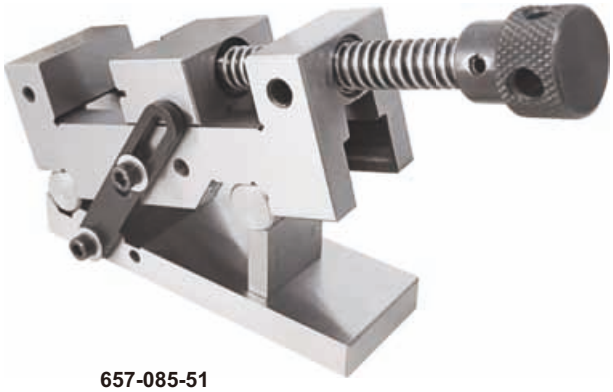

657-085-51

unit: mm

Code	Jaw opening(Q)	Jaw width(W)	Roller distance(E)	L	H	M
657-065-51	0-65mm	50mm	100mm	150	85	25
657-085-51	0-85mm	63mm	100mm	185	91.5	32
657-100-51	0-100mm	73mm	150mm	205	105	35
657-100-52	0-100mm	80mm	150mm	215	108	40
657-125-51	0-125mm	88mm	150mm	245	108	40
657-125-52	0-125mm	100mm	200mm	255	116	45
657-160-51	0-160mm	125mm	200mm	295	125	50
657-175-51	0-175mm	150mm	200mm	315	125	50

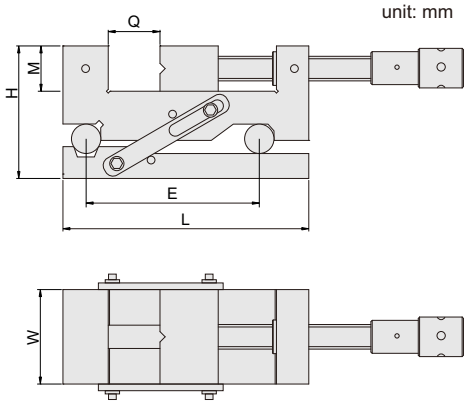

SERIES 680 3D TESTER

IP67 Shockproof

ATTENTION:
WHEN USING STANDARD PROBE, READING SHOWS MOVEMENT VALUE OF PROBE.
WHEN USING EXTENDED PROBE, READING DOES NOT SHOW MOVEMENT VALUE OF PROBE.

- Shockproof,IP67 dust/waterproof
- Mainly used for milling machines and CNC machine tools
  1. determine coordinate point on workpieces
  2. find center of holes
  3. adjust and position workpieces
- Can be used to measure length and depth
- When using standard probe, reading shows movement value of probe, for example, if probe moves 0.05mm, reading changes 0.05mm (5 graduations);
  When using extended probe, reading does not show movement value of probe
- Large working range on three axes (X, Y, Z), which avoids damage of probes due to collision by mistake



unit: mm

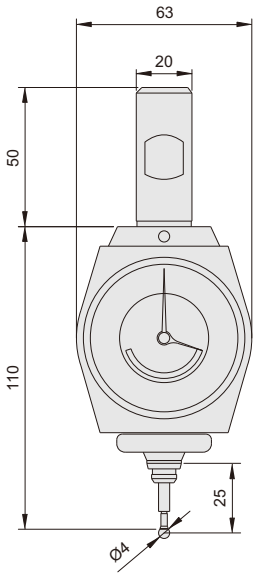

Find center of holes

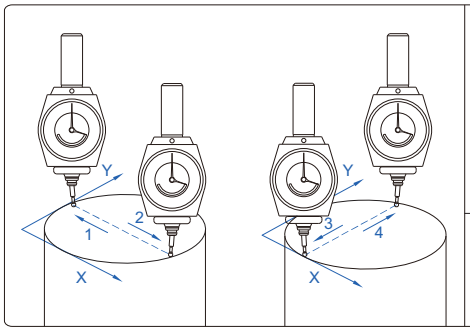

Length measurement

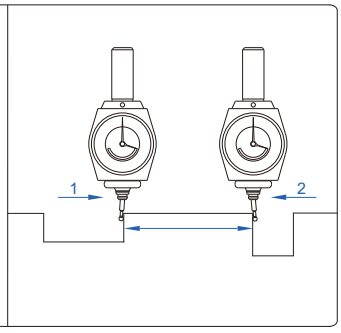

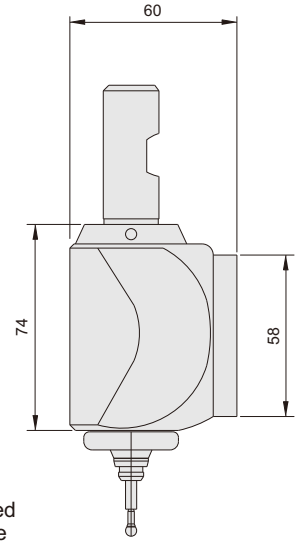

Position workpieces

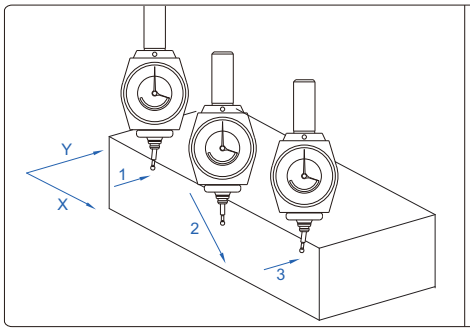

Depth measurement

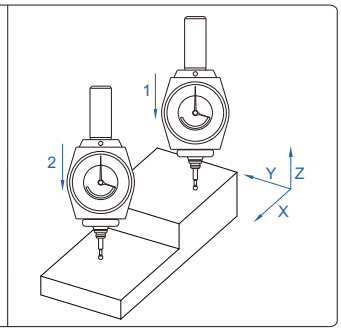

If the probe is pressed too much, the probe breaks at the breaking point, in order to prevent damage of the main body

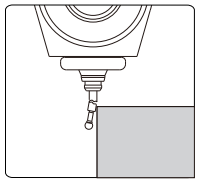

Code	Range	Graduation	Repeatability at zero(one direction)	X, Y, Z range
680-004-03	±2.0mm	0.01mm	±0.01mm	4mm

PROBE (optional)

Code	Description	L	D	Remark
680-000-40	standard probe	25	Ø4	reading shows movement value of probe
680-000-80	extended probe	65	Ø8	reading does not show movement value of probe



680-000-40



680-000-80

unit: mm

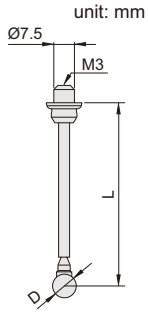

297 CENTERING INDICATOR

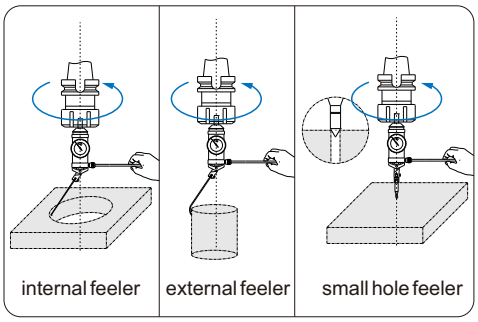

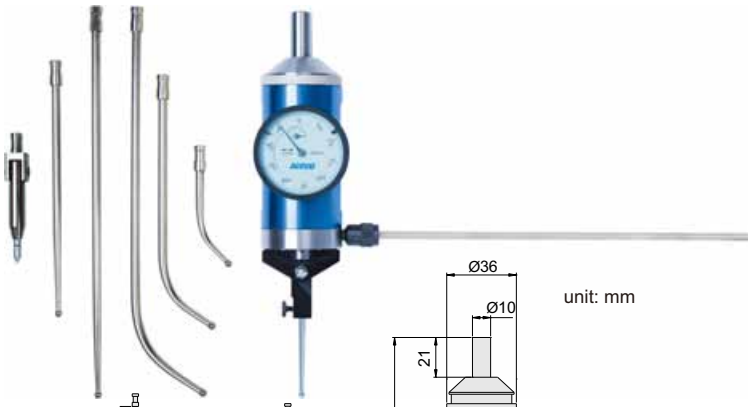

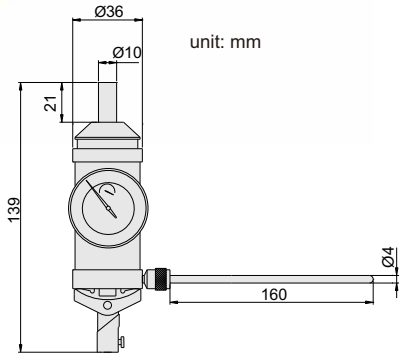

Feeler	Measuring diameter	Accuracy
A1	Ø0-2.8mm	0.03
A2	Ø0-60mm	0.03
A3	Ø0-160mm	0.03
A4	Ø0-250mm	0.03
A5	Ø3.2-80mm	0.03
A6	Ø3.2-180mm	0.03
A7	Ø3.2-280mm	0.03

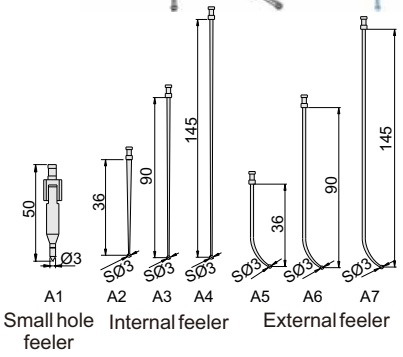

- For quick and accurate centering in boring and milling set-up
- Jeweled bearing
- Supplied with 7 type feelers

Code
297-003-11

685 DIAL TEST INDICATOR CENTERING HOLDER

- Center cylinders or holes on machine tools
- Can be used with dial test indicators

Application





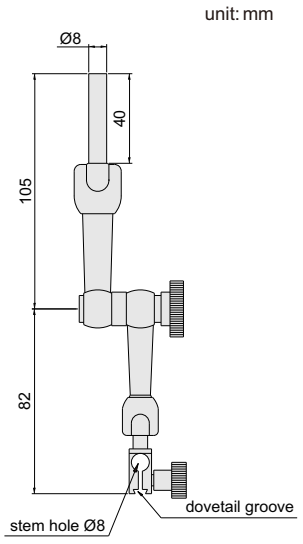

Code
685-040-01

686 INDICATOR CENTERING HOLDER

- Center cylinders or holes on machine tools
- Can be used with dial test indicators or dial indicators

Application





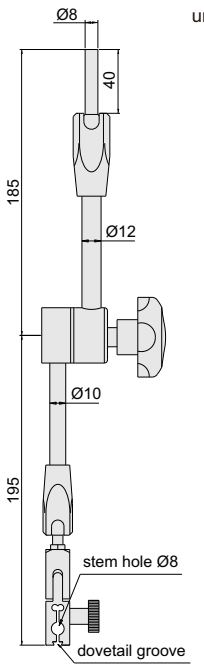

Code
686-080-01

SERIES 692 ELECTRONIC EDGE FINDER

- The LED will be light with alarm when the ballcontacts the workpiece
- Not suitable for rotating use
- Hardened shank and contact point
- Battery:23A, 12V

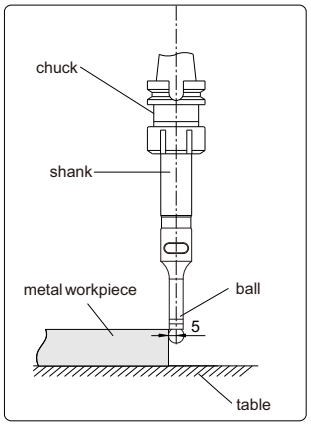

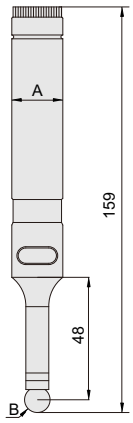



692-010-03N 692-010-32

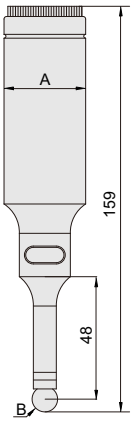

Code	Shank(A)	Contact point (B)	Accuracy
692-010-03N	Ø20mm	SØ10mm	5μm
692-010-32	Ø32mm	SØ10mm	5μm

SERIES 693 NON-MAGNETIC EDGE FINDER

Non-magnetic

- Non-magnetic
- TIN coating, hardness HV2300, extremely wear resistance
- Suitable for machine speed 400~600rpm

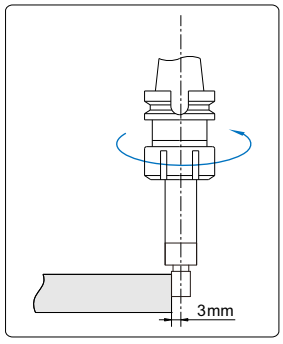



693-010-01N 693-010-31

unit: mm

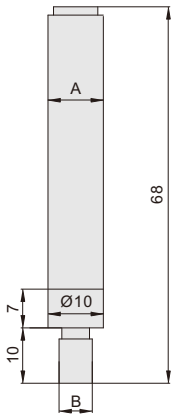

Package



Code	Shank(A)	Contact suface(B)	Accuracy	Titanium plated
693-010-01N	Ø10mm	Ø6mm	5μm	without
693-010-31	Ø10mm	Ø6mm	5μm	with

SERIES 691 CERAMIC EDGE FINDER

- Ceramic contact point, non magnetic
- Hardened shank
- Suitable for machine speed: 400-600rpm

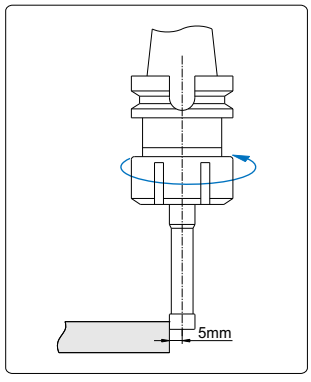



691-010-01N

unit: mm

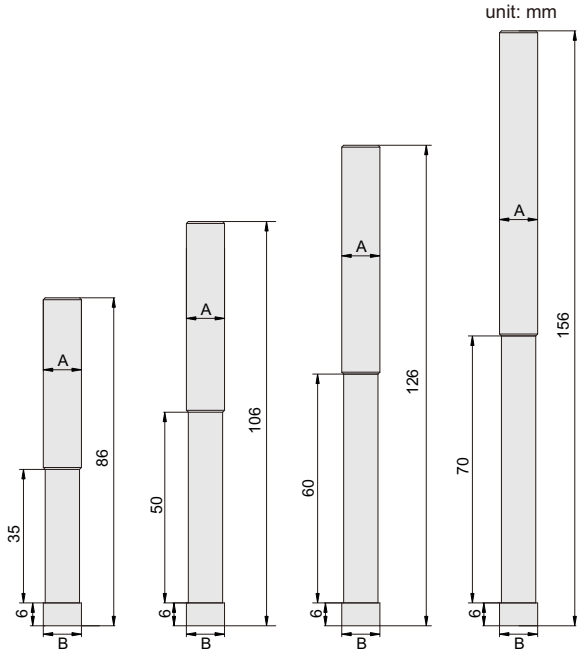

691-010-01N 691-010-02 691-010-03 691-010-04

Code	Shank(A)	Contact point (B)	Accuracy
691-010-01N	Ø10mm	Ø10mm	5μm
691-010-02	Ø10mm	Ø10mm	5μm
691-010-03	Ø10mm	Ø10mm	5μm
691-010-04	Ø10mm	Ø10mm	5μm

SERIES 691 CERAMIC EDGE FINDER

Non-magnetic

- Non-magnetic
- CrN coating, hardness HV2000, extremely wear resistance
- Suitable for machine speed 400~600rpm

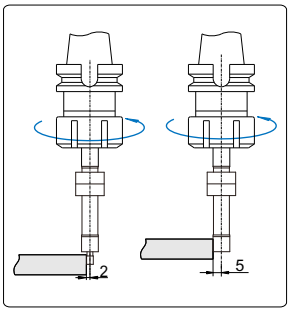

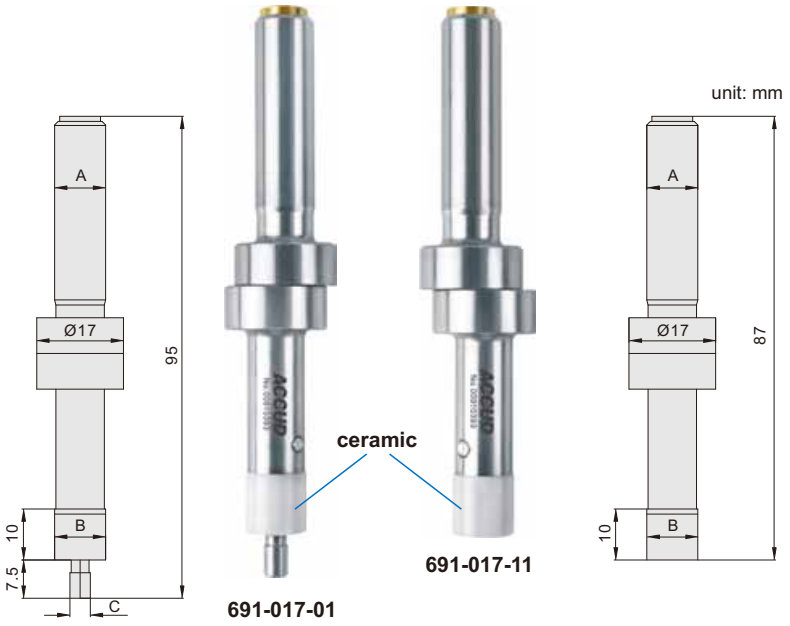

Code	Shank(A)	Contact point(B)	Contact point(C)	Accuracy
691-017-01	Ø10mm	Ø10mm	Ø4mm	5μm
691-017-11	Ø10mm	Ø10mm	-	5μm

694 EDGE FINDER

- Hardened shank and contact point
- Suitable for machine speed 400~600rpm

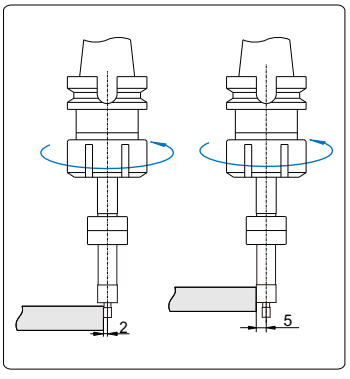

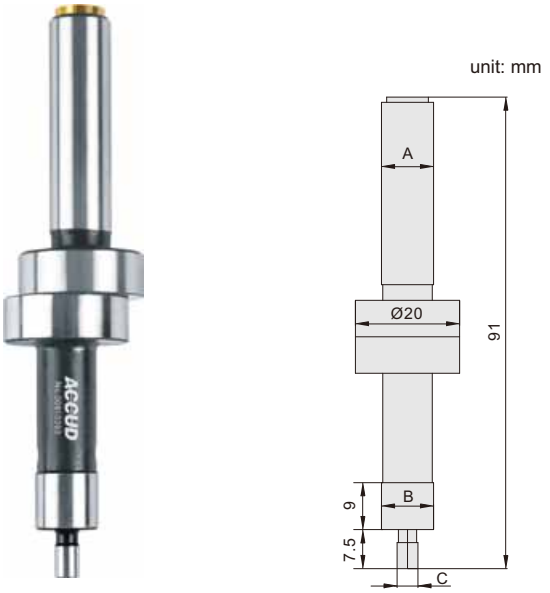

Code	Shank(A)	Contact point(B)	Contact point(C)	Accuracy
694-020-01N	Ø10mm	Ø10mm	Ø4mm	5μm

SERIES 694 NON-MAGNETIC EDGE FINDER

Non-magnetic

- Non-magnetic
- TIALN coating, hardness HV3500; TIN coating, hardness Hv2300, extremely wear resistance
- Suitable for machine speed 400~600rpm

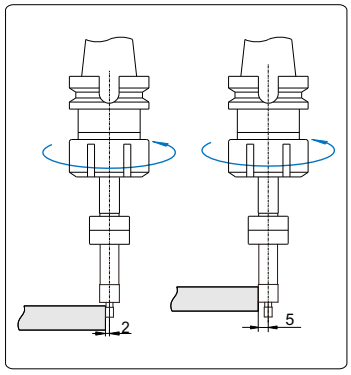



694-020-02 694-020-03

unit: mm

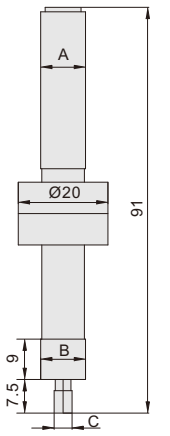

Code	Shank(A)	Contact point(B)	Contact point(C)	Accuracy
694-020-02	Ø10mm	Ø10mm	Ø4mm	5μm
694-020-03	Ø10mm	Ø10mm	Ø4mm	5μm

694 EDGE FINDER

- Hardened shank and contact point
- Suitable for machine speed 400~600rpm

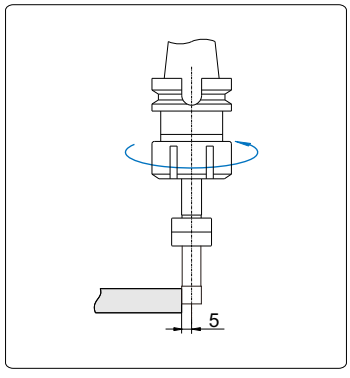



unit: mm

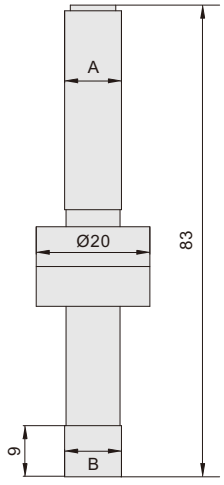

Code	Shank(A)	Contact point(B)	Accuracy
694-020-11	Ø10mm	Ø10mm	5μm

SERIES 694 NON-MAGNETIC EDGE FINDER

Non-magnetic

- Non-magnetic
- TIALN coating, hardness HV3500; TIN coating, hardness HV2300, extremely wear resistance
- Suitable for machine speed 400~600rpm

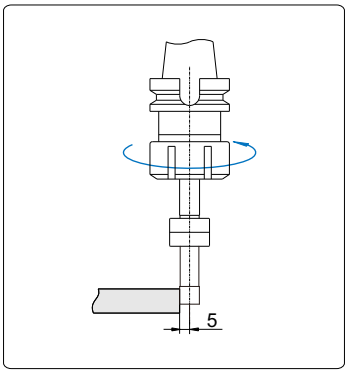



694-020-12



694-020-13

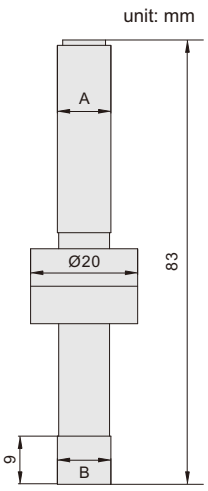

Code	Shank(A)	Contact point(B)	Accuracy
694-020-12	Ø10mm	Ø10mm	5μm
694-020-13	Ø10mm	Ø10mm	5μm

689 NON-MAGNETIC EDGE FINDER

Non-magnetic

- Non-magnetic
- TIN coating, hardness HV2300, extremely wear resistance
- Suitable for machine speed 400~600rpm

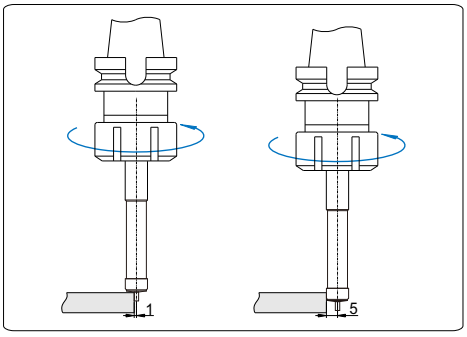



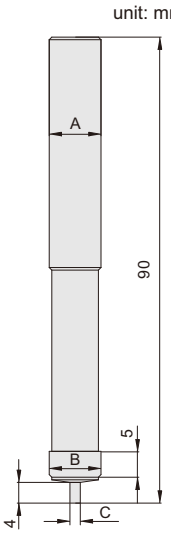

Package



Code	Shank(A)	Contact point(B)	Contact point(C)	Accuracy
689-010-02	Ø10mm	Ø10mm	Ø2mm	5μm

690 NON-MAGNETIC EDGE FINDER (DOUBLE HEAD)

Non-magnetic

- Non-magnetic
- TIN coating, hardness HV2300, extremely wear resistance
- Suitable for machine speed 400~600rpm
- Find edge or hole center

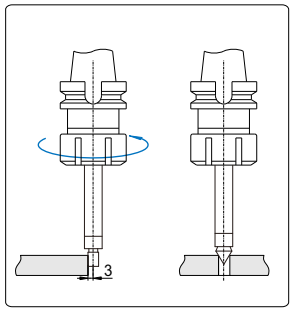



unit: mm

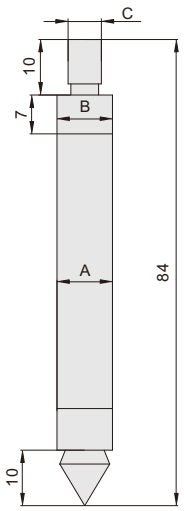

Package



Code	Shank(A)	Contact point(B)	Contact point(C)	Accuracy
690-010-01	Ø10mm	Ø10mm	Ø6mm	5μm

SERIES 688 EDGE FINDER (WITH ROTARY HEAD)

Non-magnetic

- Non-magnetic
- TIN coating, hardness HV2300, extremely wear resistance
- Suitable for machine speed 500~2000rpm

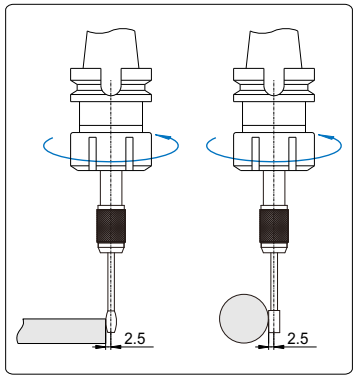



688-010-01

unit: mm

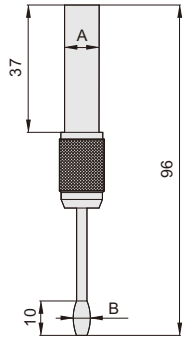

type A

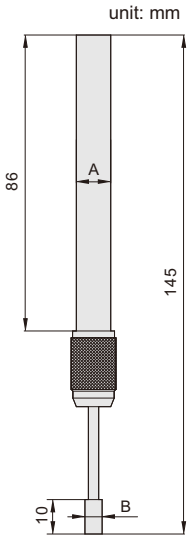

type B

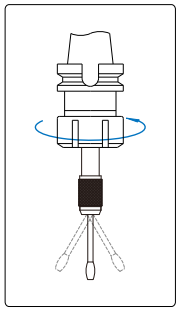

Code	Shank(A)	Contact point(B)	Accuracy	Type	Application
688-010-01	Ø10mm	Ø5mm	5μm	A	flat surface
688-010-12	Ø10mm	Ø5mm	5μm	B	arc surface

SERIES OP4000 INFRARED TRANSMISSION PROBE FOR CNC MACHINE TOOLS



OP4000-BT30-PB

unit: mm

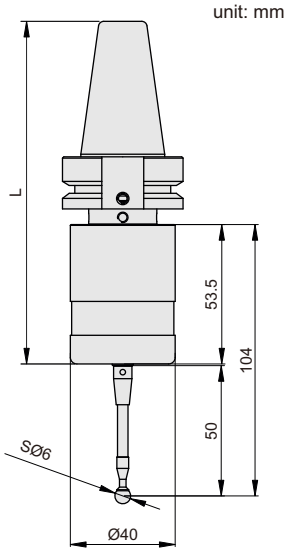

- On-machine measurement of all kinds of small and medium-sized machining centers, CNC boring, milling machines and five-axis CNC machine tools
- Automatically set the workpiece coordinate and machining reference point before CNC machining process
- Automatically measure dimension and position coordinate during CNC machining
- Measure dimension, shape and position after CNC machining is completed
- Four kinds of SSR signals such as probe status, error, low voltage and pulse are transmitted to CNC machine tools
- Working status can be displayed on receiver LED indicator
- Signal transmitting range of probe can be set
- Infrared transmission, fast response, high reliability
- The battery (5% utilization rate per shift) can be used continuously for 90 days
- Supplied with measurement software package
- Can be used in combination with zero setter with infrared transmission
- Optional accessory: styli

Application

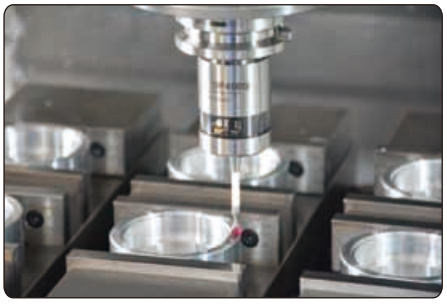

SPECIFICATION

Code	OP4000-BT30-PB	OP4000-BT40-PB	OP4000-BT50-PB
Probe length (L)	130mm	151.5mm	208.3mm
Probe diameter(ØD)	40mm	40mm	40mm
Applicable spindle *	BT30	BT40	BT50
Trigger accuracy of styli in any direction	1um		
Protection stroke triggered by styli in all directions	X and Y axis stroke: ± 12°, Z axis stroke: 5mm		
Trigger force of styli in all directions	X and Y axis: 0.5-1N, Z axis: 7.5N		
Dust/waterproof	IP68		
Power supply	2xLS14250 lithium battery		

* CAT, HSK, SK and ISO spindle probes also can be customized
* The probe should be brought with OSI-30 receiver

OSI-30 INFRARED TRANSMISSION PROBE RECEIVER FOR CNC MACHINE TOOLS



unit: mm

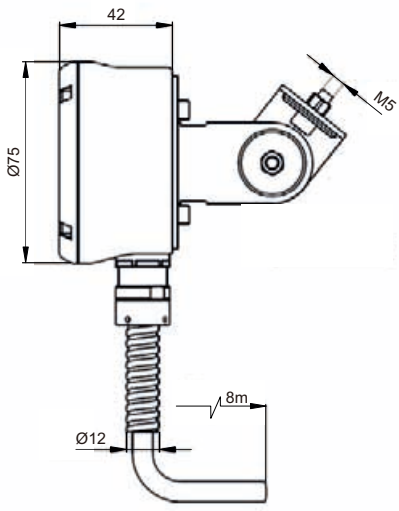

- The cable length is 8 meters
- Fixed bracket with universaladjustment function is equipped

SPECIFICATION

Protection function	low battery voltage, overstroke and signal interrupt protection *
Applicable	probe or zero setter
Infrared transmission/reception range	3m
Cable length	8m
Dust/waterproof	IP68
Power supply	input voltage: 24V±10% (DC, CNC machine main board), load current (max): 50mA

* When battery voltage is low or zero setter is in wrong state, receiver sends a signal to CNC machine to stop working

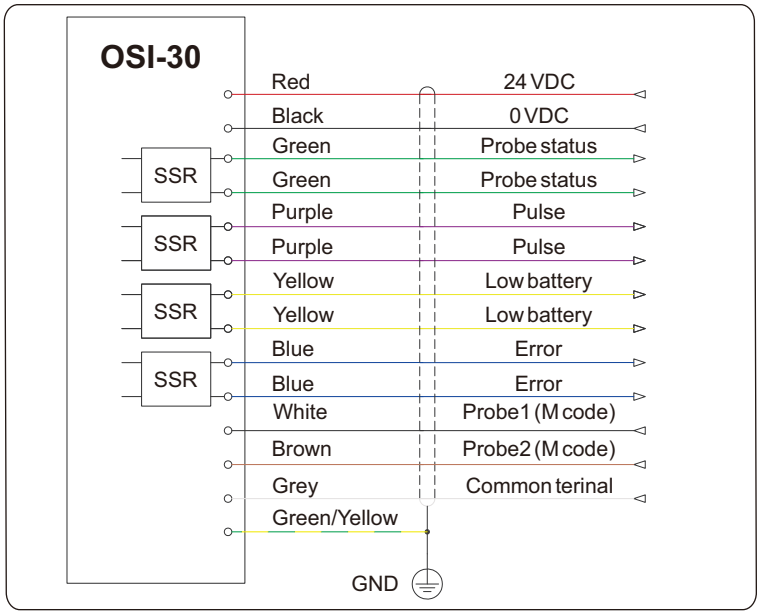

Cable diagram

697 DIGITAL ZERO SETTER

IP65 CR2032

- IP65 protection level
- Magnetic base
- With backlight, will turn on automatically when close to zero (±0.002mm)
- Turn off automatically



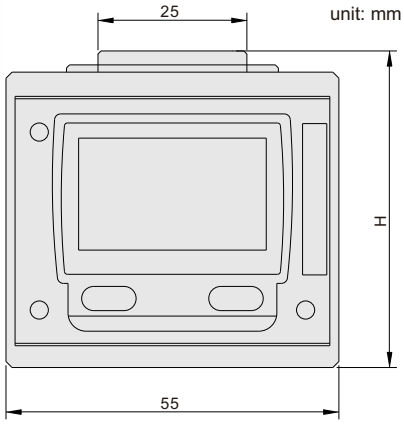

Application

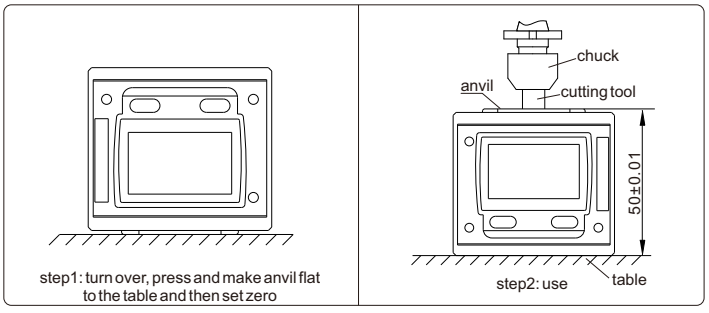

Code	Accuracy
697-050-01	±10μm

695 ZERO SET

- Magnetic base

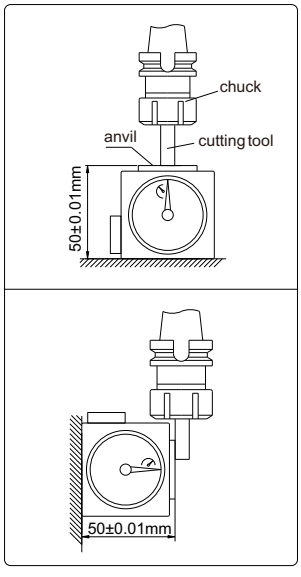



unit: mm

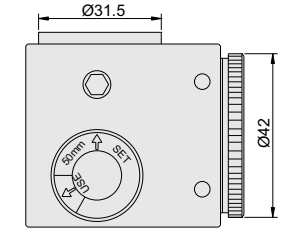

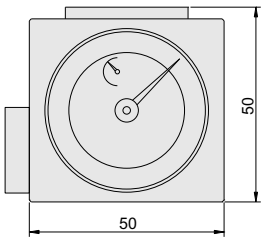

Code	Accuracy
695-050-01	±10μm

696 ZERO SET

- Magnetic base with on/off switch

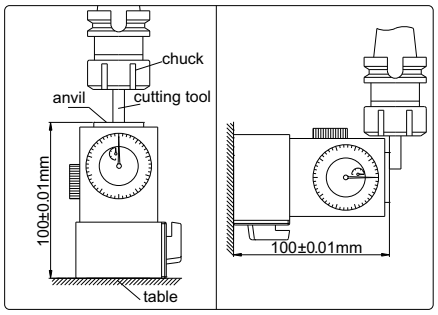



unit: mm

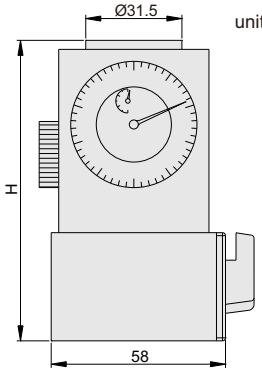

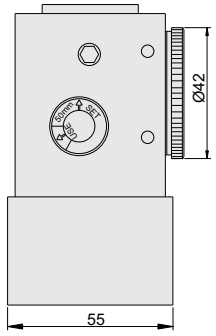

Code	Height (H)	Accuracy	Force
696-100-01	100mm	±10μm	9N

SERIES 280 2-PIECE MEASURING TOOLS SET



280-000-02

Package



Code	Include
280-000-02	10mm dial indicator (222-010-11) Magnetic stand (281-060-01)
280-001-02	1 inch dial indicator (225-025-11) Magnetic stand (281-060-01)

SERIES 280 3-PIECE MEASURING TOOL SET



280-201-03





Digital indicator for **280-200-03**



Inch dial indicator for **280-202-03**

Code	Include
280-200-03	digital indicator, range 12.7mm/0.5" **(**code**212-010-13)** flex arm locking pliers, adjustable jaw opening from 0 to 25mm
280-201-03	10mm dial indicator **(**code**222-010-11)** flex arm locking pliers, adjustable jaw opening from 0 to 25mm
280-202-03	1" inch dial indicator **(**code**225-025-11)** flex arm locking pliers, adjustable jaw opening from 0 to 25mm

280 2-PIECE MEASURING TOOLS SET

- Include:
  1) Digital caliper, range 0-150mm/0-6"
     (code **111-006-10**)
  2) Digital outside micrometer, range 0-25mm
     (code **312-001-03**)



Code
280-123-02

280 3-PIECE MEASURING TOOL SET

- Includes:
  1) Vernier caliper, range 0-150mm/0-6",
     (code **120-006-12**)
  2) Outside micrometer, range 0-25mm
     (code **321-001-01**)
  3) 90° beveled edge square, 100x70mm
     (code **832-004-10**)



Code
280-000-03

280 3-PIECE MEASURING TOOL SET

- Includes:
  1) Digital caliper, range 0-150mm/0-6" (code **111-006-12**)
  2) Outside micrometer, range 0-25mm (code **321-001-01**)
  3) 90° beveled edge square, 100x70mm (code **832-004-10**)



Code
280-000-13

280 5-PIECE MEASURING TOOL SET

- Includes:
  1) Digital caliper, range 0-150mm/0-6" (code **111-006-12**)
  2) Outside micrometer, range 0-25mm (code **321-001-01**)
  3) Dial indicator, range 10mm (code **222-010-11**)
  4) Magnetic stand (code **281-060-01**)
  5) Micrometer stand (code **383-000-00**)



Code
280-000-05

280 5-PIECE MEASURING TOOL SET

- Includes:
  1) Digital caliper, range 0-150mm/0-6" (code **111-006-12**)
  2) Outside micrometer, range 0-25mm (code **321-001-01**)
  3) Dial indicator, range 10mm (code **222-010-11**)
  4) 90° beveled edge square, 100x70mm (code **832-004-10**)
  5) Scriber, 250mm (code **995-009-01**)



Code
280-000-15

280 8-PIECE MEASURING TOOL SET

- Includes:
  1) Digital caliper, range 0-150mm/0-6" (code **111-006-12**)
  2) Outside micrometer, range 0-25mm (code **321-001-01**)
  3) Protractor(code **812-003-01**)
  4) Pitch gauge, range 0.25-7mm, 24pcs (code **922-007-24**)
  5) Radius gauge(code **941-007-34**)
  6) Feeler gauge, range 0.05-1.00mm, 20pcs (code **912-100-20**)
  7) 90° beveled edge square, 100x70mm (code **832-004-10**)
  8) Scriber (code **995-009-01**)



Code
280-000-08

280 12-PIECE MEASURING TOOL SET

- Includes:
  1) Digital caliper, range 0-150mm/0-6" (code **111-006-10**)
  2) Outside micrometer, range 0-25mm (code **321-001-01**)
  3) Dial indicator, range 10mm (code **222-010-11**)
  4) Magnetic stand (code **281-060-01**)
  5) Protractor (code **812-003-01**)
  6) Pitch gauge, range 0.25-7mm, 24pcs (code **922-007-24**)
  7) Radius gauge(code **941-007-34**)
  8) Feeler gauge, range 0.05-1.00mm, 20pcs (code **912-100-20**)
  9) 90° beveled edge square, 100x70mm (code **832-004-10**)
  10) Scriber (code **995-009-01**)
  11) Depth base (code **179-000-00**)
  12) Zero setting bar



Code
280-000-12

280 12-PIECE MEASURING TOOL SET

- Includes:
  1) Digital caliper, range 0-150mm/0-6" (code **111-006-12**)
  2) Digital outside micrometer, range 0-25mm/0-1" (code **313-001-01**)
  3) Digital indicator, range 12.7mm/0.5" (code **212-010-13**)
  4) Magnetic stand (code **281-060-01**)
  5) Protractor (code **812-003-01**)
  6) Pitch gauge, range 0.25-7mm, 24pcs (code **922-007-24**)
  7) Radius gauge(code **941-007-34**)
  8) Feeler gauge, range 0.05-1.00mm, 20pcs (code **912-100-20**)
  9) 90° beveled edge square, 100x70mm (code **832-004-10**)
  10) Scriber (code **995-009-01**)
  11) Depth base (code **179-000-00**)
  12) Zero setting bar



Code
280-001-12

280 6-PIECE WELDING GAUGE SET

- Includes:
  1) Outside micrometer, range 0-25mm (code **321-001-01**)
  2) Pipe welding gauge (code **976-045-01**)
  3) Welding gauge (code **978-006-01**)
  4) Welding gauge (code **979-020-01**)
  5) Steel rule, range 150mm/6" (code **990-006-11**)
  6) Magnifier



Code
280-000-56

280 7-PIECE WELDING GAUGE SET

- Includes:
  1) Digital caliper, range 0-150mm/0-6" (code **111-006-10**)
  2) Outside micrometer, range 0-25mm/0-1" (code **321-001-01**)
  3) Welding gauge(code **979-020-01**)
  4) Welding gauge (code **978-006-01**)
  5) Fillet weld gauge, size 3~25mm, 7 blades (code **977-025-01**)
  6) Pocket rule with sliding clip, range 150mm/6" (code **909-006-11**)
  7)Magnifier



Code
280-000-57

SERIES ES ENDOSCOPE

Data output | Charge

- 2-way directions
- With adjustable LED light
- Take pictures and record videos

VIDEO

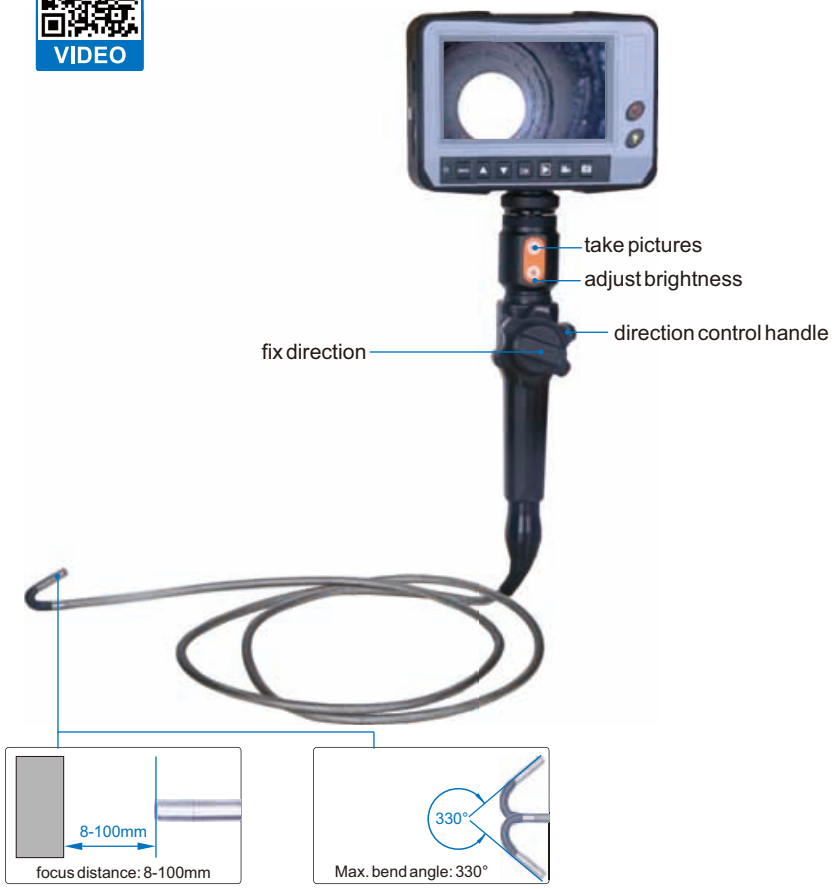

SPECIFICATION

Code	ES5515	ES5530	ES4015
Probe diameter	6mm	6mm	4.0mm
Cable length*	1.5m	3m	1.5m
Dust/waterproof probe	IP65		
Camera	0.45M Pixel		
Picture resolution	640x480		
Frame rate	30fps		
Illumination	8pcs LEDs		4pcs LEDs
Video format	AVI or MPEG4		
Memory	8G SD card		
Power supply	rechargeable battery (for 4 hours working)		
Weight	550g	750g	500g

INCLUDED ACCESSORIES

Main unit	1pc
Cable with probe	1pc
SD card 8G	1pc
AC/DC adapter	1pc
Video output cable	1pc
USB cable	1pc

* The cable length are available upon request

SERIES ESE ENDOSCOPE

Data output Charge

- Economic type
- 2-way directions
- With adjustable LED light
- Take pictures and record videos



SPECIFICATION

Code	ESE80	ESE60	ESE40
Probe diameter	8.0mm	6.0mm	4.0mm
Cable length	1m		
Dust/waterproof probe	IP65		
Camera	1M Pixel		
Picture resolution	1280x720		
Frame rate	30fps		
Scree size	4.5 inch		
Illumination	8pcs LEDs		6pcs LEDs
Video format	AVI		
Memory	32G SD card		
Power supply	rechargeable battery (for 4 hours working)		
Weight	500g	450g	400g

INCLUDED ACCESSORIES

Main unit	1pc
Cable with probe	1pc
SD card 32G	1pc
AC/DC adapter	1pc

ESP40 ENDOSCOPE

Data output | Charge

- Economic type
- Rigid cable, can set any shape
- With adjustable LED light
- Take pictures and record videos
- Language: English, Chinese, Traditional Chinese, Japanese, French, German, Korean, Portuguese, Polish, Dutch, Russian, Spanish, Turkish

Magnet



Hook

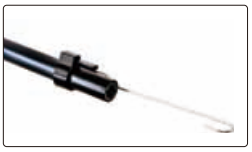

Mirror





SPECIFICATION

Probe diameter	5.5mm
Cable length	2m
Dust/waterproof probe	IP67
Camera	2M Pixel
Picture resolution	1920x1080
Frame rate	30fps
Scree size	4.3 inch
Illumination	6pcs LEDs
Video format	MP4
Memory	2G Micro TF
Power supply	rechargeable battery (for 5 hours working)
Size(LxWxH)	145x85x18mm
Weight	220g

INCLUDED ACCESSORIES

Main unit with cable	1pc
Hook	1pc
Magnet	1pc
Mirror	1pc
Recharge cable	1pc

SERIES ESS MANUAL 360° SWIVEL ENDOSCOPE

Data output Charge

- The cable with lens can be rotated at 360°
- With abjustable LED light

VIDEO



Code	Probe diameter	Cable length
ESS0410	4mm	1m
ESS0415	4mm	1.5m
ESS0420	4mm	2m
ESS0430	4mm	3m
ESS0440	4mm	4m
ESS0450	4mm	5m
ESS0610	6mm	1m
ESS0615	6mm	1.5m
ESS0620	6mm	2m
ESS0630	6mm	3m
ESS0640	6mm	4m
ESS0650	6mm	5m
ESS0660	6mm	6m
ESS0670	6mm	7m

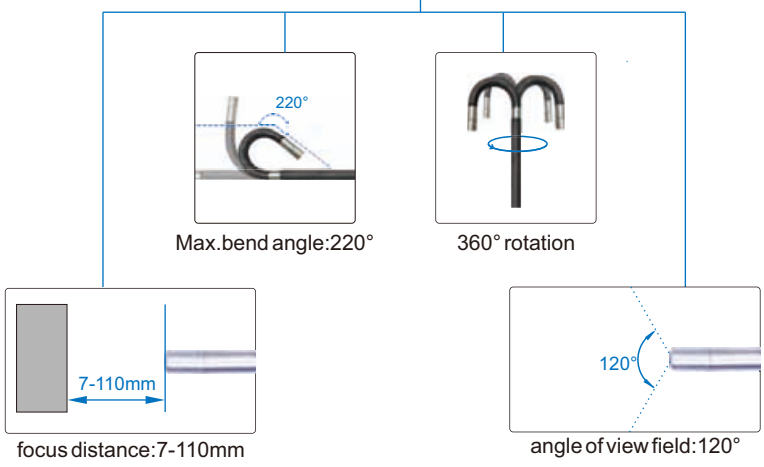

SPECIFICATION

Cable type	steel wired weaved cable
Dust/waterproof probe	IP65
Camera pixel	1M pixel
Picture resolution	1280x720
Bend control	manual joystick
Frame rate	30fps
Illumination	6 steps adjustable LED
Display size	3.5inch LCD,Max.20000Lux
Max.magnification	5X
Video format	MP4/JPEG
Memory	16G TF card
Power supply	rechargeable battery(for 4 hours working)
Weight	550g

INCLUDED ACCESSORIES

Main unit with cable	1pc
16G TF card	1pc
AC/DC adapter	1pc
USB cable	1pc

OPTIONAL ACCESSORIES

Tripod	ESS-TRIPOD
Magnet, Hook, Mirror (1 set, only for 6mm probe)*	ESS-MHM

* Should be bought with main unit

SERIES ESF MANUAL 360° SWIVEL ENDOSCOPE

Data output | Charge

- The cable can be seperated from the main unit
- The cable with lens can be rotated at 360°
- With abjustable LED light

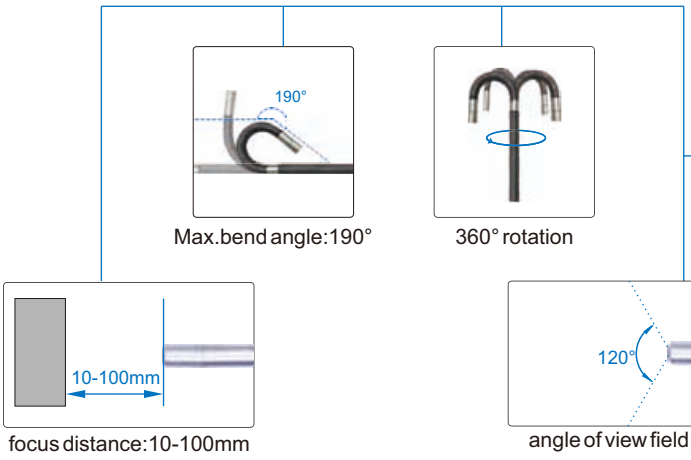



ESF0615

FRONT VIEW ( )

Code	Probe diameter	Cable length
ESF0410	3.9mm	1m
ESF0415	3.9mm	1.5m
ESF0420	3.9mm	2m
ESF0430	3.9mm	3m
ESF0440	3.9mm	4m
ESF0450	3.9mm	5m
ESF0610	6mm	1m
ESF0615	6mm	1.5m
ESF0620	6mm	2m
ESF0630	6mm	3m
ESF0640	6mm	4m
ESF0650	6mm	5m
ESF0660	6mm	6m
ESF0670	6mm	7m

SIDE VIEW ( )

Code	Probe diameter	Cable length
ESF0410S	3.9mm	1m
ESF0415S	3.9mm	1.5m
ESF0420S	3.9mm	2m
ESF0430S	3.9mm	3m
ESF0610S	6mm	1m
ESF0615S	6mm	1.5m
ESF0620S	6mm	2m
ESF0630S	6mm	3m
ESF0640S	6mm	4m
ESF0650S	6mm	5m

SPECIFICATION

Cable type	steel wired weaved cable
Dust/waterproof probe	IP67
Camera pixel	1M pixel
Picture resolution	1280x720
Bend control	manual joystick
Frame rate	30fps
Illumination	adjustable LED
Display size	3.5inch LCD,Max.100,000Lux
Max.magnification	4X
Data output	HDMI/USB
Video format	JPEG/MOV
Memory	16G TF card
Power supply	rechargeable battery(for 8 hours working)
Weight	550g

INCLUDED ACCESSORIES

Main unit with cable	1pc
16G TF card	1pc
Card reader	1pc
AC/DC adapter	1pc
USB cable	1pc

OPTIONAL ACCESSORIES

Cable with probe	CABLE-xxxx (products code)
Magnet, Hook, Mirror (1 set, only for 6mm probe)*	ESS-MHM

* Should be bought with main unit

ES2320 ENDOSCOPE FOR PIPE

Charge

VIDEO

- The cable length into the pipe, can be shown the display
- With abjustable LED light
- Language: English, Japanese, Korean, Russian, German, French, Italian, Spanish, Portuguese, Thai, Finish, Swedish





46mm support guide



80mm support guide



Remote control

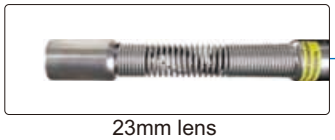

23mm lens

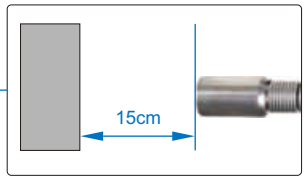

focus distance:15cm

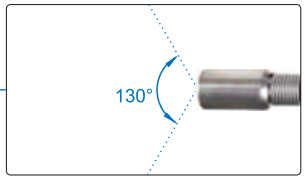

angle of view field:130°

SPECIFICATION

Probe diameter	23mm
Cable length	20m
Proble head material	304 stainless steel
Dust/waterproof probe	IP67
Camera pixel	2M Pixel
Picture resolution	1920x1080
Focus distance	15cm
Angle of view field	130°
Illumination	4 steps adjustable LED
Display size	7inch LCD
Max.magnification	3X
Video format	HD 1080P
Memory	16G SD card
Power supply	rechargeable battery(for 7 hours working)
Weight	10kg

INCLUDED ACCESSORIES

Main unit	1pc
16G SD card	1pc
12V AC/DC adapter	1pc

USB cable	1pc
Remote control	1pc
Support guide	2pcs

EST0810 WIFI ENDOSCOPE

Charge

WIFI

- The cable can be fixed in any sharp
- With adjustable LED light





the cable sharp can be fixed

Magnet

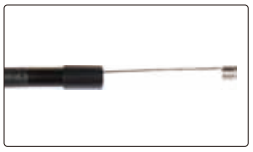

Hook

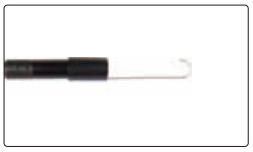

Mirror



SPECIFICATION

Probe diameter	8.5mm
Cable length	1m
Cable type	steel wired cable (the sharp can be fixed)
Dust/waterproof probe	IP65
Camera pixel	2M Pixel
Picture resolution	1600x1200
Video format	JPEG/MP4
Illumination	6 steps adjustable LED
Power supply	rechargeable battery (for 4 hours working)
Weight	287g

INCLUDED ACCESSORIES

Main unit	1pc
Cable with probe	1pc
Hook	1pc
Mirror	1pc
Magnet	1pc
USB cable	1pc

MG305 MAGNIFICATION GLASSES

AAA



Adjustable holder angle

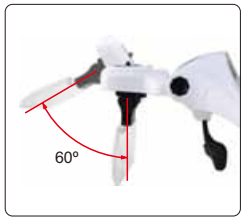

Adjustable lens position



Focus can be adjusted



Adjustable LED angle



- Lenses are made of resin
- Interchangeable lenses
- Powered supply: 3 pcs AAA batteries

2 pcs LED



Interchangeable lenses



Head band (included)



Magnification	1X, 1.5X, 2X, 2.5X, 3.5X
Lens number	5 pcs

MG30X MEASURING MAGNIFIER (WITH ILLUMINATION)

- Base with scale
- With 3 white LED and 3 UV LED
- Magnification: 30X



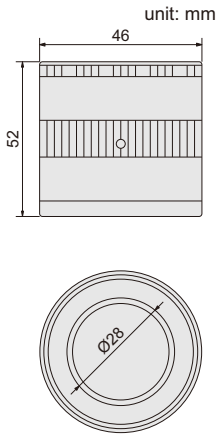

MG10 FOLDING MAGNIFIER

- Glass lens

folding





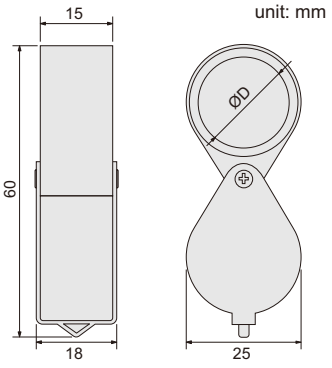

Magnification	10X
Lens diameter(ØD)	Ø21

790 TELESCOPING MAGNETIC PICK-UP

- Pick up steel parts from hidden areas
- Rotation of magnetic head: 360°
- Length of handle is adjustable, handle is made of stainless steel



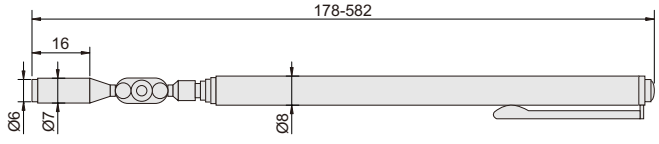

Code	Magnetic force
790-024-11	0.45kgf

SERIES 795 TELESCOPING INSPECTION MIRROR

- Used to cheak hidden areas
- The head can be rotated: 360°
- Length of handle is adjustable
- Handle is made of stainless steel

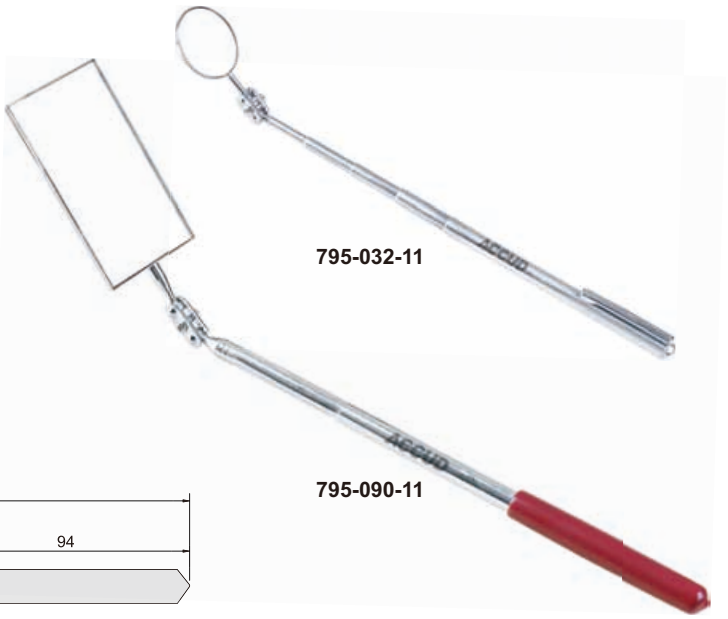

unit: mm

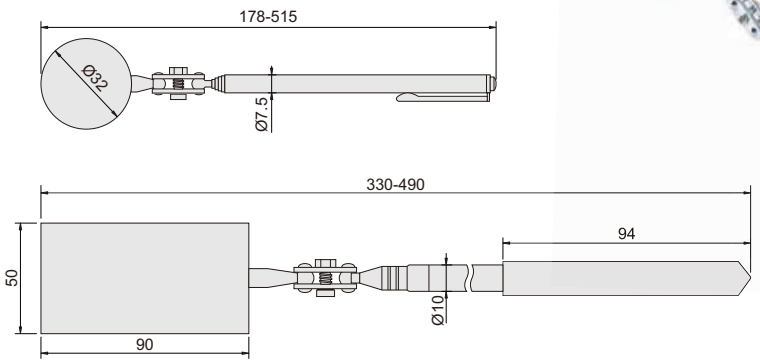

Code	Shape of mirror	Size of mirror	Length
795-032-11	circle	Ø32mm	178-515mm
795-090-11	rectangle	50x90mm	330-490mm

796 TELESCOPING INSPECTION MIRROR WITH LED

CR2032

- Used to cheak hidden areas
- The head can be rotated: 360°
- Length of handle is adjustable
- Handle is made of stainless steel



unit: mm

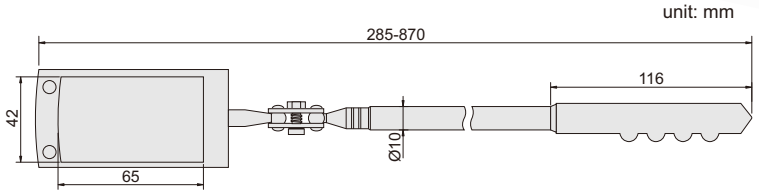

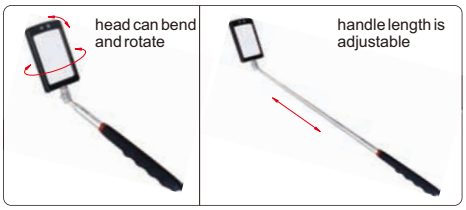

Code	Size of mirror	Length
796-065-11	65x42mm	285-870mm

DMN32 DIGITAL MAGNIFIER

Charge

VIDEO

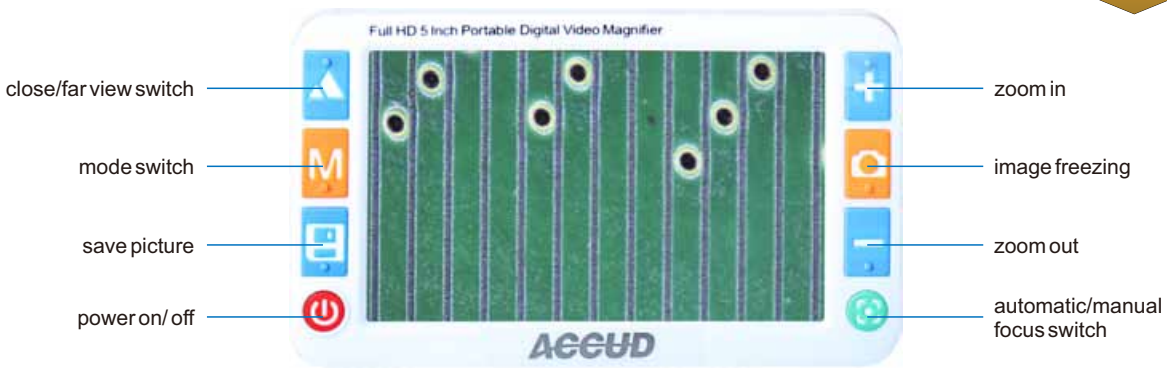

- Two cameras, for close and far view
- Double lens, autofocus
- 26 color modes can be switched
- With folding bracket
- With voice instructions when press the button
- With LED light
- Automatic power off after 3 minutes

SPECIFICATION

Screen size	5 inch
Screen resolution	800x480
Magnification	2X-32X
Close view pixel	8M
Far view pixel	8M
Focus	manual/automatic
Color mode(26 modes)	color mode, color enhancement mode, negative mode, monochrome mode, black on white, white on black, blue on white, white on blue, yellow on black, black on yellow, yellow on blue, blue on yellow, green on white, white on green, orange on white, white on orange, red on black, black on red,orange on black, black on orange, yellow on green, green on yellow, red on white, white on red, yellow on white, white on yellow
Line	horizontal and vertical red lines
Function	image freezing, image moving, photo review and high definition storage
Output	TV and HDMI
Storage	supports up to 32G TF card
Recharging port	Type-C
Power supply	rechargeable lithium battery, 2500mAH (for 4 hours working)
Dimension (LxWxH)	145x30x85mm
Weight	275g

INCLUDED ACCESSORIES

Main unit	1pc
HDMI cable	1pc
Video output cable	1pc
USB recharging cable	1pc
AC/DC adapter	1pc

DM200 DIGITAL MICROSCOPE

- Magnification: 10X-200X
- Pixel: 2M
- Interface: USB2.0
- Snap pictures and record videos
- 8 pcs adjustable LED lights
- With measuring software and calibration rule

VIDEO



Optional Stand



Universal Stand (MS36B)

Magnification, View Field and Focus Relationship

Magnification	Focus	View field
50X	21mm	9.5x7.1mm
100X	13mm	4.8x3.6mm
150X	16mm	3.2x2.4mm
200X	19mm	2.4x1.8mm

WIFI200 DIGITAL WIFI MICROSCOPE

WIFI

- Magnification: 10X-200X
- Pixel: 2M
- Interface: USB2.0 or WiFi
- Snap pictures and record videos
- 8 pcs adjustable LED lights
- With measuring software and calibration rule

VIDEO



It can connected to smart phone , Ipad or computer via WIFI

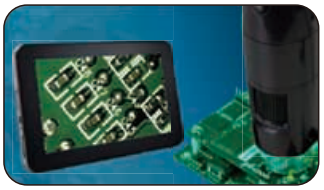

Optional Stand



Universal Stand (MS36B)

Magnification, View Field and Focus Relationship

Magnification	Focus	View field
50X	21mm	9.5x7.1mm
100X	13mm	4.8x3.6mm
150X	16mm	3.2x2.4mm
200X	19mm	2.4x1.8mm

PM100 PORTABLE MEASURING MICROSCOPE

AAA

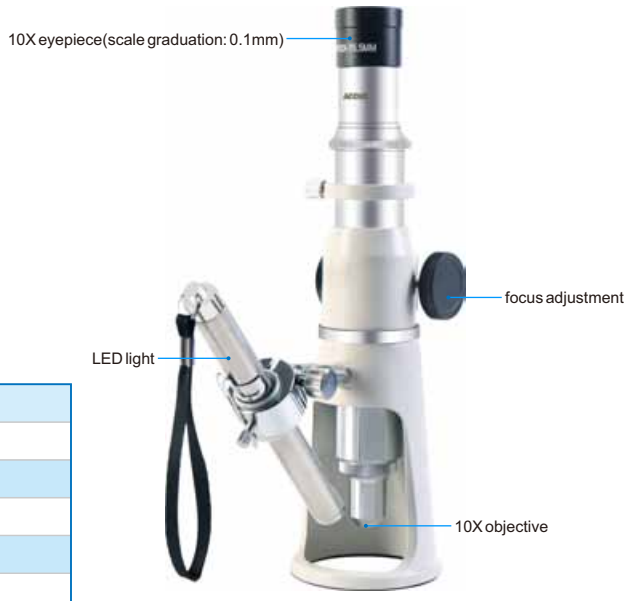

SPECIFICATION

Total magnification	100X
Eyepiece	10X
Objective(achromatic)	10X
Working distance	7mm
Focus range	30mm
Viewing field	Ø1.8mm
Graduation	0.01mm
Illumination	LED light
Diameter of base	Ø63mm
Height	210mm
Weight	650g

INCLUDED ACCESSORIES

Main unit	1pc
Pen light	1pc
Battery (AAA)	2pcs

DVM3DMS 3D MANUAL ROTATION MICROSCOPE (WITH DISPLAY)

- With adjustable LED light
- Automatic exposure, white balance
- With measuring functions

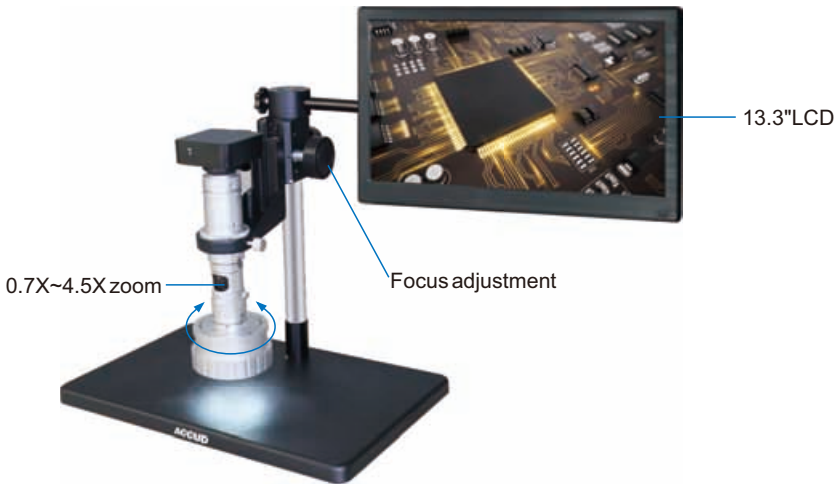

SPECIFICATION

Lens magnification	0.7X~4.5X
Total magnification	18X~120X
View field	2.4x1.5mm~16x9mm
Focus distance	20mm
View angle	45°
Sensor	1/2.8"CMOS
Pixel	2M
Resolution	1920x1080
Frame rate	60fps
Output	HDMI
Power supply	100-220V
Dimension (LxWxH)	570x300x430mm
Weight	10kg

INCLUDED ACCESSORIES

Main unit	1pc
X-Y metal stage	1pc
32G USB flash disk	1pc
Mouse	1pc
Power adapter	1pc

SERIES DVM3D 3D MOTORIZED ROTATION MICROSCOPE

- 1080P HD image
- High frame rate, without any delay in quick movement
- Automatic exposure, white balance
- With taking photos functions



DVM3DS

SPECIFICATION

Code		DVM3D	DVM3DS
Display		without	with 21.5" HD monitor
Total magnification		25X~150X	
Direction/rotation adjustment		by controller	
Max.view field		16mmx9mm	
Working distance		20mm	
Camera	Pixel	2M	
	Resolution	1920x1080	
	Frame rate	60fps	
Frame rate		LED adjustable light (adjusted by controller)	
Base size		380mmx260mm(LxW)	
Weight		5.7kg	

INCLUDED ACCESSORIES

Main unit	1pc
Stand	1pc
Controller	1pc
AC/DC adapter	1pc
USB flash disk	1pc

OPTIONAL ACCESSORIES

X-Y stage(range: 76x65mm)	DVM-STAGE

DVM1000 VIDEO MICROSCOPE

- High resolution color camera
- With TF card, can save pictures and videos
- High frame rate, without any delay in quick movement
- With crosshair on the screen

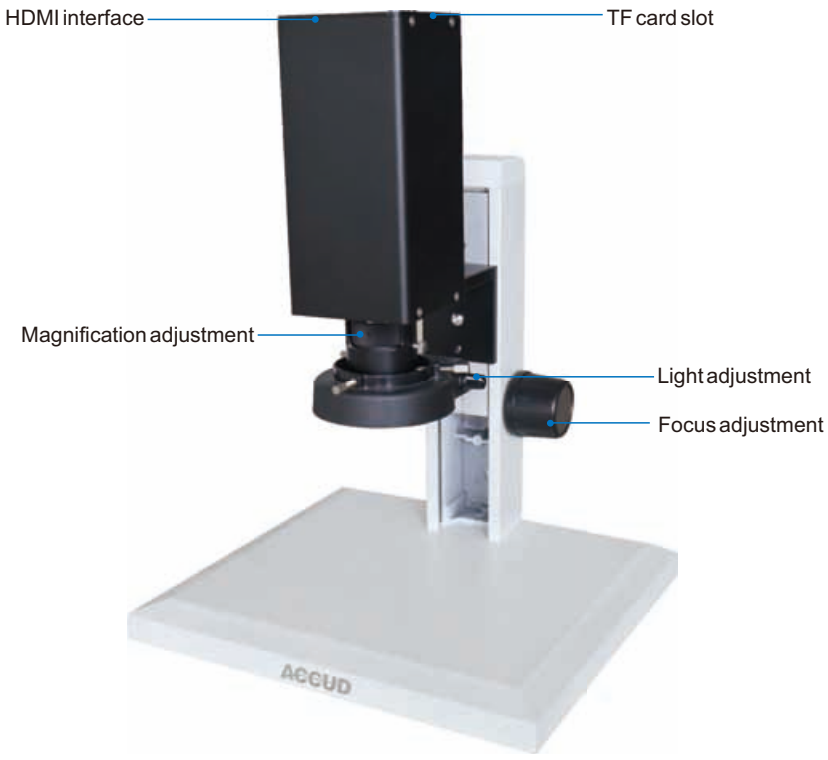

SPECIFICATION

Objective		0.7X ~ 5X (zoom)
Total magnification(with 22 inch monitor)		25X-180X
View field		3.2mm-23mm
Working distance		105mm
Camera	**Resolution**	1920x1080
	Pixel size	2.75*2.75μm
	Frame rate	60fps
Illumination		adjustable light
Base size		320mmx285mm(LxW)
Weight		6kg

INCLUDED ACCESSORIES

Main unit	1pc
Wireless mouse	1pc
HDMI connection cable	1pc
Ø95mm black/white plastic plate	1pc
8G TF card	1pc
TF card reader	1pc
AC/DC adapter	1pc

SERIES DVM2000 HD VIDEO MICROSCOPE

VIDEO

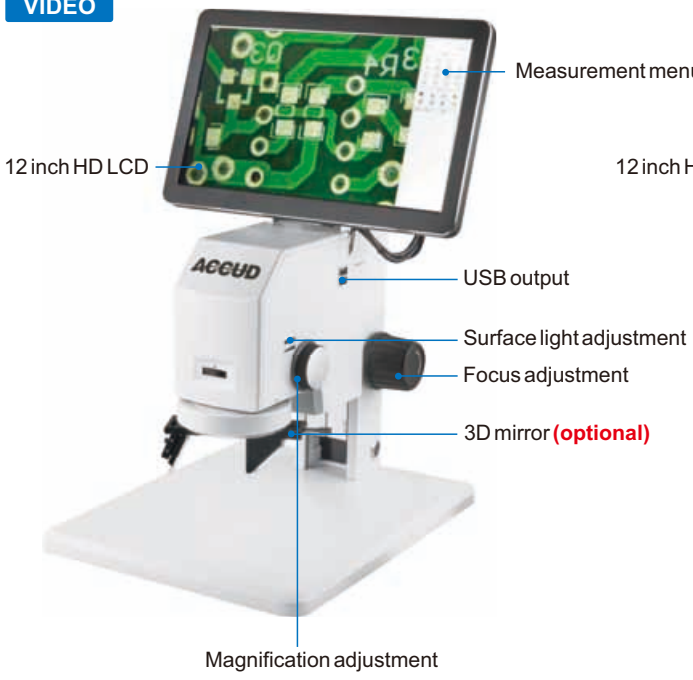

DVM2000

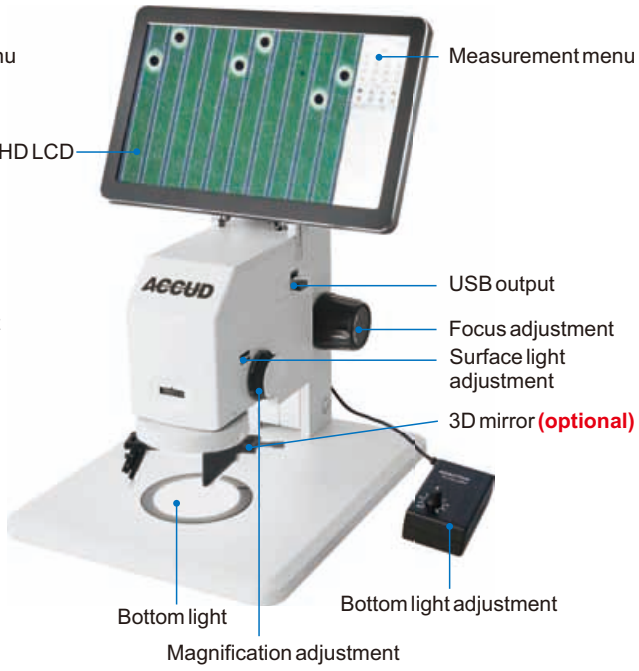

DVM2000B

- 12 inch wide screen HD LCD is included
- Can take pictures and record videos
- With USB interface, for transferring pictures or measuring data
- High frame rate, without any delay in quick movement
- With measuring function

Extension block
(code: DVM2000-EX)



SPECIFICATION

Code		DVM2000	DVM2000B
Bottom light		without	with
Objective		0.7X ~ 5X (zoom, fixed at 0.7X, 1X, 1.5X, 2X, 2.5X, 3X, 4X,5X)	
Total magnification		13X-97X	
View field		3mm-22.7mm	
Working distance		96mm	
Camera	Pixel	2M HDMI	
	Pixel size	2.75*2.75μm	
	Frame rate	60fps	
Illumination		144pcs LEDs adjustable light (surface light)	
LCD display		12 inch HD LCD display, 1080P	
Base size		260mmx320mm(LxW)	
Weight		5.5kg	

INCLUDED ACCESSORIES

Main unit	1pc
12 inch HD LCD	1pc
Wireless mouse	1pc
HDMI connection cable	1pc
Calibration rule	1pc
AC/DC adapter	1pc

OPTIONAL ACCESSORIES

0.5X Objective *	DVM2000-05-O
2X Objective	DVM2000-20-O
3D mirror	DVM2000-3D
Extension block	DVM2000-EX

* Should be bought with extension block

DVM3000 VIDEO MICROSCOPE

- 10.6 inch HD LCD is included
- Can take pictures and record videos
- High frame rate, without any delay in quick movement
- Automatic exposure, white balance



SPECIFICATION

Objective		0.7X ~ 4.5X
Total magnification		14X~100X
Max.view field		16.2mmx9.2mm
Working distance		88mm
	Pixel	1.2M
Camera	**Resolution**	1366x768
	Frame rate	60fps
Illumination		top/side LED adjustable light
LCD display		10.6 inch HD LCD display, 1080P
Base size		260mmx320mm(LxW)
Weight		5.7kg

INCLUDED ACCESSORIES

Main unit	1pc
Stand	1pc
Glass rule	1pc
AC/DC adapter	1pc
SD card	1pc

DVM100 VIDEO MICROSCOPE

- Basic type
- Can take pictures and record videos
- High frame rate, without any delay in quick movement
- Automatic exposure, white balance

VIDEO



SPECIFICATION

Objective		0.7X ~ 4.5X
Total magnification		12X~80X
Max.view field		16.2mmx9.2mm
Working distance		95mm
Camera	**Pixel**	2M
	Resolution	1920x1080
	Frame rate	30fps
Illumination		LED adjustable light
LCD display		9 inch IPS display, 1080P
Base size		230mmx150mm(LxW)
Weight		3.5kg

INCLUDED ACCESSORIES

Main unit	1pc
Stand	1pc
Glass rule	1pc
AC/DC adapter	1pc
TF card	1pc

SERIES DVM4000 AUTO FOCUS VIDEO MICROSCOPE

- Auto focus
- High frame rate, without any delay in quick movement
- Automatic exposure, white balance
- With measuring functions



DVM4000S

SPECIFICATION

Code		DVM4000	DVM4000S
Display		without	with 21.5" HD monitor
Objective		0.7X~4.5X	
Total magnification		26.5X~170X	
Max.view field		19mmx10.8mm	
Working distance		100mm	
Camera	Pixel	2M	
	Resolution	1920x1080	
	Frame rate	60fps	
Illumination		LED adjustable light	
Base size		380mmx260mm(LxW)	
Weight		5.7kg	

INCLUDED ACCESSORIES

Main unit	1pc
Stand	1pc
Calibration rule	1pc
AC/DC adapter	1pc
U-disk	1pc
Mouse	1pc

OPTIONAL ACCESSORIES

X-Y stage(range: 76x65mm)	DVM-STAGE
0.5X objective	DVM-05-O
2X objective	DVM-20-O

CTM450 DUAL-DISPLAY CUTTING TOOLS MICROSCOPE

- Granite base
- 27" dual monitor(optional), 4K high-definition image
- With cross line
- Measure point, line, circle, parallel lines, angle, etc
- Take pictures and videos, saved to USB flash disk

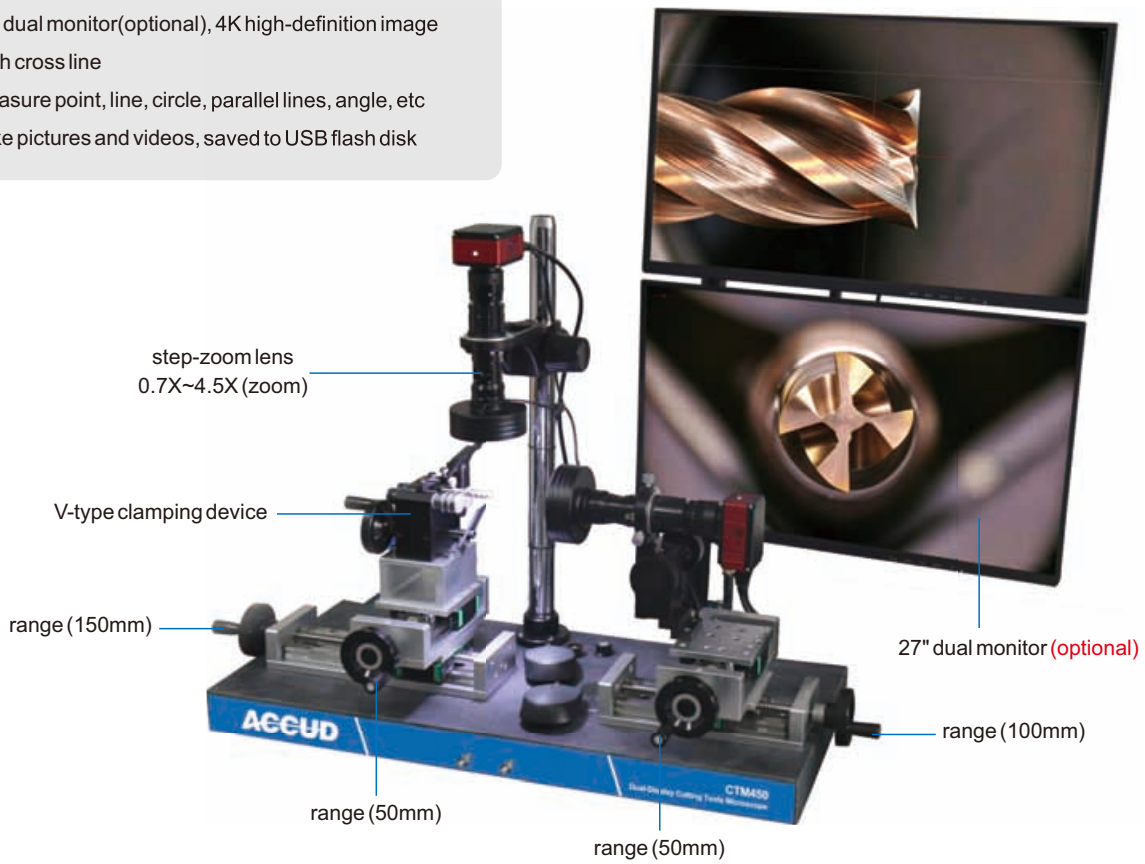

SPECIFICATION

Cutting tools range	Ø3~20mm, length 20~60mm
Lens	step-zoom lens (0.7X~4.5X)
Resolution	3840x2160
View field	2.5-16mm (diagonal)
Focus distance	90mm
Magnification	26.5X-170X (on 27" monitor)
Measuring accurary	±0.02mm
Output	HDMI/USB
Power supply	100~240V,50/60Hz
Base dimension (LxWxH)	450x350x50mm
Net Weight	35kg

INCLUDED ACCESSORIES

Main unit	1pc
Mouse	2pcs
Glass calibration block	1pc

OPTIONAL ACCESSORIES

4K monitor (Dell, 1pair)	**CTM450-LCD**
0.5X objective	**VM-OB05X**
2X objective	**VM-OB2X**

SERIES ZS1045 ZOOM STEREO MICROSCOPE

- Trinocular head is used to connect to camera



ZS1045

SPECIFICATION

Code	ZS1045	ZS1045T
Optical	binocular	trinocular
Magnification	10X~45X	
Eyepiece	10X (viwe field: Ø20mm)	
Objective	1X~4.5X (zoom)	
Pupil distance	55~75mm	
Diopter adjustment	±5 diopter	
Working distance	97mm	
Illumination	selectable incident and transmitted LED light	
Dimension(L×W×H)	310×250×420mm	
Weight	6kg	

INCLUDED ACCESSORIES

Main unit	1pc
10X eyepiece	1pair
Eyepiece patch	1pair
Ø95mm frosted glass plate	1pc
Ø42mm frosted glass plate	1pc
Ø95mm black/white plastic plate	1pc
Dustproof cover	1pc

OPTIONAL ACCESSORIES

0.5X Objective	ZS1045-05-O
0.75X Objective	ZS1045-75-O
2X Objective	ZS1045-02-O
10X Eyepiece with scale	ZS1045-10-FE
WF15X Eyepiece	ZS1045-15-E
WF20X Eyepiece	ZS1045-20-E
Camera	1300KPA

SERIES ZS0850 ZOOM STEREO MICROSCOPE

- Trinocular head is used to connect to camera



ZS0850T

SPECIFICATION

Code	ZS0850	ZS0850T
Optical	binocular	trinocular
Eyepiece	10X (view field: Ø22mm)	
Objective	0.8X ~ 5X (zoom)	
Zoom ratio	1:6.3	
Pupil distance	55 ~ 75mm(adjustable)	
Diopter adjustment	±5 diopter(two eyepieces)	
Working distance	115mm	
Max.workpiece height	75mm	
Illumination	selectable incident and transmitted LED light	
Poewr	110/220V, 50/60HZ	
Dimension(L×W×H)	290×260×480mm	
Weight	4.9kg	

INCLUDED ACCESSORIES

Main unit	1pc
10X eyepiece	2pcs
Ø100mm frosted glass plate	1pc
Ø100mm black/white plastic plate	1pc
Dustproof cover	1pc

OPTIONAL ACCESSORIES

0.5X Objective	ZS1045-05-O
2X Objective	ZS1045-02-O
10X Eyepiece with scale	ZS1045-10-FE
WF15X Eyepiece	ZS1045-15-E
WF20X Eyepiece	ZS1045-20-E
Camera	1300KPA

MM1000A METALLURGICAL MICROSCOPE

- For high magnification observation and metallurgical image analysis
- Infinite optical system, can add accessories like polarizer, analyzer into optical path without image quality influence



(camera is optional)

Filter



SPECIFICATION

Eyepiece(wide field)	10X(view field: Ø22mm)			
Objective(plan achromatic)	10X	20X	50X	100X(dry type)
Numerical aperture	0.25	0.40	0.70	0.85
Working distance	5mm	8.8mm	3.68mm	0.4mm
Stage	double layer			
	size: 242×200mm			
	travel: 30×30mm			
Pupil distance	53-75mm(adjustable)			
Diopter adjustment	±5 diopter(one eyepiece)			
Illumination	6V/30W halogen lamp, brightness is adjustable with polarizer and analyzer, built-in green, yellow, blue filters and frosted glass			
Weight	11kg			

INCLUDED ACCESSORIES

Main unit	1pc
Anti-dust cover	1pc
Filter	1set
Camera adapter(1X)	1pc

OPTIONAL ACCESSORIES

10X dividing eyepiece(0.1mm/div.)	**MM-EP10D**
Digital camera	**1300KPA**
5X Objective	**MM-OB5**

40X Objective	**MM-OB40**
60X Objective	**MM-OB60**
80X Objective	**MM-OB80**

SERIES PP PROFILE PROJECTOR

Certificate

- Large screen of the read out
- With manufacturer inspection certificate

VIDEO



PP3015

OPTIONAL ACCESSORIES



20X, 50X, 100X
lens with half-reflection mirror



rotary table
(glass diameter 100mm, graduation 2°)



5X magnifier

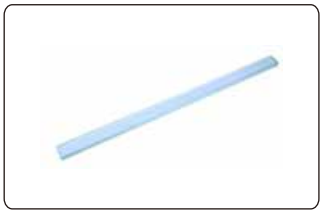

Series 552 glass scale

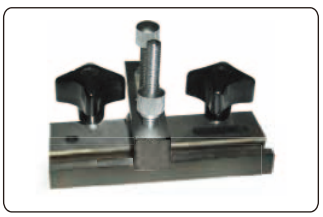

holder with clamp



swivel center support



V-block with clamp



Overlay chart

SPECIFICATION

Code	PP3015	PP3020
X-Y stage travel	150×50mm	200×100mm
Metal stage size	340×152mm	400×225mm
Glass stage size	195×95mm	245×145mm
Screen diameter	diameter: Ø300mm	
Image	inverted	
Linear scale resolution	1μm	
Accuracy	(4+L/25)μm L is the measuring length in mm	
Z(focus) travel range	80mm	
Max. load capacity	4kg	
Rotation scale	range: 0°~360°, resolution: 1' or 0.01°, accuracy: 6'	
Magnification accuracy	±0.1%	
Illumination	contour illumination: 12V/100W halogen lamp, 2-step(high/low) brightness adjustment	
	surface illumination: 24V/150W halogen lamp	
Readout display	X-Y stage travel, screen rotation	
Output	RS232 and USB	
Readout functions	 measure coordinate of point  measure coordinate of line  measure center coordinate, radius of circle with three points  measure distance between two objects  measure angle with four points or two lines  coordinate transform	
Dimension (L×W×H)	480×780×1150mm	
Weight	135kg	

INCLUDED ACCESSORIES

Main unit	1pc
10X lens with half-reflection mirror	1pc
Overlay chart clip	4pcs
Level	1pc
Anti-dust cover	1pc

OPTIONAL ACCESSORIES

20X lens with half-reflection mirror	PP3000-LENS20X
50X lens with half-reflection mirror	PP3000-LENS50X
100X lens with half-reflection mirror	PP3000-LENS100X
Rotary table	PP3000-TABLE
5X magnifier	PP3000-MAGNIFIER
Holder with clamp	PP3000-HOLDER
Swivel center support	PP3000-SUPPORT
V-block with clamp	PP3000-VBLOCK
Calibration scale	Series 552
Overlay chart	PP3015-CHART

PP3020W HORIZONTAL PROFILE PROJECTOR

Certificate

- With manufacturer inspection certificate



OPTIONAL ACCESSORIES



20X, 50X, 100X lens



Rotary table

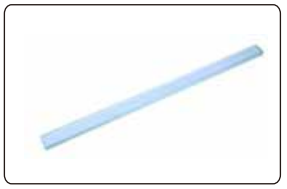

Series 552 glass scale



Series 636 V-block



Series 652 Vise



Overlay chart

PP3020W HORIZONTAL PROFILE PROJECTOR

SPECIFICATION

X-Y stage travel	200×100mm
Metal stage size	400×150mm
Screen diameter	Ø300mm
Linear scale resolution	1μm
Accuracy	(4+L/25)μm L is the measuring length in mm
Focus travel range	75mm
Focus	77.7mm(10X lens)
Max. load capacity	50kg
Workpiece rotation range	±15°
Rotation scale	range: 0°~360°, resolution: 1' or 0.01°, accuracy: 6'
Magnification accuracy	±0.08%
Illumination	contour illumination:24V/150W halogen lamp, brightness is adjustable
	surface illumination: 12V/150W halogen lamp, brightness is adjustable
Readout display	X-Y stage travel, screen rotation
Output	RS232 and USB
Data processing unit	 measure coordinate of point  measure coordinate of line  measure center coordinate, radius of circle with three points  measure distance between two objects  measure angle with four points or two lines  coordinate transform
Dimension(L×W×H)	1090×830×1010mm
Weight	160kg

INCLUDED ACCESSORIES

Main unit	1pc
10X lens	1pc
Overlay chart clip	4pcs
Foot-switch	1pc
Anti-dust cover	1pc

OPTIONAL ACCESSORIES

20X lens	**PP3020W-LENS20X**
50X lens	**PP3020W-LENS50X**
100X lens	**PP3020W-LENS100X**
Rotary table	**PP3020W-TABLE**
Overlay chart	**PP3015-CHART**
Vise	**Series 652**
V-block	**Series 636**
Glass scale	**Series 552**

PP4025W HORIZONTAL PROFILE PROJECTOR

Certificate

- With manufacturer inspection certificate



OPTIONAL ACCESSORIES



20X, 50X, 100X lens



Rotary table

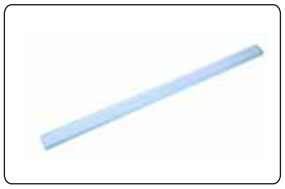

Series 552 glass scale



Series 636 V-block

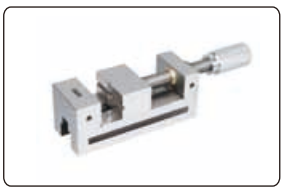

Series 652 Vise

PP4025W HORIZONTAL PROFILE PROJECTOR

SPECIFICATION

X-Y stage travel	250×150mm
Metal stage size	450×200mm
Screen diameter	Ø400mm
Linear scale resolution	0.5μm
Accuracy	(4+L/25)μm L is the measuring length in mm
Focus travel range	100mm
Focus	104mm(10X lens)
Max. load capacity	50kg
Workpiece rotation range	±15°
Rotation scale	range: 0°~360°, resolution: 1' or 0.01°, accuracy: 6'
Magnification accuracy	±0.08%
Illumination	contour illumination:24V/150W halogen lamp, brightness is adjustable
	surface illumination: 12V/150W halogen lamp, brightness is adjustable
Readout display	X-Y stage travel, screen rotation
Output	RS232 and USB
Data processing unit	measure coordinate of point measure coordinate of line measure center coordinate, radius of circle with three points measure distance between two objects measure angle with four points or two lines coordinate transform
Dimension(L×W×H)	646×1215×1210mm
Weight	240kg

INCLUDED ACCESSORIES

Main unit	1pc
10X lens	1pc
Overlay chart clip	4pcs
Foot-switch	1pc
Anti-dust cover	1pc

OPTIONAL ACCESSORIES

20X lens	**PP4025W-LENS20X**
50X lens	**PP4025W-LENS50X**
100X lens	**PP4025W-LENS100X**
Rotary table	**PP4025W-TABLE**
Vise	**Series 652**
V-block	**Series 636**
Glass scale	**Series 552**

PP6020 PROFILE PROJECTOR

Certificate

- With manufacturer inspection certificate



OPTIONAL ACCESSORIES



5X, 20X, 50X, 100X lens



Rotary table

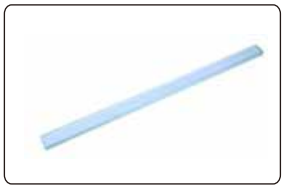

Series 552 glass scale

PP6020 PROFILE PROJECTOR

SPECIFICATION

X-Y stage travel		200×100mm				
Metal stage size		404×265mm				
Screen diameter		Ø600mm				
Linear scale resolution		1μm				
Accuracy		(4+L/25)μm L is the measuring length in mm				
Focus travel range		75mm				
Lens	**Magnification**	5X (Optional)	10X (Standard)	20X (Optional)	50X (Optional)	100X (Optional)
	View field	Ø120mm	Ø60mm	Ø30mm	Ø12mm	Ø6mm
	Focus	242.8mm	143.2mm	85.5mm	92mm	48.5mm
	Magnification accuracy	0.08%				
Max. load capacity		5kg				
Rotation scale		range: 0°~360°, resolution: 1' or 0.01°				
Illumination		contour illumination:24V/150W halogen lamp, brightness is adjustable				
		surface illumination: 12V/150W halogen lamp, brightness is adjustable				
Readout display		X-Y stage travel, screen rotation				
Output		RS232 and USB				
Data processing unit		 measure coordinate of point  measure coordinate of line  measure center coordinate, radius of circle with three points  measure distance between two objects  measure angle with four points or two lines  coordinate transform				
Dimension(L×W×H)		1200×1140×1940mm				
Weight		360kg				

INCLUDED ACCESSORIES

Main unit	1pc
10X lens	1pc
Overlay chart clip	4pcs
Foot-switch	1pc
Anti-dust cover	1pc

OPTIONAL ACCESSORIES

5X lens	**PP6020-LENS5X**
20X lens	**PP6020-LENS20X**
50X lens	**PP6020-LENS50X**
100X lens	**PP6020-LENS100X**
Rotary table	**PP6020-TABLE**
Glass scale	**Series 552**

SERIES QVM QUICK MEASUREMENT VISION MACHINE

- With double telecentric lens

VIDEO



QVM1010

SPECIFICATION

Code				QVM1010	QVM2020	QVM3020
Measurement	Measuring range	High precision (X*Y axis)		26x18mm	126x117mm	226x117mm
		Wide field of view (X*Y axis)		Ø100mm	200x200mm	300x200mm
	Lens field of view(mm)	High precision		26x18		
		Wide field of view		Ø100		
	Repeatability(μm)	High precision		±0.5		
		Wide field of view		±1		
	Accuracy*(μm)	High precision	Connectionless	±2		
			Connected	/	±(2+L/50)	
		Wide fieldof view	Connectionless	±4		
			Connected	/	±(4+L/50)	
Optical system	Camera			1" 20MP black-white CMOS camera x2		
	Lens			Dual-magnification double-sided telecentric lens		
	Surface light			Elevated quadrant white annular light source + green interstitial light source		
	Contour light			Green parallel bottom light source		
	Coaxial light			Built-in coaxial light source(optional)		
Max. working stage load				5kg		
Power supply				100-240V		
Working environment				Temperature: 0-40°; Humidity: 30-80%(no condensation); Vibration: <0.002g 15Hz		
Minimum display unit(μm)				0.1		
Dimension(L×W×H)				625x309x650mm	625x402x650mm	625x510x650mm
Weight				33kg	45kg	50kg

* Working tememperature is 20±1°C

INCLUDED ACCESSORIES

Main unit	1pc
Computer with measuring software	1pc
Calibration block	1pc
AC/DC adapter	1pc

SERIES MTM TOOLMAKER VISION MACHINE

Certificate

- With counter and measuring software
- With manufacturer inspection certificate



MTM400

SPECIFICATION

Code	MTM200	MTM300	MTM400
Measuring range(X/Y axis)	200×100mm	300×200mm	400×300mm
Z axis travel with scale	150mm, with fine adjustment		
Stage moving method	manual		
Linear scale resolution (X/Y/Z axis)	0.5μm		
Accuracy (X/Y axis)	(3+L/150)μm L is measuring length , unit:mm		
Repeatability	1μm		
Objective magnification	5X/10X/20X/50X		
Eyepiece magnification	10X		
Focus	5X:10.8mm/10X:12.2mm/20X:4mm/50X:7.8mm		
Camera	Color CCD, 5M pixel		
Illumination	contour illumination: LED, brightness adjustment		
	surface illumination: coaxial LED, brightness adjustment		
Max. glass stage loading	20kg	20kg	20kg
Dimension (L×W×H)	650×750×800mm	750×850×800mm	800×900×800mm
Weight	165kg	200kg	235kg

INCLUDED ACCESSORIES

Main unit	1pc
Calibration block	1pc
Software with USB dongle	1pc(same as series VM)
Controller	1pc
Objective	4pcs
Eyepiece	1pair

OPTIONAL ACCESSORIES

Computer	VM-PC

TVM200 CUTTING TOOLS VISION MACHINE

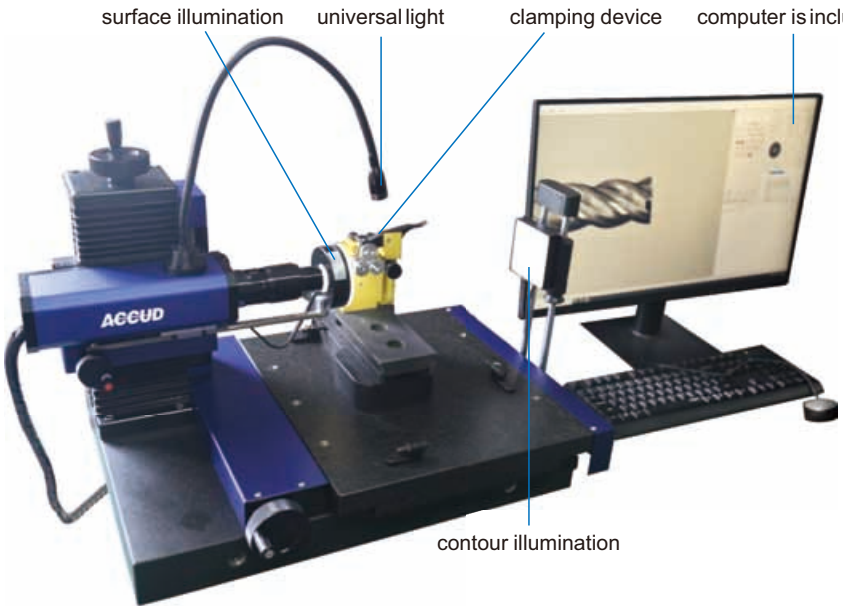

- Granite base
- Equipped with a high-definition color digital camera, the system can inspect various geometric dimensions of cutting tools to improve measurement accuracy
- The dedicated tool measurement software supports measurement of rake angle, clearance angle, helix angle and tooth gap angle for milling cutters, form milling cutters, drills and taps
- It is also capable of inspecting a wide range of cutters including radius end mills and ball nose end mills
- Featuring built-in profile tracking and scanning functions, the software enables dimension comparison against defined profiles
- Data can be save as Word, Excel, JPG and DXF file

Concentric clamp (included)



V-concentric clamp (optional)



SPECIFICATION

Range (X/Y)	200x90mm
Z axis range	70mm
Clamping diameter	3-20 mm(ejector pin with adjustable stroke of 20 mm)
Resolution of X/Y axis	1μm
Accuracy of X/Y axis	5μm
Repeatability of X/Y axis	2μm
Objective	0-58X~8X (zoom)
View field (diagonal length)	2.0~29mm
Working distance	68mm
Magnification	20X~400X (with optional objective on 27" monitor)
Camera	color CCD, 5M pixel
Illumination	surface and contour with adjustable LED, with universal light
Drive method	manual
Power supply	110~220V, 50/60Hz
Dimension (LxWxH)	800x400x500mm
Weight	60kg

INCLUDED ACCESSORIES

Main unit	1pc
Computer with 4K monitor (Dell, 27")	1pc
Software with dongle	1set
Concentric clamp	1pc

OPTIONAL ACCESSORIES

V-concentric clamp	**TVM200-V BLOCK**
BT50 clamp	**TVM200-BT50**
BT40 clamp	**TVM200-BT40**
HSK63A clamp	**TVM200-HSK63A**

SERIES VM VISION MACHINE

Certificate

- Granite base and column
- With manufacturer inspection certificate

VIDEO



VM5040

SPECIFICATION

Code	Motorized focus	VM2010M	VM3020M	VM4030M	VM5040M
	Manual focus	VM2010	VM3020	VM4030	VM5040
Measuring range(X/Y axis)		200×100mm	300×200mm	400×300mm	500×400mm
Z axis travel with scale		200mm*			
Stage moving method		manual			
Linear scale resolution (X/Y/Z axis)		1μm			
Accuracy (X/Y axis)		(3+L/200)μm L is the measuring length in mm			
Repeatability		2μm			
Focus		90mm			
Lens magnification		0.7X-4.5X			
Total magnification		30-220X			
Camera		Color CCD, 1.3M pixel			
Illumination		contour illumination: LED, brightness adjustment			
		surface illumination: LED, brightness adjustment			
Max. glass stage loading		20kg	20kg	20kg	30kg
Dimension (L×W×H)		580×680×880mm	770×650×1080mm	960×750×1080mm	1250×860×1690mm
Weight		140kg	188kg	230kg	450kg

* The Z axis travel are available upon request

INCLUDED ACCESSORIES

Main unit	1pc
Calibration block	1pc
Software with USB dongle	1pc
Controller	1pc
Operating table(only VM5040 and VM5040M included)	1pc

OPTIONAL ACCESSORIES

0.5X auxiliary objective	VM-OB05X
2X auxiliary objective	VM-OB2X
Computer	VM-PC
Coaxial light *	VM-CL
Operating table (except for VM5040 and VM5040M)	VM-Table
Calibration scale	Series 552

* Should be bought with main unit

SOFTWARE FOR ALL MANUAL VISION MACHINES

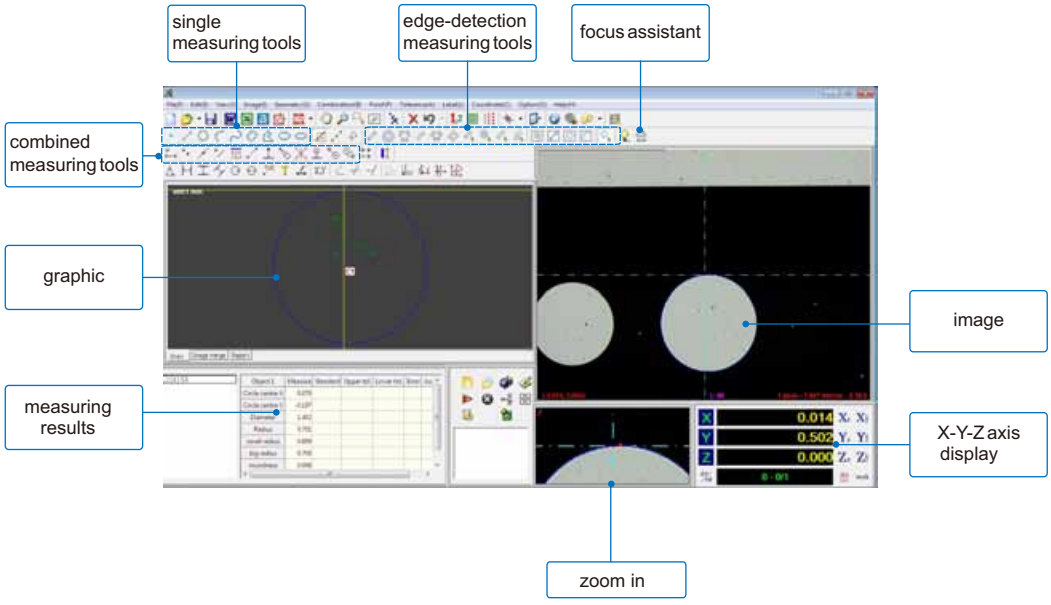

◆ **Single measuring tools:**

- measure coordinate of point
- measure length of line
- measure center coordinate, radius, diameter and area of circle
- measure length and diameter of arc
- measure length of curve
- measure width, length and area of rectangle
- measure length and area of polygon
- measure center coordinate, axis length and area of ellipse

◆ **Combined measuring tools:**

- measure distance between two objects like, two points, two lines, a point to a line, a point to a circle and so on.
- create a intersection point
- find midpoint of a line
- create a line
- create a line, a circle and a arc based on points
- measure distance between two points
- measure distance from point to line
- create tangent lines between point and circle
- create angular bisector between two lines
- measure distance from circle to line
- measure distance between two circles
- find tangent lines between two circles

SERIES VM AUTOMATIC VISION MACHINE

Certificate

VIDEO

- The stage can move automatically by programming
- The light can changed automatically by programming
- Automatic focus
- Granite stage and column
- With manufacturer inspection certificate



VM400CNC

MCP probe**(optional)**



0.5X auxiliary objective**(optional)**



2X auxiliary objective**(optional)**



SERIES VM AUTOMATIC VISION MACHINE

SPECIFICATION

Code	VM300CNC	VM400CNC	VM500CNC
Measuring range(X/Y axis)	300×200mm	400×300mm	500×400mm
Z axis travel with scale	200mm* (automatic)		
Stage moving method	automatic		
Linear scale resolution (X/Y/Z axis)	1μm		
Accuracy (X/Y axis)	(2.2+L/200)μm L is the measuring length in mm		
Repeatability	2μm		
Focus	90mm		
Lens magnification	0.7X-4.5X		
Total magnification	30-220X		
Camera	Color CCD, 2M pixel		
Illumination	contour illumination: LED, brightness adjustment		
	surface illumination: LED(8 sections), brightness adjustment		
Max. glass stage loading	20kg	20kg	25kg
Glass stage size	358mm×258mm	458×358mm	558×458mm
Weight	320kg	400kg	500kg

* The Z axis travel are available upon request

INCLUDED ACCESSORIES

Main unit	1pc
Calibration block	1pc
Software with USB dongle	1pc
Computer	1pc
Count card	1pc

OPTIONAL ACCESSORIES

0.5X auxiliary objective	VM-OB05X
2X auxiliary objective	VM-OB2X
Calibration scale	Series 552
MCP probe*	VM-MCP

* Should be bought with vision machine

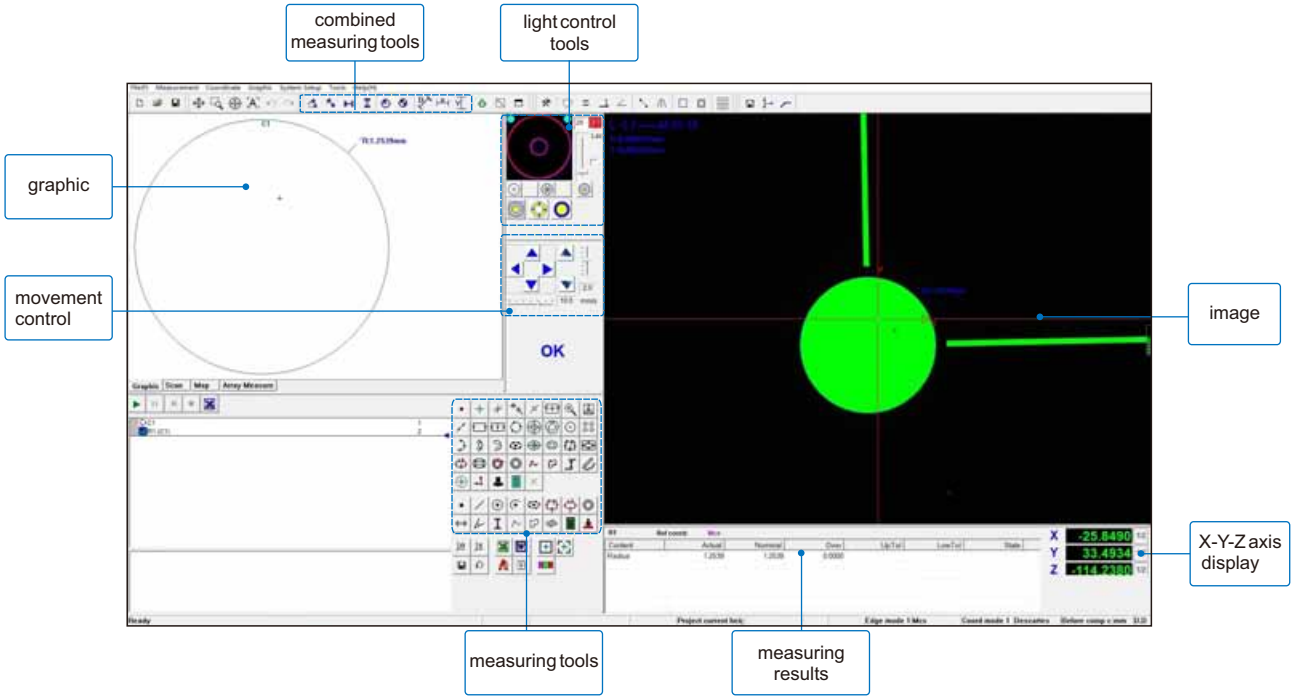

SERIES VM AUTOMATIC VISION MACHINE

- The stage is fixed, X/Y/Z Axis can move automatically by programming
- The light can changed automatically by programming
- Automatic focus
- Granite stage and column with good stability
- With manufacturer inspection certificate

Certificate

VIDEO



VM1000CNC

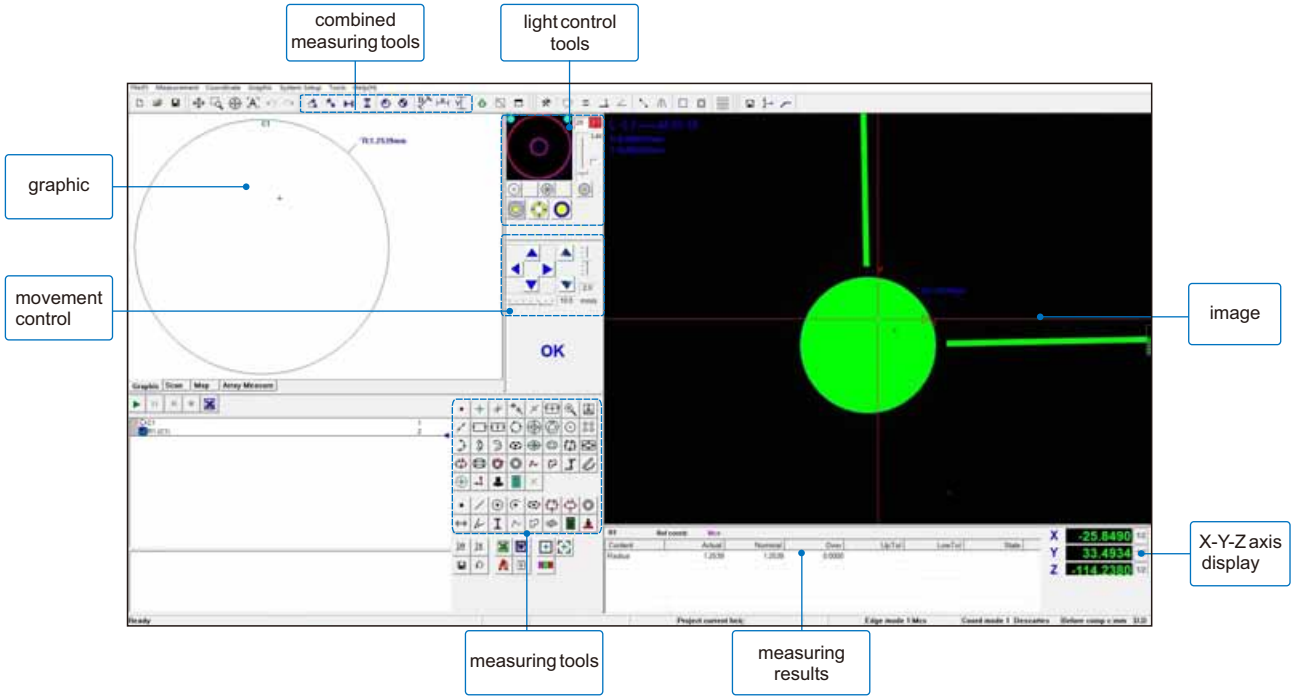

SERIES VM AUTOMATIC VISION MACHINE

SPECIFICATION

Code	VM600CNC	VM800CNC	VM1000CNC	VM1200CNC	VM1500CNC
Measuring range(Y/X axis)	600×500mm	840×620mm	1000×800mm	1200×1000mm	1500×1200mm
Z axis travel with scale	200mm(automatic)				
Stage moving method	automatic				
Linear scale resolution (X/Y/Z axis)	0.5μm				
Accuracy (X/Y axis)	(2+L/200)μm			(2.5+L/200)μm	(3.5+L/200)μm
	L is the measuring length in mm				
Repeatability	2μm				
Focus	90mm				
Lens magnification	0.7X-4.5X				
Total magnification	23-190X				
Camera	Color CCD, 2M pixel				
Illumination	contour illumination: coaxial light, brightness adjustment				
	surface illumination: LED(8 sections), brightness adjustment				
Max. glass stage loading	45kg	50kg	50kg	60kg	60kg
Glass stage size	755×678mm	995×798mm	1155×978mm	1218×1395mm	1378×1655mm
Weight	1050kg	1400kg	1600kg	1800kg	2100kg

INCLUDED ACCESSORIES

Main unit	1pc
Calibration block	1pc
Software with USB dongle	1pc
Computer	1pc
Count card	1pc

OPTIONAL ACCESSORIES

0.5X auxiliary objective	VM-OB05X
2X auxiliary objective	VM-OB2X
Calibration scale	Series 552
MCP probe*	VM-MCP

*Should be bought with vision machine

SERIES WE6800 DIGITAL READOUT

- Recalls the last position after power failure without power
- Can be connected with linear scale or encoder to carry out processing and measuring for various kinds of machines.

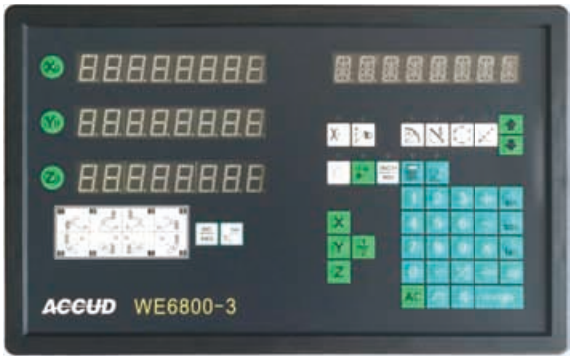

WE6800-3

SPECIFICATION

Code	WE6800-2	WE6800-3
Axis	2	3
RS232 output	Yes	No
Functions	set zero, numerical analysis, pre-sets value, absolute coordinate/relative coordinate, filters numerical value, metric units/imperial units conversion, diameter/semi-diameter conversion, shrinkage rate, find mechanical original point (RI), calculator, circular point hole, oblique line hole, arc processing, bevel processing, lathe	
Resolution	0.1, 0.2, 0.5, 1, 2, 5, 10μm	
Input signal	Orthogonality TTL square wave; frequency<2MHZ; electric current>1mA	
Input voltage	AC 90V~240V	
Dimension	296 x 184 x 45 mm	
Weight	1.5kg	

INCLUDED ACCESSORIES

Main unit	1pc
Mounting bracket	1pc
Ground cable	1pc



◆ Code explanation:

LS□-□
- range
- type

Example:

Code	Type	Range
LSA1-50	A1	50mm
LSB5-1000	B5	1000mm

Type A1

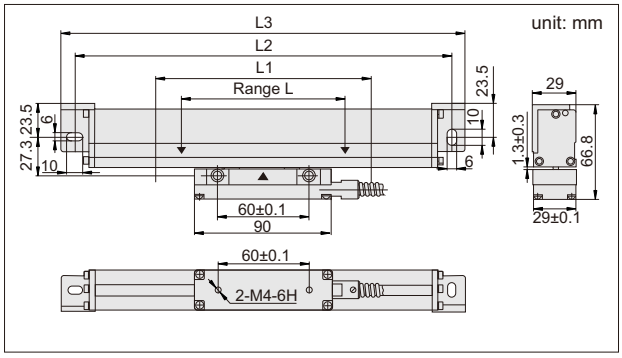

Type B5

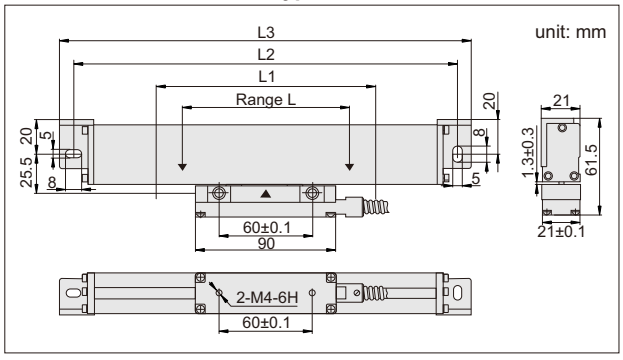

SPECIFICATION

Code	Series LSA1		Series LSB5	
Type	A1		B5	
Range	50-1000mm (step 50mm)		50-1000mm (step 50mm), 1000-3000mm(step 100mm)	
Max. travel length (L1)	L+30(L<950)	L+50(L≥950)	L+30(L<950)	L+50(L≥950)
Mounting hole pitch (L2)	L+132(L<950)	L+152(L≥950)	L+136(L<950)	L+156(L≥950)
Total length (L3)	L+149(L<950)	L+169(L≥950)	L+154(L<950)	L+174(L≥950)
Resolution	1μm		5μm	
Max. response speed	50m/min		60m/min	
Scale grating pitch	20μm			
Scale reference point pitch	50mm			
Accuracy	(5+5L/1000)μm L is the range in mm			
Cable length	3.5m (L: 50-950mm), 5m (L: 1000-1500mm), 10m (L: 1 600-3000mm)			

INCLUDED ACCESSORIES

Main unit	1pc
Shape support	1pc
Anti-dust cover	1pc
Plain base (for range >1500mm)	1pc
Mounting accessories	one package

1300KPA CAMERA

- Easy to connect computer by USB
- Supplied with measuring software



SPECIFICATION

Camera sensor	1/3" CMOS
Pixel	5 Mega
Interface	USB
Dimension (L×W×H)	65 × 48 × 43(mm)
Weight	400g



Connect with Vickers hardness tester



Connect with microscope

INCLUDED ACCESSORIES

Main unit	1pc
USB cable	1pc
Software	1pc

OPTIONAL ACCESSORIES

C-mount	**1300KPA-CM**
Calibration rule (graduation: 0.1mm)	**RU01**
Ø30mm eyepiece adaptor	**AD30**
Ø30.5mm eyepiece adaptor	**AD305**

SERIES 552 GLASS SCALE

Certificate

- For calibrating the accuracy of vision machine or profile projector
- Graduation:1mm
- With manufacturer inspection certificate

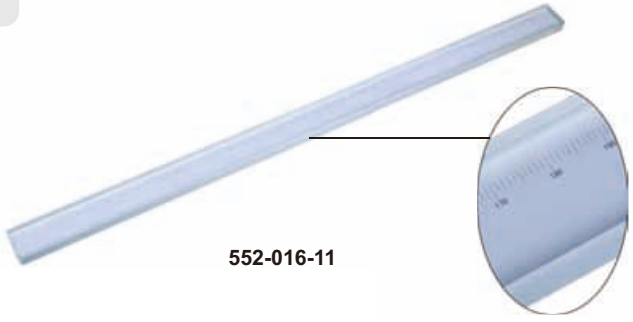

552-016-11

Code	Range (mm)	Accuracy (μm)	Thickness (mm)	Width (mm)
552-008-11	200	1.5	8	20
552-012-11	300	2	10	25
552-016-11	400	2	10	25
552-024-11	600	2.5	12	30

SERIES SCAN3D HANDHELD 3D SCANNER

- Three scanning modes to suit different situations
- AI algorithm module, greatly improve the scanning effect
- Highly efficient scanning with ultra-fast measuring speeds
- Metrology-grade measuring accuracy
- Optional photogrammetry function

VIDEO

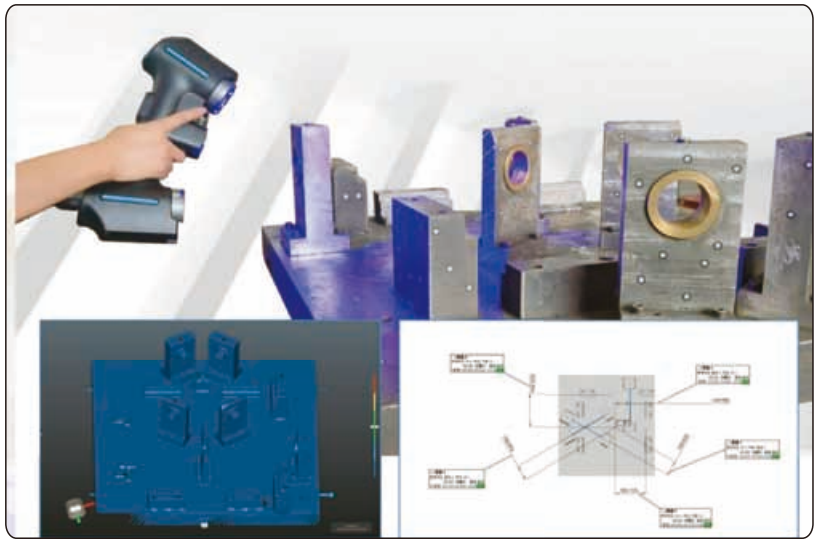



SCAN3D54

SPECIFICATION

Code		SCAN3D54	SCAN3DPRO
Scanning mode	hige-speed scanning	26 cross blue laser lines	50 cross blue laser lines
	precision scanning	7 parallel blue laser lines	
	deep hole scanning	1 blue laser line	
Maximum scanning speed		5,400,000 measurements/s	7,100,000 measurements/s
Volume accuracy		0.015mm+0.035mm/m (standard configuration) 0.015mm+0.025mm/m (required optional photogrammetric ruler)	
Laser class		CLASS II (eye-safe)	
Maximum resolution		0.01mm	
Depth of field		550mm	
Reference distance		300mm (hige-speed scanning, deep hole scanning), 200mm (precision scanning)	
Maximum scanning field		650mmx550mm	
Output format		stl, ply, txt, asc	
Operating temperature		-10°C~40°C	
Interface		USB3.0	
Power supply		100~240V,50/60Hz	
Dimension (LxWxH)		335x140x70mm	

INCLUDED ACCESSORIES

Main unit	1pc
Scanning software	1pc
R1.5mm mark	1000pcs
R3.0mm mark	4000pcs
Calibration plate	1pc

OPTIONAL ACCESSORIES

Photogrammetric ruler	SCAN3D-RULER

TP450 TOOL PRESETTER

Data output

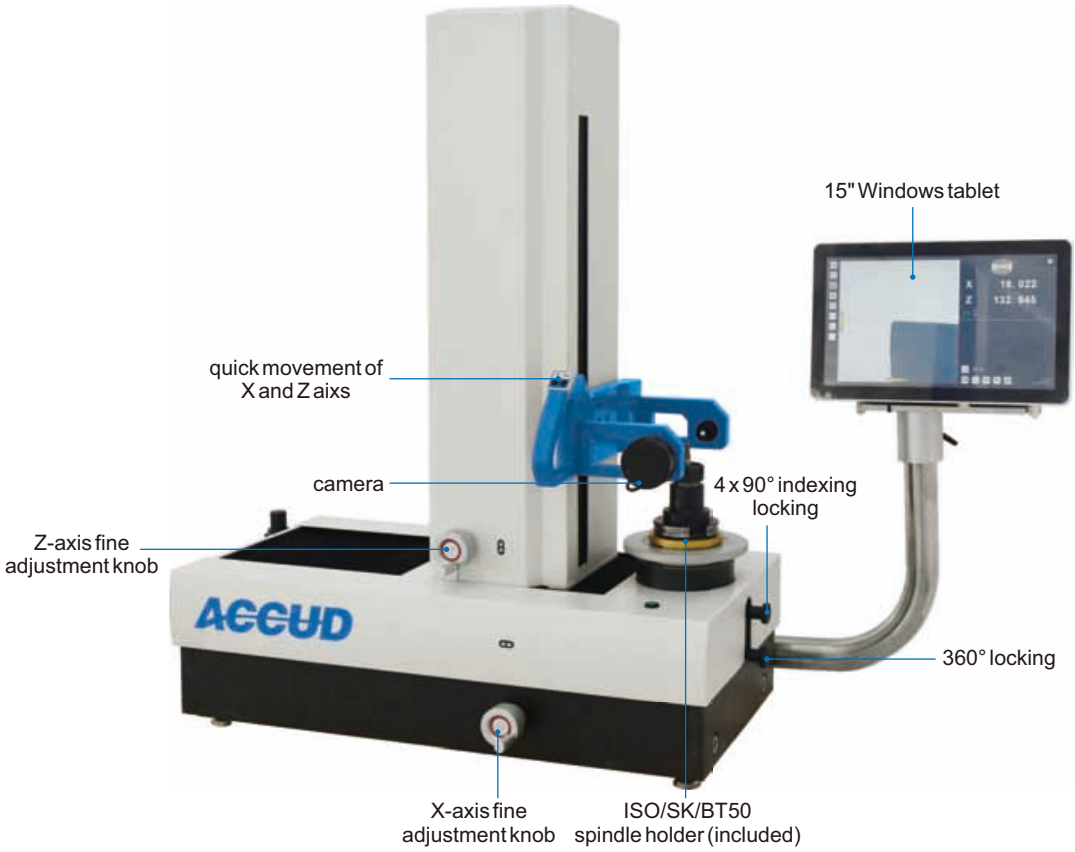

- Supplied with spindle vacuum clamping
- Check, preset and measure cutting tools
- CCD camera system with telecentric lens
- Touch screen, shortcut icons for easy operation
- Granite base, more stable
- Measuring lines, arcs, angles and other elements quickly
- Measuring images can be saved
- Measuring modes: absolute, relative and incremental measurement
- Measuring reports can be printed
- Supporting system scanning for direct retrieval and communication with tools machine
- Automatic cutting tools recognition by scanner

Converter **(optional)**



Printer (included)





Automatic Center Inspection



Automatic Radius Inspection



Automatic Angle Inspection



Automatic Circle Inspection

TP450 TOOL PRESETTER

SPECIFICATION

Max. tool diameter (X axis)		400mm
Max. tool height (Z axis)		500mm
Repeatability	X axis	2μm
	Z axis	2μm
Resolution of X/Z axis		1μm
Radial runout of spindle		≤2μm at 100mm, ≤5μm at 300mm
Camera		color CCD, 1.3M pixel
Magnification		26X
View field		6.5x6.5mm
Illumination		LED transmitted light source
Spindle		ISO/SK/BT50
Output		USB
Air pressure		0.4~0.6MPa
Environment requirement		temperature: 10~45°C, relative humidity: 30%~75%
Power supply		110/220V
Dimension (LxWxH)		860x590x1060mm
Weight		120kg

INCLUDED ACCESSORIES

Main unit	1pc
Tablet computer	1pc
ISO/SK/BT50 spindle	1pc
Anti-dust cover	1pc
Printer	1pc

OPTIONAL ACCESSORIES

ISO/SK/BT50 to ISO/SK/BT30 converter	TP450-BT50-30
ISO/SK/BT50 to ISO/SK/BT40 converter	TP450-BT50-40
ISO/SK/BT50 to HSK32 A/C/E, HSK40 B/D/F converter	TP450-BT50-HSK32
ISO/SK/BT50 to HSK40 A/C/E, HSK50 B/D/F converter	TP450-BT50-HSK40
ISO/SK/BT50 to HSK50 A/C/E, HSK63 B/D/F converter	TP450-BT50-HSK50
ISO/SK/BT50 to HSK63 A/C/E,HSK100 B/D/F converter	TP450-BT50-HSK63
Standard rod	TP450-ROD
Scanner	TP450-SCAN
Tool table	TP450-TABLE
Ring LED light	TP450-LED

HR150 MANUAL ROCKWELL HARDNESS TESTER

Certificate

- Manual loading control
- Economic type
- With manufacturer inspection certificate

VIDEO


Small flat anvil


Large flat anvil


V-type anvil



SPECIFICATION

Load force	10kgf (98N)
Total load force	60kgf (588N), 100kgf (980N), 150kgf (1471N)
Stage elevation	manual
Loading control	manual
Graduation	0.5HR
Max. test height	155mm
Max. throat	130mm
Dimension	460×180×620mm
Weight	65kg

INCLUDED ACCESSORIES

Main unit	1pc
Ø1.5875mm ball carbide indenter	1pc
Diamond indenter	1pc
Flat anvil	2pcs
V-type anvil	1pc
Rockwell test block	5pcs
Screw driver	2pcs

HR150B MANUAL ROCKWELL HARDNESS TESTER

Certificate

- Manual loading control
- With manufacturer inspection certificate


Small flat anvil


Large flat anvil


V-type anvil



SPECIFICATION

Load force	10kgf (98N)
Total load force	60kgf (588N), 100kgf (980N), 150kgf (1471N)
Stage elevation	manual
Loading control	manual
Graduation	1HR
Max. test height	170mm
Max. throat	160mm
Dimension	487×265×726mm
Weight	73kg

INCLUDED ACCESSORIES

Main unit	1pc
Ø1.5875mm ball carbide indenter	1pc
Diamond indenter	1pc
Flat anvil	2pcs
V-type anvil	1pc
Rockwell test block	3pcs
Dustproof cover	1pc

HR150A DIGITAL ROCKWELL HARDNESS TESTER

Certificate
Data output

- Manual loading control
- The hardness scale can be converted to HV and HB
- With USB interface, for transferring data
- With manufacturer inspection certificate

VIDEO




Small flat anvil


Large flat anvil


V-type anvil


PR100 printer **(optional)**

SPECIFICATION

Load force	10kgf (98N)
Total load force	60kgf (588N), 100kgf (980N), 150kgf (1471N)
Stage elevation	manual
Loading control	manual
Resolution	0.1HR
Max. test height	170mm
Max. throat	160mm
Dimension	487×265×726mm
Weight	73kg

INCLUDED ACCESSORIES

Main unit	1pc
Ø1.5875mm ball carbide indenter	1pc
Diamond indenter	1pc
Flat anvil	2pcs
V-type anvil	1pc
Rockwell test block	3pcs
Dustproof cover	1pc

OPTIONAL ACCESSORIES

Wireless printer	**PR100**

HR150C DIGITAL ROCKWELL HARDNESS TESTER

Certificate

Data output

- Motorized loading control
- The hardness scale can be converted to HV and HB
- With USB interface,for transferring data
- With manufacturer inspection certificate

VIDEO





Small flat anvil



Large flat anvil



V-type anvil



PR100 printer **(optional)**

SPECIFICATION

Load force	10kgf (98N)
Total load force	60kgf (588N), 100kgf (980N), 150kgf (1471N)
Stage elevation	manual
Loading control	auto
Loading time	1-99s
Resolution	0.1HR
Max. test height	170mm
Max. throat	160mm
Dimension	487×265×726mm
Weight	73kg

INCLUDED ACCESSORIES

Main unit	1pc
Ø1.5875mm ball carbide indenter	1pc
Diamond indenter	1pc
Flat anvil	2pcs
V-type anvil	1pc
Rockwell test block	3pcs
Dustproof cover	1pc

OPTIONAL ACCESSORIES

Wireless printer	**PR100**

HR150D MOTORIZED ROCKWELL HARDNESS TESTER

Certificate

- Motorized loading control
- Economic type
- With manufacturer inspection certificate


Small flat anvil


Large flat anvil


V-type anvil



SPECIFICATION

Load force	10kgf (98N)
Total load force	60kgf (588N), 100kgf (980N), 150kgf (1471N)
Stage elevation	manual
Loading control	auto
Loading time	1-99s
Resolution	0.5HR
Max. test height	200mm
Max. throat	130mm
Dimension	470×230×680mm
Weight	75kg

INCLUDED ACCESSORIES

Main unit	1pc
Ø1.5875mm ball carbide indenter	1pc
Diamond indenter	1pc
Flat anvil	2pcs
V-type anvil	1pc
Rockwell test block	5pcs

HR150CNC AUTOMATIC ROCKWELL/SUPERFICIAL ROCKWELL HARDNESS TESTER

Certificate

- The stage is fixed, and indenter moves up and down
- Motorized loading control
- High-precision closed loop force loading system
- The hardness scale can be converted to HV and HB
- With touch screen, easy to operate
- With wireless printer
- With manufacturer inspection certificate



SPECIFICATION

Type	Rockwell	Superficial Rockwell
Load force	10kgf (98N)	3kgf (29.4N)
Total load force	60kgf (588N), 100kgf (980N), 150kgf (1471N)	15kgf (147.1N), 30kgf (294.2N), 45kgf (441.3N)
Hardness scale	HRA, HRB, HRC, HRD, HRF, HRG	HR15N, HR30N, HR45N, HR15T, HR30T, HR45T,
Indenter elevation	auto	
Loading control	auto	
Loading time	1-60s	
Resolution	0.1HR	
Max. test height	280mm	
Max. throat	170mm	
Dimension	400×855×620mm	
Weight	80kg	

INCLUDED ACCESSORIES

Main unit	1pc
Ø1.5875mm ball carbide indenter	1pc
Diamond indenter	1pc
Small flat anvil	1pc
V-type anvil	1pc
HRA test block	1pc
HRB test block	1pc

HRC test block	3pcs
HR15N test block	1pc
HR30N test block	2pcs
HR45N test block	1pc
Ø1.5875mm ball	5pcs
Wireless printer	1pc

HRSS150A DIGITAL ROCKWELL HARDNESS TESTER

Motorized Loading | Certificate

- Motorized loading control
- High-precision closed loop force loading system
- The hardness scale can be converted to HV and HB
- With touch screen, easy to operate
- With printer
- With RS232 data output
- With manufacturer inspection certificate



Display




Small flat anvil


Large flat anvil


V-type anvil

SPECIFICATION

Type	Rockwell
Load force	10kgf (98N)
Total load force	60kgf (588N), 100kgf (980N), 150kgf (1471N)
Hardness scale	HRA, HRB, HRC, HRD, HRE, HRF, HRG, HRH, HRK, HRL, HRM, HRP, HRR, HRS, HRV
Stage elevation	manual
Loading control	auto
Loading time	1-60s
Resolution	0.1HR
Max. test height	200mm
Max. throat	200mm
Dimension	600×210×778mm
Weight	95kg

INCLUDED ACCESSORIES

Main unit	1pc
Ø1.5875mm ball carbide indenter	1pc
Diamond indenter	1pc
Small flat anvil	1pc
Large flat anvil	1pc

V-type anvil	1pc
HRA test block	1pc
HRB test block	1pc
HRC test block	3pcs
Dust cover	1pc

HRSS150C DIGITAL ROCKWELL/SUPERFICIAL ROCKWELL HARDNESS TESTER

Motorized Loading | Certificate

- Motorized loading control
- High-precision closed loop force loading system
- The hardness scale can be converted to HV and HB
- With touch screen, easy to operate
- With printer
- With manufacturer inspection certificate

VIDEO



Display

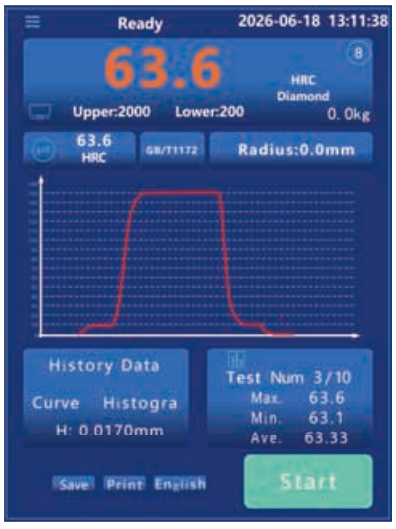

SPECIFICATION

Type	Rockwell	Superficial Rockwell
Load force	10kgf (98N)	3kgf (29.4N)
Total load force	60kgf (588N), 100kgf (980N), 150kgf (1471N)	15kgf (147.1N), 30kgf (294.2N), 45kgf (441.3N)
Hardness scale	HRA, HRB, HRC, HRD, HRE, HRF, HRG, HRH, HRK, HRL, HRM, HRP, HRR, HRS, HRV	HR15N, HR30N, HR45N, HR15T, HR30T, HR45T,
Stage elevation	manual	
Loading control	auto	
Loading time	1-60s	
Resolution	0.1HR	
Max. test height	200mm	
Max. throat	160mm	
Dimension	510×290×730mm	
Weight	95kg	

INCLUDED ACCESSORIES

Main unit	1pc
Ø1.5875mm ball carbide indenter	1pc
Diamond indenter	1pc
Small flat anvil	1pc
Large flat anvil	1pc
V-type anvil	1pc

HRA test block	1pc
HRB test block	1pc
HRC test block	3pcs
HR15N test block	1pc
HR30N test block	2pcs
HR30T test block	1pc

HB3000 DIGITAL BRINELL HARDNESS TESTER

Certificate

- Electronic close-loop load control system
- Can converted to HV, HK, HRA, HRB, HRC, HRD, HRE, HRF, HRG, HRK, HR15N, HR30N, HR45N, HR15T, HR30T, HR45T, HS
- Touch screen
- With manufacturer inspection certificate

VIDEO




Small flat anvil


Large flat anvil


V-type anvil

SPECIFICATION

Measuring range	8-650HBW
Loading force	62.5, 100, 125, 187.5, 250, 500, 750, 1000, 1500, 3000kgf
Measuring result	read from LCD
Stage elevation	manual
Load control	automatic
Load dwell time	5-60 seconds
Max. test height	225mm
Max. throat	135mm
Dimension	545×235×79mm
Weight	130kg

INCLUDED ACCESSORIES

Main unit	1pc
20X measuring microscope	1pc
Ø10mm carbide ball indenter	1pc
Ø5mm carbide ball indenter	1pc
Ø2.5mm carbide ball indenter	1pc
Small flat anvil	1pc

Large flat anvil	1pc
V-type anvil	1pc
Hardness test block 150-250HBW10/3000	1pc
Hardness test block 150-250HBW5/750	1pc
Anti-dust cover	1pc

OPTIONAL ACCESSORIES

Brinell indentation measuring system	**HB-MS**

HB-P1 HAMMER IMPACT BRINELL HARDNESS TESTER

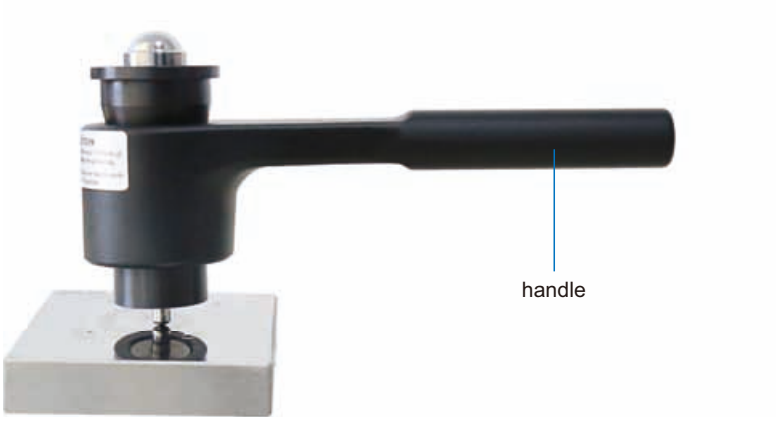

- Measure Brinell hardness of large or heavy workpieces
- 1580kg testing force and Ø7.26mm ball indenter, equal to 3000kg testing force and Ø10mm ball indenter



Hammer impact to apply test force

SPECIFICATION

Measuring range	100~350HBW (with Ø7.26mm indenter, included) 350~650HBW(with Ø4mm indenter, optional)
Test force	1580kg
Accuracy	±5%HBW
Repeatability	±5%HBW
Measuring microscope	20X, graduation 0.01mm
Dimension	200x50x100mm
Weight	0.8kg

INCLUDED ACCESSORIES

Main unit	1pc
Ø7.26mm indenter	1pc
Hardness test block	1pc
Measuring microscope	1pc
Pin	250 pcs
Pin removal tool	1pc

OPTIONAL ACCESSORIES

Ø4mm indenter	**HB-P1-IND**
Pin (250 pcs)	**HB-P1-PIN**

HB-MS BRINELL INDENTATION MEASURING SYSTEM

- Measure the indentation automatically
- Measuring result saved to Excel
- Low and high limits setting with judgement
- Can be calibrated with standard hardness blocks

VIDEO



Application



Software (included)

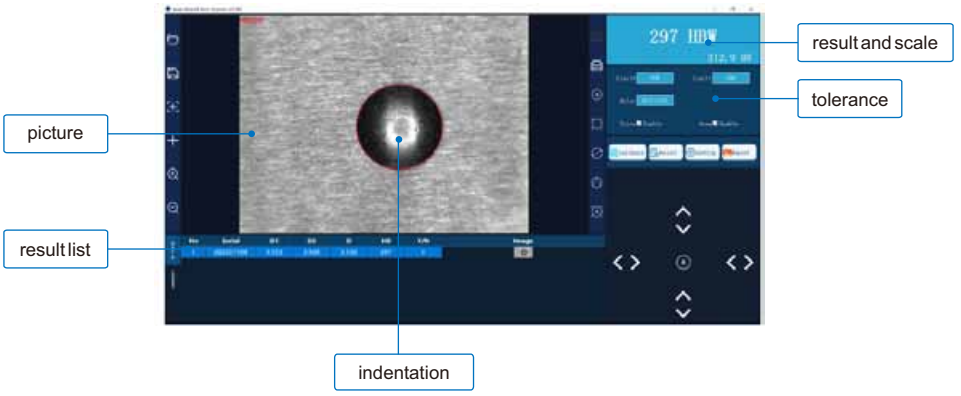

standard blocks

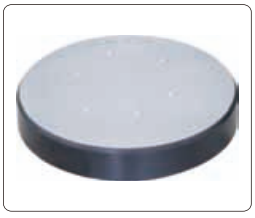

SPECIFICATION

Applicable brinell indenter		Ø10mm,Ø5mm, Ø2.5mm, Ø1mm
Hardness range		16~650HB
Range of indentation diameter		Ø0.6-6mm
Test force		30, 31.5, 62.5,100,125,187.5,250, 500, 750,1000, 1500,3000kgf
Hardness resolution		1HB
Diameter measuring resolution		0.001mm
Diameter measuring accuracy	**Ø10mm ball indenter**	±0.4%(indentation diameter)
	Ø5mm ball indenter	±0.8% (indentation diameter)
	Ø2.5mm ball indenter	±1.2% (indentation diameter)
Camera	**sensor**	CMOS
	pixel	5M (resolution 2592x1944)
	view filed	9x7mm
Dimension		170x54x54mm
Weight		400g

INCLUDED ACCESSORIES

Main unit	1pc
Software	1pc
Software dongle	1pc
Standard block:150-250 HBW 10/3000	1pc

OPTIONAL ACCESSORIES

Standard block:150-250 HBW 5/750	**BLK-HB2**
Standard block:150-250 HBW 2.5/187.5	**BLK-HB3**

HVS1000 MICRO-VICKERS HARDNESS TESTER

Certificate





computer is not included

- Economic type
- With camera, with measuring software, measure the hardness by computer
- For measuring the hardness of the thin, small workpiece or coating
- Automatic turret
- The hardness scale can be changed to Rockwell and Brinell scales
- With manufacturer inspection certificate

SPECIFICATION

Measuring range	8-2900HV
Test load	0.01, 0.025, 0.05, 0.1, 0.2, 0.3, 0.5, 1kgf
Unit	HV0.01, HV0.025, HV0.05, HV0.1, HV0.2, HV0.3, HV0.5, HV1
Stage elevation	manual
Loading control	automatic(loading/dwell/unloading)
Loading time	1 ~ 100s
Objective	10X(observation), 40X(measurement)
Max. test height	120mm
Max. throat	120mm
X-Y stage	size: 100×100mm
	travel range: 25×25mm
	graduation: 0.01mm
Dimension	595×415×810mm
Weight	45kg

INCLUDED ACCESSORIES

Main unit	1pc
X-Y stage	1pc
Test block	2pcs
Measuring software	1pc
USB dongle	1pc
Dustproof cover	1pc

OPTIONAL ACCESSORIES

Computer	**VM-PC**

HVS1000M MICRO-VICKERS HARDNESS TESTER

Certificate

- For measuring the hardness of the thin, small workpiece or coating
- Automatic turret
- The hardness scale can be changed to Rockwell and Brinell scales
- Touch screen
- With manufacturer inspection certificate

VIDEO



Measuring system **(optional)**



SPECIFICATION

Measuring range	8-2900HV
Test load	0.01, 0.025, 0.05, 0.1, 0.2, 0.3, 0.5, 1kgf
Unit	HV0.01, HV0.025, HV0.05, HV0.1, HV0.2, HV0.3, HV0.5, HV1
Stage elevation	manual
Loading control	automatic(loading/dwell/unloading)
Loading time	1~99s
Objective	10X(observation), 40X(measurement)
Eyepiece	10X
Total magnification	100X(observation), 400X(measurement)
Max. test height	100mm
Max. throat	130mm
X-Y stage	size: 100×100mm
	travel range: 25×25mm
	graduation: 0.01mm
Dimension	540×260×650mm
Weight	50kg

INCLUDED ACCESSORIES

Main unit	1pc
10X eyepiece	1pc
X-Y stage	1pc
Test block	2pcs
Touch screen pen	1pc
Level	1pc
Dustproof cover	1pc
Slice holder	1pc
Cylinder holder	1pc
Vice	1pc

OPTIONAL ACCESSORIES

Measuring system	**HVS-MS**

HVS1000S MICRO-VICKERS HARDNESS TESTER

Certificate

- Basic type
- For measuring the hardness of the thin, small workpiece or coating
- Automatic turret
- The hardness scale can be changed to Rockwell and Brinell scales
- With manufacturer inspection certificate



Measuring system **(optional)**



SPECIFICATION

Measuring range	8-2900HV
Test load	0.01, 0.025, 0.05, 0.1, 0.2, 0.3, 0.5, 1kgf
Unit	HV0.01, HV0.025, HV0.05, HV0.1, HV0.2, HV0.3, HV0.5, HV1
Stage elevation	manual
Loading control	automatic(loading/dwell/unloading)
Loading time	1~60s
Objective	10X(observation), 40X(measurement)
Eyepiece	10X
Total magnification	100X(observation), 400X(measurement)
Max. test height	100mm
Max. throat	110mm
X-Y stage	size: 100×100mm
	travel range: 25×25mm
	graduation: 0.01mm
Dimension	530×290×490mm
Weight	40kg

INCLUDED ACCESSORIES

Main unit	1pc
10X eyepiece	1pc
X-Y stage	1pc
Test block	1pc
Level	1pc
Dustproof cover	1pc
Slice holder	1pc
Cylinder holder	1pc
Vice	1pc

OPTIONAL ACCESSORIES

Measuring system	**HVS-MS**

HVS1000MS/HVS1000MCNC AUTOMATIC MICRO-VICKERS HARDNESS TESTER

Certificate

- Mainly used for various metal parts and parts after thermal treatment Vickers hardness measurement. It is also suitable for the determination of effective hardening depth, coating and heat affected parts of welding parts.
- It can also be used to observe the metallographic structure of various metal parts and collect, display and print the image
- Automatic turret
- The hardness scale can be changed to Rockwell and Brinell scales
- With manufacturer inspection certificate







HVS1000MCNC

SPECIFICATION

Code	HVS1000MS	HVS1000MCNC
Measuring range	8-2900HV	
Test load	0.01, 0.025, 0.05, 0.1, 0.2, 0.3, 0.5, 1kgf	
Unit	HV0.01, HV0.025, HV0.05, HV0.1, HV0.2, HV0.3, HV0.5, HV1	
Stage elevation	Manual	Automatic
Focus	Manual	Automatic
Repeatability	±1.0%	
Loading control	automatic(loading/dwell/unloading)	
Loading time	1~99s	
Objective	10X(observation), 40X(measurement)	
Eyepiece	10X	
Total magnification	10X(observation), 40X(measurement)	
Camera pixel	5M	
Max. test height	160mm	
Max. throat	160mm	
X-Y stage	size: 150×150mm	
	travel range: 50×50mm	
	movement graduation: 0.001mm	
	movement speed: 1-10mm/s, adjustable	
	movement position repeatability: 1-3um	
	control: the software system can control the X-Y stage movement automatically by programming, click any point to set the random moving position	
Dimension	540×260×650mm	
Weight	50kg	

INCLUDED ACCESSORIES

Main unit	1pc
10X eyepiece	1pc
Camera	1pc
C-mount	1pc
Computer(with software)	1pc
USB dongle	1pc
Level	1pc
Test block	2pcs
X-Y stage	1pc
Controller	1pc
Vice	1pc
Slice holder	1pc
Cylinder holder	1pc
Touch screen pen	1pc
Dustproof cover	1pc

HVS10M/50M VICKERS HARDNESS TESTER

Certificate

- Automatic turret
- Touch screen
- The hardness scale can be changed to Rockwell and Brinell scales
- With manufacturer inspection certificate

VIDEO



Measuring system **(optional)**



HVS50M

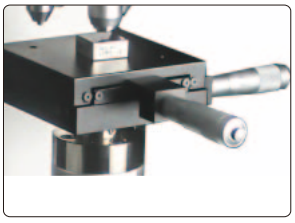

X-Y Stage**(Optional)**

SPECIFICATION

Code	HVS10M	HVS50M
Test load	0.05, 0.1, 0.2, 0.25, 0.3, 0.5, 1, 2, 2.5, 3, 5, 10kgf	0.3, 0.5, 1, 2, 2.5, 3, 5, 10, 20, 25, 30, 50kgf
Stage elevation	manual	
Loading control	automatic(loading/dwell/unloading)	
Loading time	1-99s (adjustable)	
Objective	10X(observation), 20X(measurement)	
Eyepiece	10X	
Total magnification	100X(observation), 200X(measurement)	
Max. test height	160mm	
Max. throat	135mm	
X-Y stage(optional)	size: 100×100mm	
	travel range: 25×25mm	
	graduation: 0.01mm	
Dimension	530×280×630mm	
Weight	35kg	

INCLUDED ACCESSORIES

Main unit	1pc
10X,20X Objective	1pc.each
Indenter	1pc
Test block	2pcs
V-avail	1pc
Flat avail	2pcs
Level	1pc
Dustproof cover	1pc

OPTIONAL ACCESSORIES

Measuring system	HVS-MS
X-Y stage	HVS-STAGE

RBV150C ROCKWELL/BRINELL/VICKERS HARDNESS TESTER

Certificate
Data output

- For Rockwell, Brinell and Vickers testing
- Rockwell testing value gets from screen, and the Brinell and Vickers hardness gets from table in the operation manual
- With manufacturer inspection certificate

VIDEO




Small flat anvil


Large flat anvil


V-type anvil

SPECIFICATION

Load force for Rockwell	Preload force:98N, Total force: 588 , 980 ,1471 N
Rockwell resolution	0.1HR
Load force for Brinell	306, 613, 1839N
Load force for Vickers	294N
Stage elevation	manual
Loading control	motorized
Max. test height	175mm(Rockwell),100mm(Brinell), 115mm(Vickers)
Max. throat	165mm
Dimension	520×240×700mm
Weight	105kg

INCLUDED ACCESSORIES

Main unit	1pc
Ø1.5875mm ball carbide indenter	1pc
Diamond indenter for Rockwell	1pc
Ø5mm ball indenter for Brinell	1pc
Ø2.5mm ball indenter for Brinell	1pc
Indenter for Vickers	1pc
Small flat anvil for Rockwell	1pc

Large flat anvil for Rockwell	1pc
V-type anvil	1pc
HRC hardness test block	2pcs
HRB hardness test block	1pc
Brinell hardness test block	1pc
Vickers hardness test block	1pc
Dustproof cover	1pc

OPTIONAL ACCESSORIES

Brinell indentation measuring system	**HB-MS**

RBV150D ROCKWELL/BRINELL/VICKERS HARDNESS TESTER

Certificate

Data output

- For Rockwell, Brinell and Vickers testing
- Eletronic close-loop load control system
- Touch screen
- With built-in printer
- With manufacturer inspection certificate



Small flat anvil



Large flat anvil



V-type anvil



SPECIFICATION

Load force for Rockwell	**Rockwell**	Preload force:10kgf, Total force: 60kgf , 100kgf ,150kgf
	Superficial Rockwell	Preload force:3kgf, Total force: 15kgf , 30kgf ,45kgf
Load force for Brinell		5, 6.25, 10, 15.625, 30, 31.25, 62.5, 100, 125, 187.5, 250kgf
Load force for Vickers		5, 10, 20, 30,40,60, 80,100,120kgf
Stage elevation		manual
Loading control		motorized
Eyepiece		15X (Brinell and Vickers)
Objective		2.5X, 5X (Brinell), 10X (Vickers)
Max. test height		180mm(Rockwell),165mm(Brinell), 165mm(Vickers)
Max. throat		160mm
Dimension		550×230×780mm
Weight		80kg

INCLUDED ACCESSORIES

Main unit	1pc
Ø1.5875mm ball carbide indenter	1pc
Diamond indenter for Rockwell	1pc
Ø5mm ball indenter for Brinell	1pc
Ø2.5mm ball indenter for Brinell	1pc
Indenter for Vickers	1pc
Small flat anvil for Rockwell	1pc

Large flat anvil for Rockwell	1pc
V-type anvil	1pc
HRC hardness test block	3pcs
HRB hardness test block	1pc
Brinell hardness test block	1pc
Vickers hardness test block	1pc
Objective (2.5X, 5X, 10X)	1pc.each

OPTIONAL ACCESSORIES

Brinell indentation measuring system	**HB-MS**

HL100 PORTABLE HARDNESS TESTER

Certificate AAA

- Large LCD display with backlight
- Based on HL scale, converted to other hardness scales (HV, HB, HRC, HRB, HS) and tensile strength MPa
- With wireless printer
- Can set impact direction
- With average value calculation function
- Automatic power off
- Conforms to the standard ASTM A956-02
- With manufacturer inspection certificate

VIDEO





Wireless printer (included)



Support ring (12pcs /set, **optional**)

SPECIFICATION

Resolution	1HLD, 1HV, 1HB, 0.1HRC, 0.1HRB, 1HS, 1MPa
Accuracy	±6HLD/0.6HRC(HLD=800)
Min. workpiece weight	5kg (directly)
	2kg (on solid support)
	0.1kg (coupled on large plate)
Min. workpiece thickness	5mm
Min. workpiece diameter	22mm
Max. workpiece surface roughness	1.6μm(Ra)
Power	3 x AAA batteries
Dimension	150 × 80× 24mm

INCLUDED ACCESSORIES

Main unit	1pc
Wireless printer	1pc
Test block	1pc
Small support ring	1pc
Brush	1pc
Charger for printer	1pc

OPTIONAL ACCESSORIES

Support ring (12pcs /set)	**HL-SP**

HL200 PORTABLE HARDNESS TESTER

Certificate | Data output | Charge

- Touch screen, with backlight
- Based on HL scale, converted to other hardness scales (HV, HB, HRC, HRB, HS) and tensile strength Mpa
- With wireless printer
- Can set impact direction
- Memory : 500
- Low and high limits with judgement
- Automatic power off
- Conforms to the standard ASTM A956-02
- With manufacturer inspection certificate

VIDEO





Support ring (12pcs /set, **optional**)



Wireless printer (included)



DC(optional) C(optional) D(included) D+15(optional) DL(optional) G(optional)

SPECIFICATION

Resolution	1HLD, 1HV, 1HB, 0.1HRC, 0.1HRB, 1HS, 1MPa
Accuracy	±6HLD/0.6HRC(HLD=800)
Power	Rechargeable battery
Dimension	135×83×24mm

INCLUDED ACCESSORIES

Main unit	1pc
Wireless printer	1pc
Test block	1pc
Small support ring and brush	1pc.each
USB cable and software	1pc
Charger	2pcs

OPTIONAL ACCESSORIES

Impact device DC	**HL200-DC**
Impact device C	**HL200-C**
Impact device D+15	**HL200-D15**
Impact device DL	**HL200-DL**
Impact device G	**HL200-G**
Support ring (12pcs /set)	**HL-SP**

APPLICABLE WORKPIECE

Impact device		**DC**	**C**	**D**	**D+15**	**DL**	**G**
Application		inner wall of small space	small or thin workpiece, coating layer	general use	deep groove	narrow slot or small hole	casting or forging workpiece
Maximum roughness of workpiece (Ra)		1.6μm	0.4μm	1.6μm	1.6μm	1.6μm	7μm
Minimum weight of workpiece	**direct measurement**	5kg	1.5kg	5kg	5kg	5kg	15kg
	on solid support	2kg	0.5kg	2kg	2kg	2kg	5kg
	coupled on plate	0.1kg	0.02kg	0.1kg	0.1kg	0.1kg	0.5kg
Minimum thickness of workpiece		5mm	1mm	5mm	5mm	5mm	10mm

HL350 PORTABLE HARDNESS TESTER

AAA

- Economic type
- Based on HL scale, converted to other hardness scales (HV, HB, HRC, HRB, HS) and tensile strength MPa
- Impact direction cab be set
- With average value calculation function
- Conforms to the standard ASTM A956-02

VIDEO

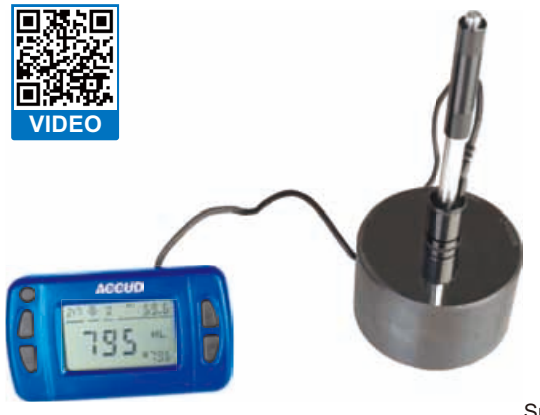



Support ring (12pcs /set, **optional**)

SPECIFICATION

Resolution	1HLD, 1HV, 1HB, 0.1HRC, 0.1HRB, 1HS, 1MPa
Accuracy	±8HLD/0.8HRC(HLD=800)
Min. workpiece weight	5kg (directly)
	2kg (on solid support)
	0.1kg (coupled on large plate)
Min. workpiece thickness	5mm
Min. workpiece diameter	22mm
Max. workpiece surface roughness	1.6μm(Ra)
Power	3 xAAA batteies
Dimension	121×68×30mm

INCLUDED ACCESSORIES

Main unit	1pc
Test block	1pc
Small support ring	1pc
Brush	1pc
Batteries	3pcs

OPTIONAL ACCESSORIES

Support ring (12pcs /set)	**HL-SP**

HL400 PORTABLE HARDNESS TESTER

Certificate Data output AAA

- Based on HL scale, converted to other hardness scales (HV, HB, HRC, HRB, HS) and tensile strength MPa
- Impact direction cab be set
- With average value calculation function
- Automatic power off
- Conforms to the standard ASTM A956-02
- With manufacturer inspection certificate

VIDEO



SPECIFICATION

Resolution	1HLD, 1HV, 1HB, 0.1HRC, 0.1HRB, 1HS, 1MPa
Accuracy	±6HLD/0.6HRC(HLD=800)
Min. workpiece weight	5kg (directly)
	2kg (on solid support)
	0.1kg (coupled on large plate)
Min. workpiece thickness	5mm
Min. workpiece diameter	22mm
Max. workpiece surface roughness	1.6μm(Ra)
Power	3 x AAA batteries
Dimension	150 × 80× 24mm

INCLUDED ACCESSORIES

Main unit	1pc
Test block	1pc
Small support ring	1pc
Brush	1pc
USB cable	1pc
Batteries	3pcs

HL450/HL450W PORTABLE HARDNESS TESTER

Certificate Charge

- Pocket size, easy to carry
- Based on HL scale, converted to other hardness scales (HV, HB, HRC, HRB, HS) and tensile strength MPa
- Impact direction can be set
- With average value calculation function
- Conforms to the standard ASTM A956-02
- With manufacturer inspection certificate



Support ring (12pcs/set, **optional**)

VIDEO





HL450

SPECIFICATION

Code	HL450	HL450W
Printer	with	without
Resolution	1HLD, 1HV, 1HB, 0.1HRC, 0.1HRB, 1HS, 1MPa	
Accuracy	±6HLD/0.6HRC(HLD=800)	
Min. workpiece weight	5kg (directly)	
	2kg (on solid support)	
	0.1kg (coupled on large plate)	
Min. workpiece thickness	5mm	
Min. workpiece diameter	30mm	
Max. workpiece surface roughness	1.6μm(Ra)	
Output	USB and wireless	
Power supply	rechargeable battery	
Dimension	147×35×22mm	
Weight	65g	

INCLUDED ACCESSORIES

Main unit	1pc
Test block	1pc
Small support ring	1pc

Brush	1pc
Charger	1pc

OPTIONAL ACCESSORIES

Support ring (12pcs/set)	HL-SP

GY-2 FRUIT HARDNESS TESTER

- Used to measure the hardness of some fruit like apples, pears
- Hardness can judge ripeness of the fruit



SPECIFICATION

Range	0.5-4kg/cm²(0.5-4x10^{5}pa)
Graduation	0.02kg/cm²(0.02x10^{5}pa)
Accuracy	±2%
Probe diameter	Ø3.5mm
Probe depth	10mm
Dimension	151x55x30mm
Weight	220g

INCLUDED ACCESSORIES

Main unit	1pc
Probe	1pc

HSC AUTOMATIC SHORE HARDNESS TESTER

Certificate | Data output

- Put the workpiece under the indenter, and press one button, the measuring results will be shown soon
- Can measure plastic, rubber, sponge with different hardness
- Include three indenters (type A, D, OO)
- Touch screen
- With data output
- With manufacturer inspection certificate

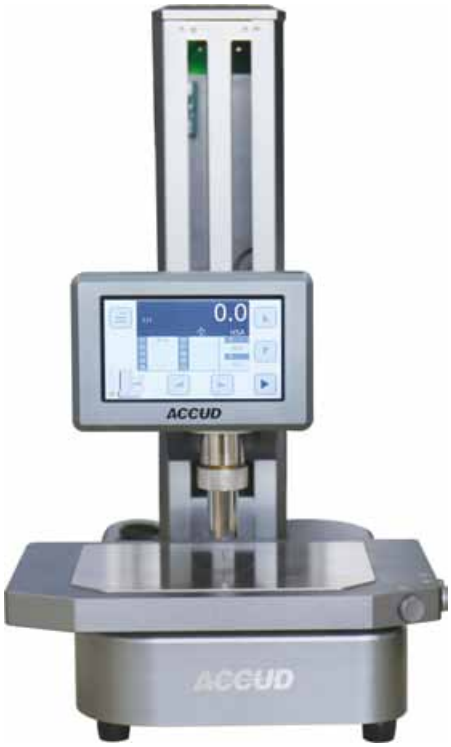

unit: mm

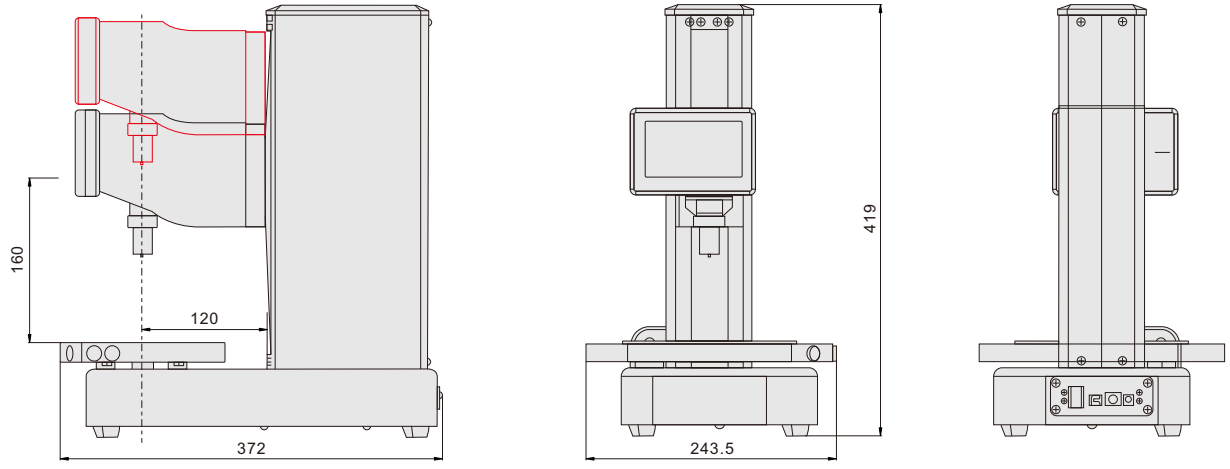

SPECIFICATION

Probe moving range	160mm
Stage moving range(X)	80mm
Loading control	Stepping motor
Loading force	Spring force
Max. workpiece height	120mm
Accuracy	±1
Resolution	0.1
Output	USB
Power supply	DC24V/5A

INCLUDED ACCESSORIES

Main unit	1pc
AD/DC adapter	1pc
Software and USB cable	1pc.each
A/D/OO indenter	1pc.each
Calibration block	2pcs

SERIES HS DIGITAL SHORE HARDNESS TESTER

Certificate | Data output | Charge

- Conforms to ISO868, ISO7619, ASTM D 2240
- Testing time is adjustable
- With average calculation function
- With manufacturer inspection certificate

VIDEO

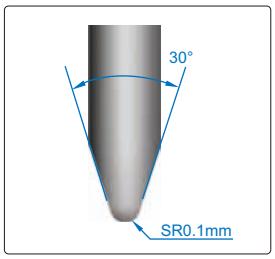

HS5D indenter

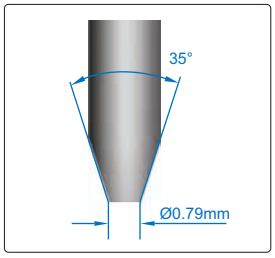

HS1A indenter

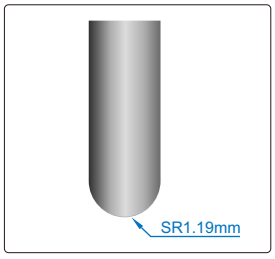

HSOO indenter



HS1A


Standard block (included)


PR100 printer **(optional)**


Standard **(optional)**

SPECIFICATION

Code	HS1A	HS5D	HSOO
Scale	HA(Shore A)	HD(Shore D)	HOO(Shore OO)
For material	soft plastic, rubber, leather, etc.	hard plastic, hard rubber, etc.	soft sponge, soft rubber, etc.
Measuring range	20~90HA	20~90HD	20~90HOO
Resolution	0.1HA	0.1HD	0.1HOO
Accuracy	±1HA	±1HD	±1HOO
Indenter protrusion	2.5mm		
Power	rechargeable battery		
Weight	180g		

INCLUDED ACCESSORIES

Main unit	1pc
Standard block	1pc
Charger	1pc
Software	1pc

OPTIONAL ACCESSORIES

Printer	PR100
Stand for HS1A	HS-1A-STD
Stand for HS5D	HS-5D-STD
Stand for HSOO	HS-OO-STD

SERIES HSM SHORE HARDNESS TESTER

- Conforms to ISO868, ISO7619, ASTM D 2240
- With peak value indicator



HSM-1A-ST stand (optional)



HSM1A

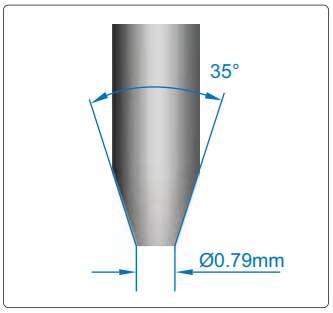

HSM1A indenter

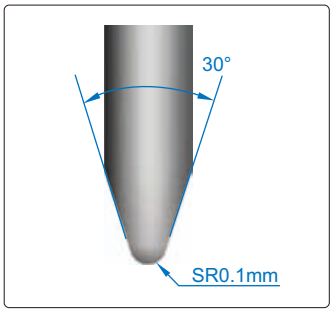

HSM5D indenter

SPECIFICATION

Code	HSM1A	HSM5D
Scale	HA(Shore A)	HD(Shore D)
For material	soft plastic, rubber, leather, etc.	hard plastic, hard rubber, etc.
Measuring range	20~90HA	20~90HD
Graduation	1HA	1HD
Accuracy	±1HA	±1HD
Indenter protrusion	2.5mm	
Weight	500g	

OPTIONAL ACCESSORIES

Stand for HSM1A	HSM-1A-ST
Stand for HSM5D	HSM-5D-ST

SERIES HS TEST STAND FOR DIGITAL SHORE HARDNESS TESTER

- For digital shore hardness tester
- Perform repeatable hardness measurement due to fewer posibilities of human error or measurement variations
- Special structure for stable loading



HS-1A-STD

SPECIFICATION

Code	HS-1A-STD	HS-5D-STD	HS-OO-STD
For hardness tester	HS1A	HS5D	HSOO
Test force (weight block)	1kg	5kg	0kg
Stage diameter	Ø115mm		
Max. workpiece height	45mm		
Max. testing width	63mm(from test point to the column)		
Dimension	Ø195x370mm		
Weight	5.6kg	11kg	4.5kg

SERIES HSM TEST STAND FOR SHORE HARDNESS TESTER

- For shore hardness tester
- Perform repeatable hardness measurement due to fewer posibilities of human error or measurement variations

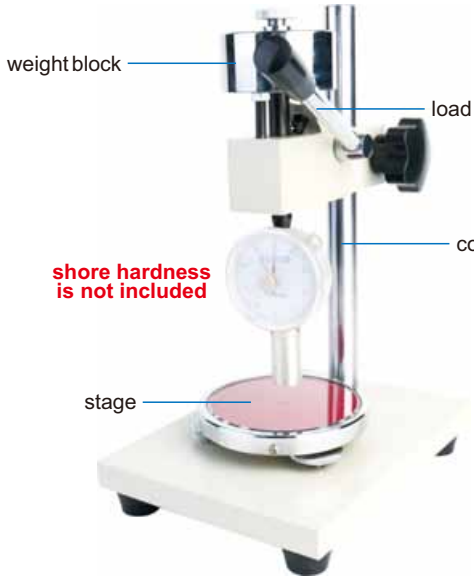

HSM-1A-ST

SPECIFICATION

Code	HSM-1A-ST	HSM-5D-ST
For hardness tester	HSM1A	HSM5D
Test force (weight block)	1kg	5kg
Stage diameter	Ø100mm	
Max. workpiece height	75mm	
Max. testing width	65mm (from test point to the column)	
Weight	2kg	7kg

UHT200 ULTRASONIC HARDNESS TESTER

Certificate | Data output | Charge

- Mainly used for small or thin-walled products as well as parts of complex shape or with areas that need to be tested in hard-to-reach places
- With a shockproof silicone case that prevents the device from malfunctioning
- Hardness scales: HV, HB, HRC and tensile strength Mpa
- Memory : 256
- Automatic power off
- With special software for data processing
- With manufacturer inspection certificate

VIDEO



Measure gear teeth



Measure small part



SPECIFICATION

Measuring range	**HRC**	20-70
	HB	90-650
	HV	230-940
	Mpa	370-1740
Accuracy	**HRC**	±1.5
	HB	±3%
	HV	±3%
Min. workpiece thickness		1mm
Min. workpiece diameter		5mm
Max. workpiece surface roughness		Ra:2.5μm
Min. thickness of surface hardening layer		0.1mm
Min. test area		Ø1mm
Power supply		Rechargeable battery
Dimension		122×65×24mm

INCLUDED ACCESSORIES

Main unit	1pc
Probe (50N)	1pc
Rechargeable battery	2pcs
USB cable and software	1pc.each
Charger	1pc

HB937-1 BARCOL HARDNESS TESTER

Certificate

- To measure the hardness of thick workpieces made of pure aluminum, aluminum alloy, fiber reinforced plastic, hard plastic, etc.
- Comforms to ASTM B648-2000
- With manufacturer inspection certificate



SPECIFICATION

Hardness range	0 ~ 100HBa (25 ~ 150HBW)
Graduation	1HBa
Accuracy	±2HBa (42 ~ 52HBa) ±1HBa (84 ~ 88HBa)
Min. workpiece thickness	0.8mm
Dimension	142×65×90mm
Weight	500g

INCLUDED ACCESSORIES

Main unit	1pc
Spare indenter	2pcs
Hardness test block	2pcs
Wrench	1pc

SERIES DHB937 DIGITAL BARCOL HARDNESS TESTER

AAA

- To measure the hardness of thick workpieces made of pure aluminum, aluminum alloy, fiber reinforced plastic, hard plastic, etc.
- Comforms to ASTM B648-2000
- The scale of DHB937-2 can converted to HW, HV HBW and HRE



DHB937-1

SPECIFICATION

Code	DHB937-1	DHB937-2
Scale conversion	No	Yes
Hardness range	0 ~ 100HBa (25 ~ 150HBW)	
Graduation	0.1HBa	
Accuracy	±2HBa (42 ~ 48HBa) ±1HBa (84 ~ 88HBa)	
Min. workpiece thickness	0.8mm	
Power supply	3×AAA batteries	
Dimension	180×70×90mm	
Weight	800g	

INCLUDED ACCESSORIES

Main unit	1pc
Spare indenter	2pcs
Calibration block	1pc
Battery	3pcs
Hardness test block	2pcs
Wrench	1pc

SERIES HW WEBSTER HARDNESS TESTER

- To measure the hardness of soft metal such as aluminum alloy, copper, brass, soft steel
- Conforms to the standard ASTM B647



HW-L20

SPECIFICATION

Code	HW-L20	HW-L20A	HW-L20B	HW-B75	HW-C75	HW-B92
Application	aluminum alloy			hard aluminum alloy and brass	soft brass and copper	soft steel and cold-rolled steel
Measuring hardness range	58-131HV			63-105HRF	18-100HRE	50-92HRB
Thickness range to be measured of flat workpiece	0.6~6mm	0.6~6mm(with an adapter sleeve) 6~13mm(without an adapter sleeve)	0.6~8mm	0.6~6mm	0.6~6mm	0.6~6mm
Min. Internal diameter of tube workpiece	Ø10mm	Ø10mm	Ø6mm	Ø10mm	Ø10mm	Ø10mm
Hardness range	0 ~ 20HW					
Min. reading	1HW					
Accuracy	±0.5HW (at 5 ~ 17HW)					
Dimension	205×30×85mm					
Weight	500g					

INCLUDED ACCESSORIES

Main unit	1pc	Hardness test block	1pc
Spare indenter	1pc	Wrench	1pc

STE70 DIGITAL REBOUND TESTER

Charge

- Measure the strength of general building com ponents, bridges andvarious concrete components (slabs, beams, columns, bridges and so on.)
- Built in national unified curve (JGJ/T23-2011)
- Small size, modular design, easy to use
- Built in large capacity memory, can store 999 standard components, and a single component can set up 99 measuring areas and 159840 measuring point data



SPECIFICATION

Measuring range	10-60Mpa
Impact energy	2.207J
Accuracy	±1
Sifness of spring	785±30N.m
Working length of spring	61.5±0.3mm
Tensile length of spring	75±0.3mm
Rated value of steel anvil	80±2
Operating temperature	-4°C-40°C
Display	2.08 inch OLED display
Power supply	rechargeable battery
Weight	1.1kg

INCLUDED ACCESSORIES

Main nuit	1pc
Sander	1pc
Spare spring	1set
Screwdriver	3pcs
Software and cable	1set
AD/DC adapter	1pc

PHT1000 PENCIL HARDNESS TESTER

- For measuring hardness of flat coating surfaces
- Conform to ASTM D3363, ISO 15184, BS3900-E19 and ECCA-T4/1



Application



400 grade abrasive paper (included)

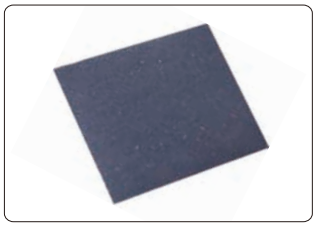

level (included)



pencils (included)



leveling rod (included)



weights (included)

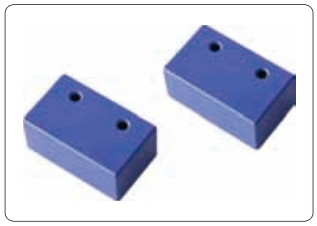

SPECIFICATION

Force of pencil on coating	500g, 750g, 1000g (main unit is 500g, one weight is 750g, two weights are 1000g)
Angle between pencil and measured surface	45°
Dimension (LxWxH)	95x80x110mm
Weight	2kg

INCLUDED ACCESSORIES

Main unit	1 pc
Weights	2 pcs
Leveling rod	1 pc
Leve	1 pc
Pencil	12 pcs(4B, 3B, 2B, B, HB, F, H, 2H, 3H, 4H, 5H, 6H)
Pencil sharpener	1 pc
400 grade abrasive paper	10 pcs

SERIES BLK STANDARD HARDNESS BLOCK



Rockwell/Vickers/Brinell



Shore A



Leeb

SPECIFICATION

Code	Type	Hardness
BLK-HRC1	Rockwell C	60-70HRC
BLK-HRC2		20-30HRC
BLK-HRC3		30-35HRC
BLK-HRC4		40-50HRC
BLK-HRC5		50-55HRC
BLK-HRB1	Rockwell B	85-95HRB
BLK-HRB2		60-70HRB
BLK-HRA1	Rockwell A	70-85HRA
BLK-HRA2		60-70HRA
BLK-HR15N	Rockwell superficial	88-92HR15N
BLK-HR15T		85-91HR15T
BLK-HR30NB		45-55HR30N
BLK-HR30N		74-82HR30N
BLK-HR30T		70-80HR30T
BLK-HR45N		45-55HR45N
BLK-HR45T		54-72HR45T
BLK-HV1	Vickers	700-800HV5
BLK-HV2		700-800HV10
BLK-HV3		400-600HV5
BLK-HV4		400-600HV10
BLK-HV30		700-800HV30
BLK-HV50		700-800HV50
BLK-HV1H		1300-1500HV5
BLK-HV1T		1500-1700HV5
BLK-MHV1	Micro-vickers	175-225HV0.05
BLK-MHV2		175-225HV0.1
BLK-MHV21		400-600HV0.1
BLK-MHV3		400-600HV0.2
BLK-MHV31		700-800HV0.2
BLK-MHV4		700-800HV0.3
BLK-MHV5		700-800HV0.5
BLK-MHV6		700-800HV1
BLK-MHV61		1300-1500HV1
BLK-MHV62		1500-1700HV1

Code	Type	Hardness
BLK-HK005	Knoop	175-225HK0.05
BLK-HK01		175-225HK0.1
BLK-HK01B		400-600HK0.1
BLK-HK02		400-600HK0.2
BLK-HK02B		700-800HK0.2
BLK-HK03		700-800HK0.3
BLK-HK05		700-800HK0.5
BLK-HK1		700-800HK1
BLK-HB1	Brinell	150-250HBW 10/3000
BLK-HB2		150-250HBW 5/750
BLK-HB3		150-250HBW 2.5/187.5
BLK-HB1B		150-170HBW 10/3000
BLK-HB1C		250-350HBW 10/3000
BLK-HB4		75-125HBW 10/1500
BLK-HB4B		150-250HBW 10/1500
BLK-HB5		75-125HBW 10/1000
BLK-HB3B		250-350HBW 2.5/187.5
BLK-HB7		75-125HBW 2.5/62.5
BLK-HB2B		250-350HBW 5/750
BLK-HB6		75-125HBW 5/250
BLK-HLD	Leeb	750-830HLD
BLK-HLD2		590-670HLD
BLK-HLD3		490-570HLD
BLK-HLG1		460-540HLG
BLK-HLG2		550-630HLG
BLK-HSA	Shore A	7pcs/set: 30-39HA, 40-49HA, 50-59HA, 60-69HA, 70-79HA, 80-89HA, 90-99HA
BLK-HSD	Shore D	3pcs/set: 13-15HD, 29-31HD, 88-90HD
BLK-HWA1	Webster	8-12HWA
BLK-HWA2		14-18HWA
BLK-HBA1	Barcol	82-88HBA
BLK-HBA2		42-55HBA
BLK-HRCU	Ultrasonic	60-70HRC
BLK-HV5U		700-800HV5

SERIES RP100XS

PROFILE AND ROUGHNESS MEASURING MACHINE

- Can measure the surface profile and roughness with same probe at same time(for **RP100RS**)
- With high precision and good linearity digital probe(for **RP100RS and RP100TS**)
- Easy to install and replace without calibration
- Stylus can contact, lift and return automatically
- CAD file can be exported and imported(for **RP100RS and RP100JS**)



RP100RS



stage
(code: **RP100RS-STAGE**)

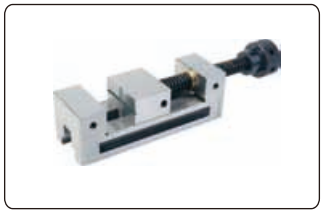

vice

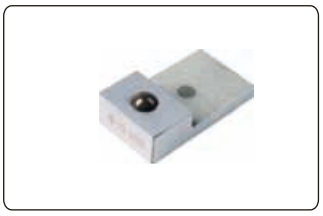

profile calibration block
(for **RP100RS and RP100JS**)



roughness calibration block
(for **RP100RS and RP100TS**)



Ø3*24mm point stylus

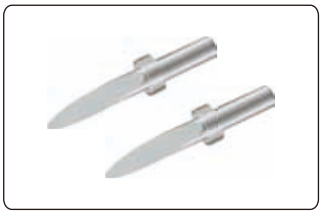

Ø3*24mm knife stylus

SERIES RP100XS PROFILE AND ROUGHNESS MEASURING MACHINE

SPECIFICATION

Code		RP100RS	RP100TS	RP100JS
Measuring object		profile and roughness	roughness	profile
Roughness parameter		**Ra, Rq, Rz(Ry), R3z, Rz(DIN), Rz(JIS), Rz(ISO),Rp, Rv, Rt, Rsk, Rsm, Rc, Rpm, Rku, Rdq, Roc, Mr1, Mr2, Rpk, Rvk, Rk, Rdc, A1, A2, R, Rx, AR, Rcp, Rmax**		\
Wave parameter		**wt, wa, wp, wv, wq, wc, wku, wsk, w, wx, wz, wsm, wdc, wte, wmr, Aw, c(wmr), wmr(c), wdq**		\
Profile parameter		**Pt, Pa, Pp, Pv, Pq, Pc, Pku, Psk, Pdq/p△q, Psm, Pdc, Pmr(c), Pz, pmr, C(pmr)**		\
Profile	**X** axis range	100mm	\	100mm
	X axis straightness	0.8μm/100mm	\	0.8μm/100mm
	Z axis range	650mm	\	650mm
	Z1 axis range (probe)	40mm	\	40mm
	Accuracy	±(1+0.12H)um, H is measuring height in mm	\	±(1+0.12H)um, H is measuring height in mm
	Measuring arc accuracy	±(1.5+R/8)um, R is measuring radius in mm	\	±(1.5+R/8)um, R is measuring radius in mm
	Measuring angle accuracy	±2'	\	±2'
Roughness	**Z1** axis range (probe)	40mm	20mm	\
	Accuracy	±5%		\
	Repeatability	±3%		\
	Resolution	0.0001um		\
	Number of cut-offs	3-7		\
	Cut off	0.025, 0.08, 0.25, 0.8, 2.5, 8mm		\
Climbing ability		77°(up), 88°(down)		
Measuring speed		0.02mm- 4.0mm/s		
Measuring mode		probe movement		
Movement control		joystick		
Power supply		220V		
Size		985x710x1450mm		

INCLUDED ACCESSORIES

Main unit	1pc
Profile calibration block(for RP100RS and RP100JS)	1pc
Roughness calibration block(for RP100RS and RP100TS)	1pc
Stage (code: RP100RS-STAGE)	1pc
Vise	1pc
Ø3x24mm R0.025mm knife stylus	2pcs

Ø3x24mm R5μm point stylus	1pc
Ø8x150mm measuring rod	1pc
Computer	1pc
Printer	1pc
Anti-dust cover	1pc
UPS	1pc

Measuring profile

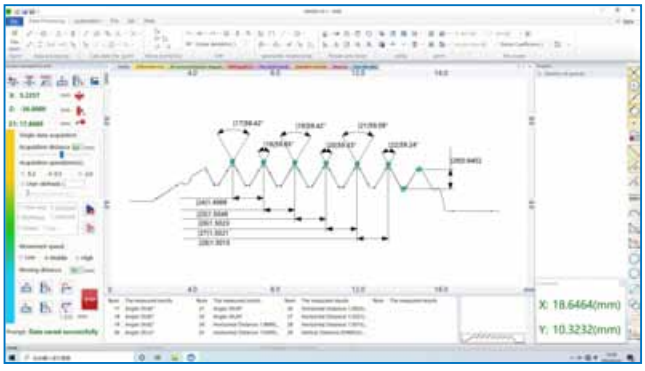

Measuring roughness

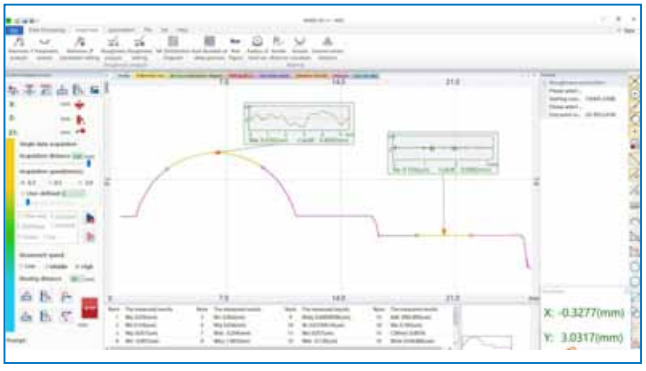

RP150RS ROUGHNESS AND CONTOUR MEASURING MACHINE

- Can make double side measurement
- Can measure the surface profile and roughness with same probe at same time
- With high precision and good linearity digital probe
- Easy to install and replace without calibration
- Stylus can contact, lift and return automatically
- CAD file can be exported and imported
- Multilingual version software: Chinese, English, Russian





stage
(code: **RP100RS-STAGE**)



roughness calibration block



Ø35mm ring gauge

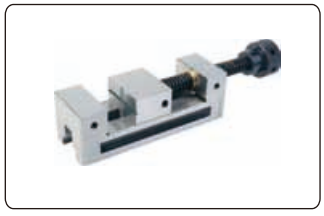

vice



profile calibration block

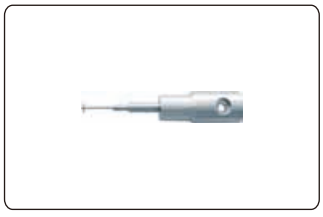

Φ0.6*4mm double side stylus

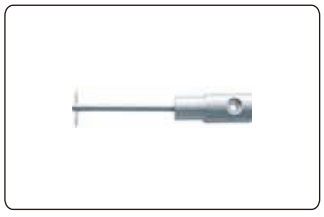

Φ1*15mm double side stylus



Φ3*24mm point stylus

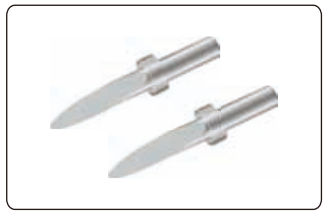

Φ3*24mm knife stylus

RP150RS PROFILE AND ROUGHNESS MEASURING MACHINE

SPECIFICATION

Measuring object		profile and roughness
Roughness parameter		**Ra, Rq, Rz(Ry), R3z, Rz(DIN), Rz(JIS), Rz(ISO),Rp, Rv, Rt, Rsk, Rsm, Rc, Rpm, Rku, Rdq, Roc, Mr1, Mr2, Rpk, Rvk, Rk, Rdc, A1, A2, R, Rx, AR, Rcp, Rmax**
Wave parameter		**wt, wa, wp, wv, wq, wc, wku, wsk, w, wx, wz, wsm, wdc, wte, wmr, Aw, c(wmr), wmr(c), wdq**
Profile parameter		**Pt, Pa, Pp, Pv, Pq, Pc, Pku, Psk, Pdq/p△q, Psm, Pdc, Pmr(c), Pz, pmr, C(pmr)**
Profile	**X** axis range	150mm
	X axis straightness	0.8μm/100mm
	Z axis range	450mm
	Z1 axis range (probe)	±30mm
	Accuracy	±(0.8+0.12H)um, H is measuring height in mm
	Measuring arc accuracy	±(1.5+R/8)um, R is measuring radius in mm
	Measuring angle accuracy	±2'
	Measuring tread range	M2-M100
	Measuring tread accuracy	≤±(4+0.04H)μm, column moving
		≤±(4+0.02H)μm (inner thread≤100mm outer thread ≤30mm), column no moving
Roughness	**Z1** axis range (probe)	±30mm
	Accuracy	±5%
	Repeatability	±3%
	Resolution	0.0001um
	Number of cut-offs	3-7
	Cut off	0.025, 0.08, 0.25, 0.8, 2.5, 8mm
Climbing ability		77°(up), 88°(down)
Measuring speed		0.02mm-2.0mm/s
Measuring mode		probe movement
Movement control		joystick
Power supply		220V
Size		985x710x1450mm

INCLUDED ACCESSORIES

Main unit	1pc
Profile calibration block	1pc
Roughness calibration block	1pc
Stage (code: RP100RS-STAGE)	1pc
Vise	1pc
Ø35mm ring gauge	1pc
Ø0.6x4mm double side stylus	1pc
Ø1x15mm double side stylus	3pcs

Ø3x24mm R0.025mm knife stylus	2pcs
Ø3x24mm R5μm point stylus	1pc
Ø8x150mm measuring rod	2pcs
Computer	1pc
Printer	1pc
Stylus adapter	2pcs
UPS	1pc
Electronic balance	1pc

Measuring profile

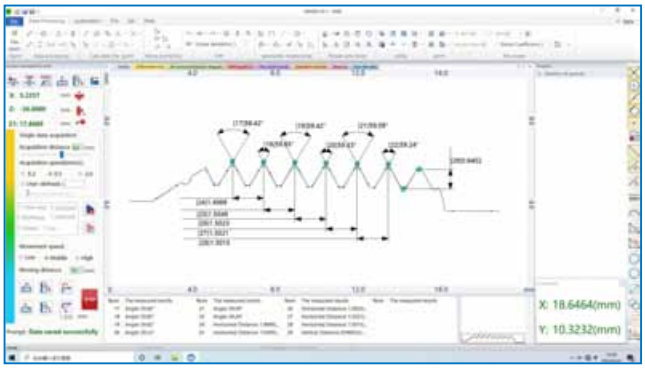

Measuring roughness

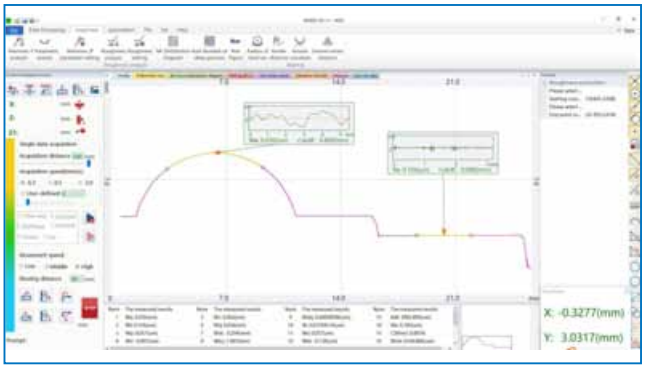

STYLUS FOR ROUGHNESS AND CONTOUR MEASURING MACHINE

Standard point stylus

unit: mm

Code	L	L1	L2	Ø1	Ø2	Ø3	θ	R
RP-D1001	4					1	60	0.005
RP-D1002	6							
RP-D1003	8							
RP-D1004	10							
RP-D1005	12							
RP-D3001	24	8	16	2.2	5	3		
RP-D3002	24		16					0.002
RP-D3003	35		27					
RP-D3004	15		7					0.005
RP-D2001	12	4	8	1.5	4	2		

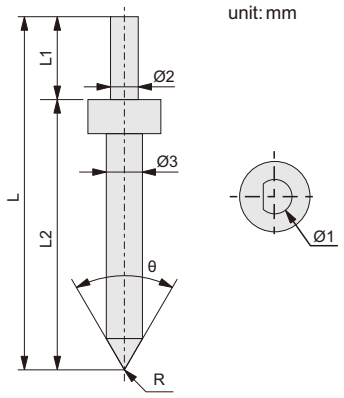

Needle point stylus

Code	L	L1	L2	Ø1	Ø2	Ø3	θ	R
RP-N1001	4					1	24	0.025
RP-N1002	6							
RP-N1003	8							
RP-N1004	10							
RP-N1005	12							
RP-N2001	17					2		
RP-N2002	31	6	25	2	4			
RP-N3001	24	8	16	2.2	5	3		
RP-N3002	30		22					

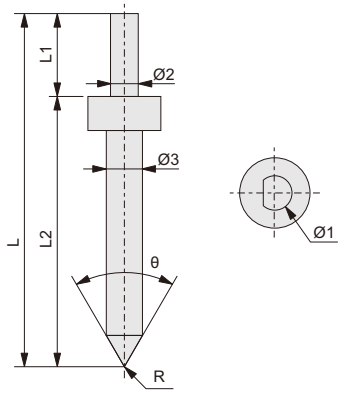

Knife stylus

Code	L	L1	L2	Ø1	Ø2	Ø3	θ	R
RP-SP1001	6					1	12	0.025
RP-SP1002	8							
RP-SP1003	10							
RP-SP1004	12							
RP-SP2001	12	4	8	1.5	4	2	18	
RP-SP2002	17						12	
RP-SP2003	21	6	15	1.5	4			
RP-SP3010	15	8	7	2.2	5	3	31	
RP-SP3001	24		16				12	
RP-SP3002	30		22					
RP-SP3003	35		27					
RP-SP3004	38		30					
RP-SP3005	43		35					
RP-SP3006	48		40					
RP-SP3007	53		45					
RP-SP3008	58		50					

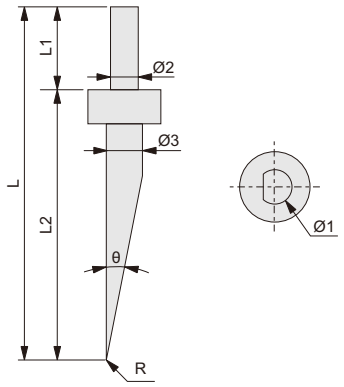

Special stylus

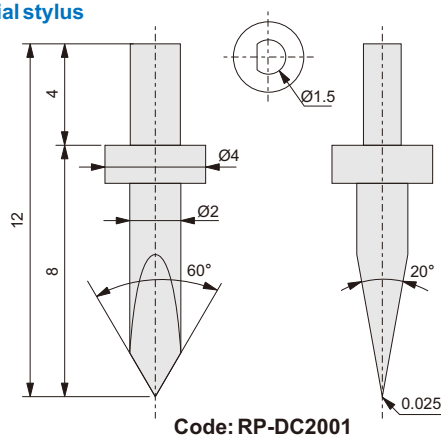

Code: RP-DC2001

Two directions stylus

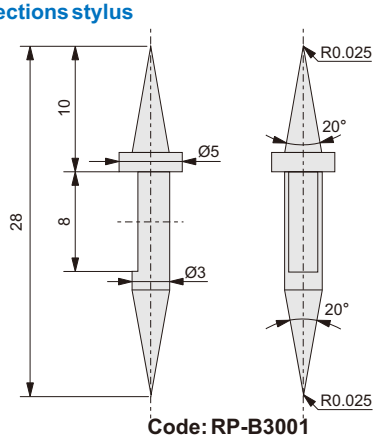

Code: RP-B3001

SERIES RP — MEASURING ROD FOR ROUGHNESS AND CONTOUR MEASURING MACHINE

Standard Measuring Rod

Code	L	Ø1	Ø2
RP-S8101	100	8	2
RP-S8102	100		3
RP-S8151	150		2
RP-S8152	150		3
RP-S8201	200		2
RP-S8202	200		3

unit: mm

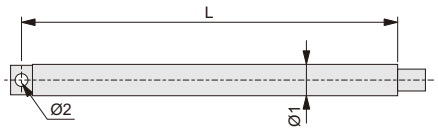

Measuring Rod for SamII Hole

Code	L	L1	Ø1	Ø2	Ø3
RP-R8131	130	100	8	2	1
RP-R8151	150	100		2	1
RP-R8181	180	150		2	1
RP-R8132	130	100		4	2
RP-R8152	150	100		4	2
RP-R8182	180	150		4	2

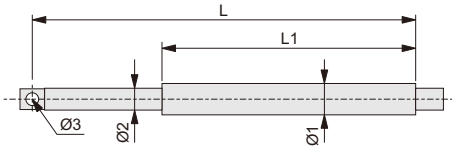

Side Measuring Rod

Code	L	L1	Ø1	Ø2	Ø3
RP-N810151	100	15	8	6	2
RP-N810152	100			8	3
RP-N815151	150			6	2
RP-N815152	150			8	3
RP-N820151	200			6	2
RP-N820152	200			8	3

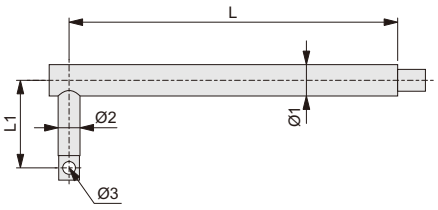

RC30 — SURFACE ROUGHNESS SPECIMEN

- For checking, identifying and specifying the roughness by symbol
- Accuracy: -17% ~ +12%



Machining method	Quantity	Roughness (Ra)
Flat lapping	2	0.1, 0.05μm
External grinding	4	0.2, 0.4, 0.8, 1.6μm
Plain grinding	6	0.05, 0.1, 0.2, 0.4, 0.8, 1.6μm
Horizontal milling	6	0.4, 0.8, 1.6, 3.2, 6.3, 12.5μm
Vertical milling	6	0.4, 0.8, 1.6, 3.2, 6.3, 12.5μm
Turning	6	0.4, 0.8, 1.6, 3.2, 6.3, 12.5μm

SR100 MINI ROUGHNESS TESTER

Certificate Charge

- Small size, easy to take
- 14 roughness parameters
- With probe position indicator
- Roughness values, profile, and curve can be shown on the display
- Memory of maximum 50 results
- Automatic power off
- With manufacturer inspection certificate

VIDEO



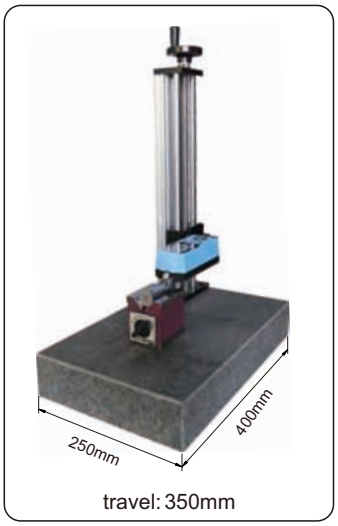

travel: 350mm

Heavy duty test stand SR200-STD (optional)

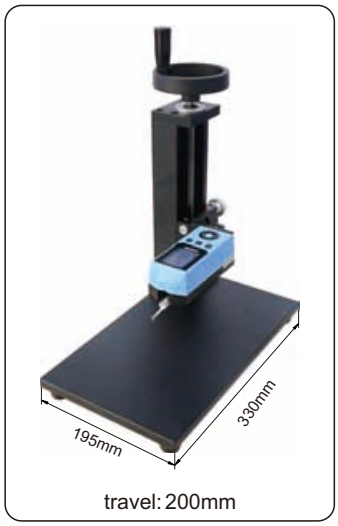

travel: 200mm

Light duty test stand SR200-STD1 (optional)

unit: mm

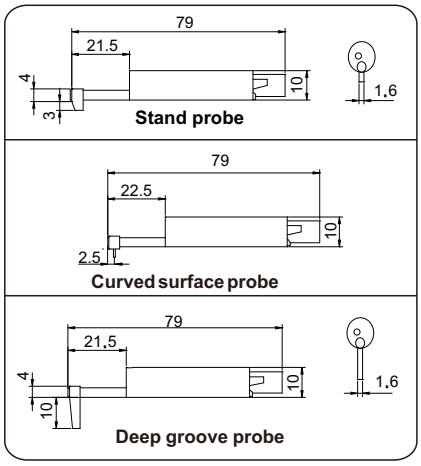

SPECIFICATION

Parameters		Ra, Rq, Rz, Rt, Rp, Rv, RS, RSm, Rsk, Rku, RPc, Ry, Rmax, R3z
Range (Z axis)		±80μm
Accuracy		±10%
Resolution (Ra)		0.001μm
Probe	**type**	inductive
	stylus radius/angle	5μm/90°
	stylus material	diamond
Measuring force		4mN
Measuring unit		μm/μin
Cut off		0.25/0.8/2.5mm
Number of cut-offs		1-5
Traverse speed		0.5mm/s, 0.75mm/s, 1mm/s
Memory		50 measurement results
Power		built-in rechargeble battery
Dimension(L×W×H)		126×55×46.5mm
Weight		380g

INCLUDED ACCESSORIES

Main unit	1pc
Standard probe	1pc
Calibration block	1pc
Calibration support	1pc
Probe cover	1pc
AC/DC adapter	1pc

OPTIONAL ACCESSORIES

Extension rod	**SR200-ER**
Curved surface probe	**SR200-02**
Deep groove probe	**SR200-04**
Heavy duty test stand	**SR200-STD**
Light duty test stand	**SR200-STD1**
Printer	**SR200-PR**

SR200 ROUGHNESS TESTER

Certificate | Data output | Charge

- 21 roughness parameters
- With probe position indicator
- Roughness values, profile, and curve can be shown on the display
- Memory of maximum 100 results
- With a mini SD card slot, can save the result into SD card
- Automatic power off
- With manufacturer inspection certificate



VIDEO

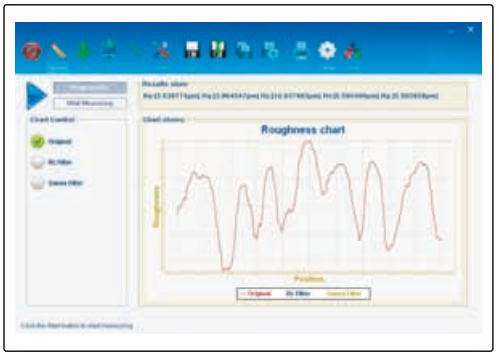

Measuring software

unit: mm

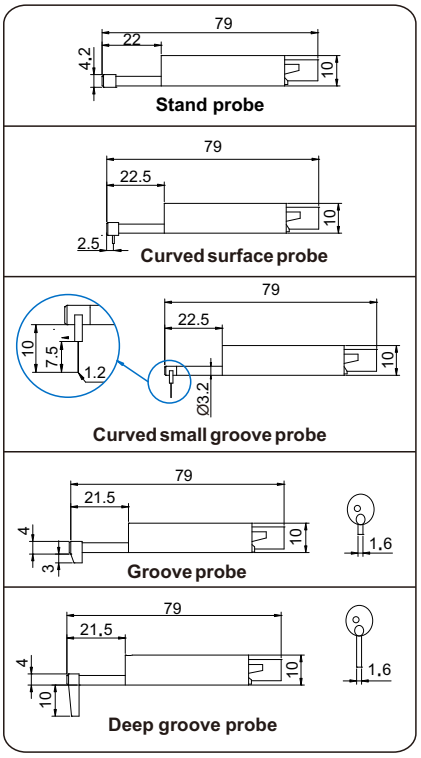



Heavy duty test stand SR200-STD (optional)

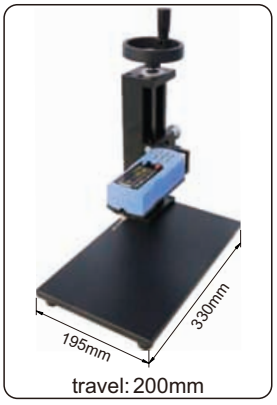

Light duty test stand SR200-STD1 (optional)

SPECIFICATION

Parameters		Ra, Rz, Rq, Rp, Ry, Rv, Rs, R3z, R3y, Rt, Rmax, Rk, Rku, Rsm, Rpc, Rpk,Rvk, Rsk, Mr1, Mr2, Rz(JIS)
Range (Z axis)		±80µm
Accuracy		±10%
Resolution (Ra)		0.001µm
Probe	**type**	inductive
	stylus radius/angle	5µm/90°
	stylus material	diamond
Measuring force		4mN
Measuring unit		µm/µin
Cut off		0.25/0.8/2.5mm
Number of cut-offs		1-5
Traverse speed		0.5mm/s, 1mm/s
Memory		100 measurement results
Output		USB
Power		built-in rechargeble battery
Dimension(L×W×H)		140×58×48mm
Weight		440g

INCLUDED ACCESSORIES

Main unit	1pc
Standard probe	1pc
Calibration block	1pc
Calibration support	1pc
Adjustable stand	1pc
Probe cover	1pc
USB cable and software	1pc
AC/DC adapter	1pc
Software	1pc

OPTIONAL ACCESSORIES

Extension rod	**SR200-ER**
Curved surface probe	**SR200-02**
Groove probe	**SR200-03**
Deep groove probe	**SR200-04**
Curved small groove probe	**SR200-05**
Heavy duty test stand	**SR200-STD**
Light duty test stand	**SR200-STD1**
Printer	**SR200-PR**

SR300 ROUGHNESS TESTER

Certificate | Data output | Charge

- Pocket size
- With a tablet, can set the parameter quickly
- Connected with tablet via bluetooth
- Roughness values, profile, and curve can be shown on the display
- With manufacturer inspection certificate







Measuring software

unit: mm

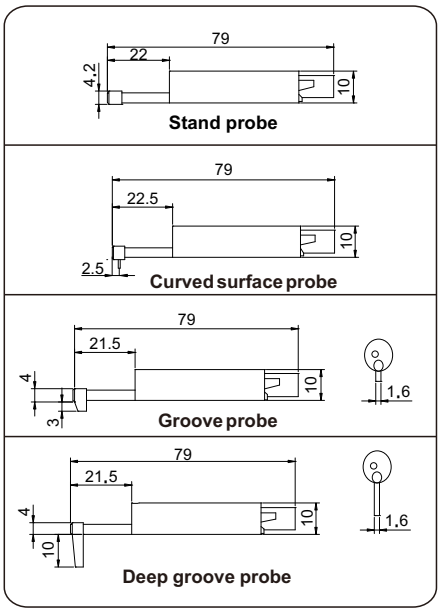

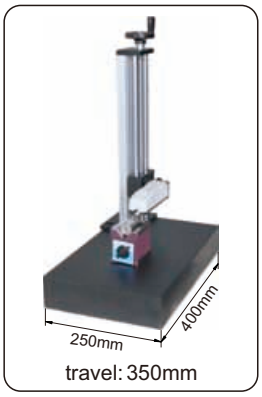

Heavy duty test stand SR200-STD (optional)

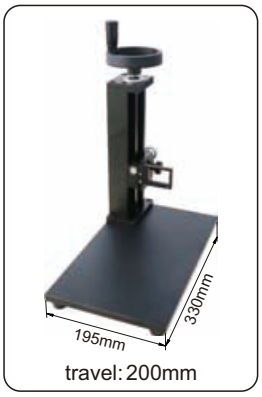

Light duty test stand SR200-STD1 (optional)

SPECIFICATION

Parameters		Ra, Rz, Ry,Rq, Rp, Rm, Rt R3z, Rmax, Sk, S, Sm, tp
Range (Z axis)		±80μm
Accuracy		±10%
Resolution (Ra)		0.001μm
Probe	**type**	inductive
	stylus radius/angle	5μm/90°
	stylus material	diamond
Measuring force		4mN
Measuring unit		μm/μin
Cut off		0.25/0.8/2.5mm
Number of cut-offs		1-5
Traverse speed		0.5mm/s, 1mm/s
Output file format		Word, Excel
Power		built-in rechargeble battery
Dimension(L×W×H)		130×40×44mm
Weight		340g

INCLUDED ACCESSORIES

Main unit	1pc
Standard probe	1pc
Tablet	1pc
Calibration block	1pc
Calibration support	1pc
USB cable	1pc
AC/DC adapter	1pc

OPTIONAL ACCESSORIES

Extension rod	**SR200-ER**
Curved surface probe	**SR200-02**
Groove probe	**SR200-03**
Deep groove probe	**SR200-04**
Heavy duty test stand	**SR200-STD**
Light duty test stand	**SR200-STD1**
Printer	**SR200-PR**

SR400 ROUGHNESS TESTER

Certificate | Data output | Charge

- The probe can be working with the main unit separately
- 21 roughness parameters
- With probe position indicator
- Roughness values, profile, and curve can be shown on the display
- Memory of maximum 100 results
- Automatic power off
- With manufacturer inspection certificate

VIDEO



unit: mm

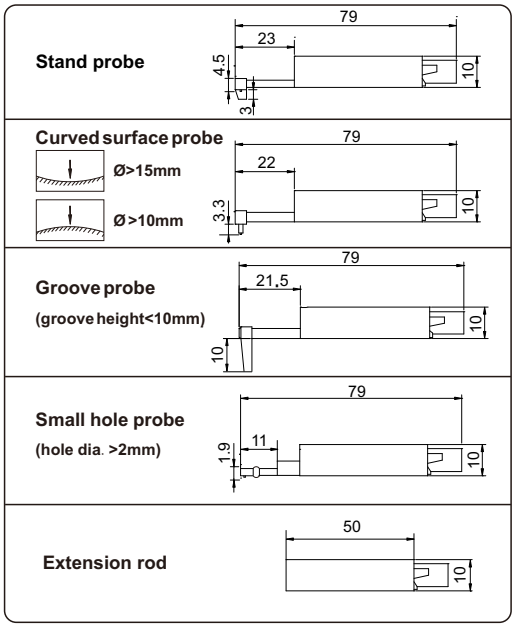

Working with height gauge



Work together

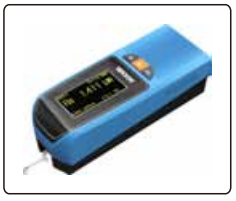

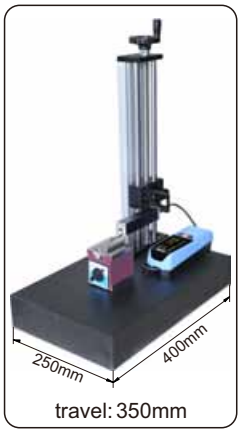

travel: 350mm

Heavy duty test stand SR200-STD (optional)

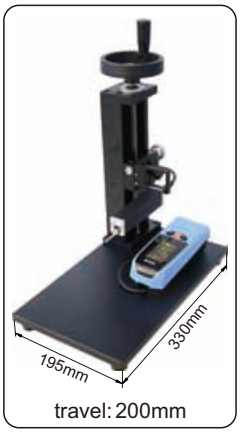

travel: 200mm

Light duty test stand SR200-STD1 (optional)

SPECIFICATION

Parameters		Ra, Rz, Rq, Rp, Ry, Rv, Rs, R3z, R3y, Rt, Rmax, Rk, Rku, Rsm, Rpc, Rpk, Rvk, Rsk, Mr1, Mr2, Rz(JIS)
Range (Z axis)		±80μm
Accuracy		±10%
Resolution(Ra)		0.001μm
Probe	**type**	inductive
	stylus radius/angle	5μm/90°
	stylus material	diamond
Measuring force		4mN
Measuring unit		μm/μin
Cut off		0.25/0.8/2.5mm
Number of cut-offs		1-5
Traverse speed		0.5mm/s, 1mm/s
Memory		100 measurement results
Output		USB
Power		built-in rechargeble battery
Dimension(L×W×H)		158×64×52mm
Weight		400g

INCLUDED ACCESSORIES

Main unit	1pc
Standard probe	1pc
Calibration block	1pc
Calibration support	1pc
Cable(long and short)	2pcs
USB cable and software	1pc
AC/DC adapter	1pc

OPTIONAL ACCESSORIES

50mm extension rod	**SR400-ER**
Curved surface probe	**SR400-02**
Deep groove probe	**SR400-03**
Small hole probe	**SR400-04**
Heavy duty test stand	**SR200-STD**
Light duty test stand	**SR200-STD1**
Printer	**SR400-PR**
Connector for height gage	**SR400-SP1**

SR110 ROUGHNESS TESTER

Certificate | Charge

- Pocket size
- Automatic power off
- With manufacturer inspection certificate

VIDEO



SPECIFICATION

Parameters		Ra, Rz, Rq, Rt
Range (Ra)		±10µm
Accuracy		±15%
Resolution (Ra)		0.001µm
Probe	**type**	piezoelectric
	stylus radius/angle	10µm/90°
	stylus material	diamond
Measuring force		0.5N
Measuring unit		µm/µin
Cut off		0.25/0.8/2.5mm
Evaluation length		1.25/4/5mm
Power		built-in rechargeble battery
Dimension(L×W×H)		114×82×33mm
Weight		160g

INCLUDED ACCESSORIES

Main unit	1pc
Calibration block	1pc
Calibration support	1pc
USB cable	1pc
AC/DC adapter	1pc

489 DIGITAL SURFACE PROFILE GAUGE

Data output | CR2032

- Measure peak-to-valley height of blast cleaned surface.
  If the profile is too low, the adhesion of the coating to the surface will be reduced.
  If the profile is too high, it is dangerous that the profile peaks will remain non-coating, rust spots maybe occur.
- Meet ASTM D 4417-B
- Zero set block is included, set zero before measurement
- Buttons: tolerance Go and No-Go display, data preset, measuring direction change, max./min./TIR measurement, inch/metric conversion, ABS/INC measurement
- Automatically power off (time is adjustable)
- Data output (cable code:200-03 or 200-04)
- Stainless steel base



unit: mm

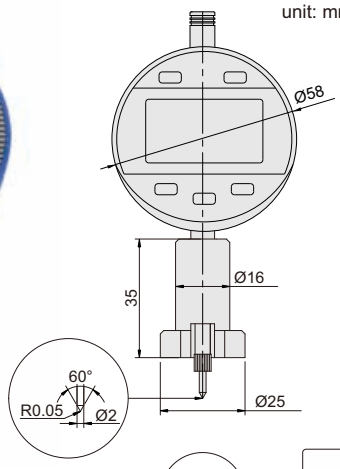

measure peak-to-valley height of blast cleaned surface

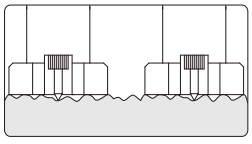

Set zero



Code	Range	Digital indicator stroke	Digital indicator resolution	Accuracy
489-010-01	0-12.7mm/0-0.5"	12.7mm/0.5"	0.001mm/0.00005"	±0.005mm

489 DIGITAL SURFACE PROFILE GAUGE

Data output | CR2032

- Measure peak-to-valley height of blast cleaned surface.
  If the profile is too low, the adhesion of the coating to the surface will be reduced.
  If the profile is too high, it is dangerous that the profile peaks will remain non-coating, rust spots maybe occur.
- Meet ASTM D 4417-B
- Zero set block is included, set zero before measurement
- Buttons: on/off,zero, mm/inch, ABS/INC measurement
- Automatically power off (time is adjustable)
- Data output (cable code:200-03 or 200-04)
- Stainless steel base



unit: mm

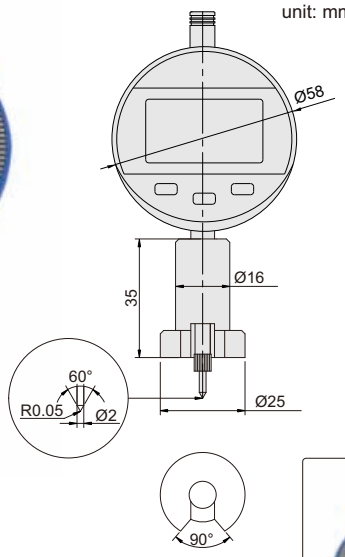

measure peak-to-valley height of blast cleaned surface

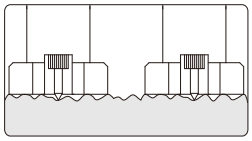

Set zero



Code	Range	Digital indicator stroke	Digital indicator resolution	Accuracy
489-010-02	0-12.7mm/0-0.5"	12.7mm/0.5"	0.001mm/0.00005"	±0.005mm

489 SURFACE PROFILE GAUGE

- Measure peak-to-valley height of blast cleaned surface.
  If the profile is too low, the adhesion of the coating to the surface will be reduced.
  If the profile is too high, it is dangerous that the profile peaks will remain non-coating, rust spots maybe occur.
- Meet ASTM D 4417-B
- Zero set block is included, set zero before measurement
- Stainless steel base



unit: mm

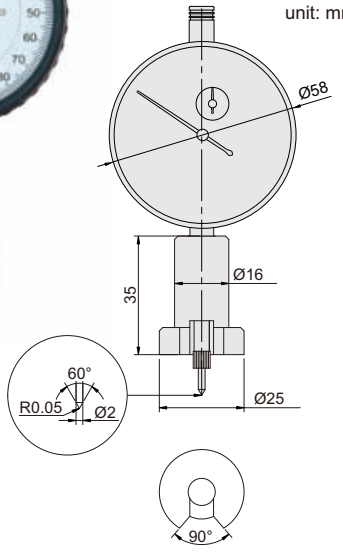

measure peak-to-valley height of blast cleaned surface

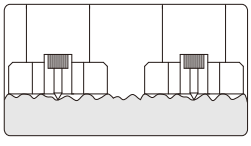

Set zero

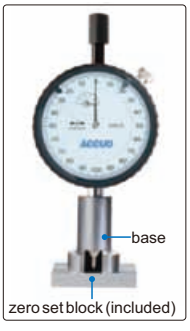

Code	Range	Dial indicator stroke	Dial indicator graduation	Accuracy
489-001-01	0-1mm	1mm	0.001mm	±0.005mm

RN1000 ROUNDNESS TESTER

- High precision air-floating spindle, never wear, can keep high accuracy for long time
- High accuracy and good stability
- Large arc can be measured
- Automatic identification of contour discontinuities, can eliminate automatically or manually



SPECIFICATION

Measuring range	**Max. dia.**	Ø180mm
	Min. inner dia.	Ø5mm
	Max. height	420mm
Spindle accuracy	**Radial error**	±(0.025+5H/10000)μm
	Axial error	±(0.02+6X/10000)μm
Stage	**Stage dia.**	Ø180mm
	Rotation dia.	Ø300mm
	Max. load weight	25kg
	Adjustment range	adjust the eccentricity: ±2mm; adjust the level:±1°
	Rotation speed	0-12 rpm(adjustable)
Horizontal arm	**Horizontal moving distance**	150mm
	Probe moving speed	0.5-6mm/s (adjustable)
Sensor	**Range**	500μm
	Resolution	0.005μm
	Stylus	Ø2mm ruby ball
	Measuring force	1-12g
Air source		0.45-0.80Mpa
Air consumption		0.2m³/min
Power supply		110~220V
Dimension		920x530x1600mm

INCLUDED ACCESSORIES

Main unit	1pc
Stage	1pc
Precision chuck	1pc
Standard ball	1pc
Standard elliptical part	1pc
Probe	1pc

OPTIONAL ACCESSORIES

Computer	1pc
Printer	1pc
Anti-dust cover	1pc

CR300 ROUNDNESS/CLINDRICITY TESTER

- High-precision air-floating spindle, never wear, long-term accuracy
- Data acquisition by high precision encoder with high accuracy and good stability
- Part of the arc can also be measured and processed
- Automatic identification of contour discontinuities, with automatic or manual elimination function



SPECIFICATION

Measuring range	Max. dia.	Ø380mm
	Min. inner dia.	Ø5mm
	Max. height	450mm
Spindle accuracy	Radial error	±(0.025+5H/10000)μm, H is the measuring height in mm
	Axial error	±(0.025+6X/10000)μm, X is diameter in mm
Parallelism between rotary Axis and Z-Axis guideway		2μm/300mm
Stage	Dia.	Ø200mm
	Rotation dia.	Ø400mm
	Load	30Kg
	Adjustment range	adjust the eccentricity ±2mm; adjust the level ±1°
	Spinning speed	0-12 rpm
Z axis	Straightess	0.5μm /100mm
	Straightess	0.8μm /300mm
Horizontal arm	Horizontal moving distance	160mm
	Probe moving speed	0.5-6mm/s (adjustable)
Sensor	Range	±500μm
	Resolution	0.005μm
	Stylus	Ø0.5/Ø1/Ø2mm ruby ball
	Measuring force	1-12g
Data acquisition		grating 7200 points/cycle
Magnification		maximum 200,000 times
Air source		0.45-0.80Mpa
Air consumption		≥0.2m³/min
Power supply		AC 220V±10% 50Hz
Dimension		960x650x1550mm

INCLUDED ACCESSORIES

Main unit	1pc
Stage	1pc
Precision chuck	1pc
Standard part	1pc
Ø0.5mm ruby ball	1pc

Ø1mm ruby ball	1pc
Ø2mm ruby ball	1pc
Software with USB dongle	1pc
Computer	1pc
Printer	1pc

SERISE CMM COORDINATE MEASURING MACHINES

FEATURES

- X&Z axis beam are made of aviation aluminum
- RENISHAW steel scale
- High precision, rigid, pre-loaded air bearings on all axis

RENISHAW UCC CONTROL SYSTEM

- High speed measurement & servo control system

RATIONAL-DMIS SOFTWARE

- Unique operation interface, complete drag-and-drop operation
- Instructional programming allows users to replace text
- Intelligent recognition of the construction, calculation and output of relevant geometric elements
- Seamless link with CAD data

RENISHAW PROBE BODY

- The TP20 is a touch trigger probe
- The TP200 is a touch triggered probe of electronic strain sensing technology, with high measurement accuracy and operate life
- The SP25M is high performance scanning and touch trigger probe



HIGH ACCURACY

Code	Range	Probe system		Accuracy			Weight	Maximum load capacity
		Head	Body	Mpee	Mpep	Mpethp		
CMM-H564A	500x600x400mm	PH10T	TP200	±(1.5+3L/1000)μm	1.7μm	/	790kg	500kg
CMM-H686A	600x800x600mm	PH10T	TP200				1560kg	700kg
CMM-H686B		PH10M	SP25M			2.7um/45s		
CMM-H8106A	800x1000x600mm	PH10T	TP200	±(1.7+3L/1000)μm		/	1980kg	1000kg
CMM-H8106B		PH10M	SP25M			2.7um/45s		
CMM-H8126A	800x1200x600mm	PH10T	TP200			/	2250kg	
CMM-H8126B		PH10M	SP25M			2.7um/45s		
CMM-H8156A	800x1500x600mm	PH10T	TP200			/	2550kg	
CMM-H8156B		PH10M	SP25M			2.7um/45s		

Code	Measuring range (X axis)	Measuring range (Y axis)	Measuring range (Z axis)	Resolution of measuring rulers	Speed of movement	Acceleration	Diameter of the calibration sphere
CMM-H564A	500mm	600mm	400mm	0.1μm	750mm/s	1800mm/s2	19mm
CMM-H686A	600mm	800mm	600mm		800mm/s	1900mm/s2	
CMM-H686B							
CMM-H8106A	800mm	1000mm					
CMM-H8106B							
CMM-H8126A		1200mm					
CMM-H8126B							
CMM-H8156A		1500mm					
CMM-H8156B							

SERISE CMM COORDINATE MEASURING MACHINES

STANDARD ACCURACY

Code	Range	Probe system		Accuracy			Weight	Maximum load capacity
		Head	Body	Mpee	Mpep	Mpethp		
CMM-S564A	500x600x400mm	MH20i	TP20	±(2.1+3.3L/1000)μm	2.2μm	/	790kg	500kg
CMM-S564B		PH10T						
CMM-S686A	600x800x600mm	MH20i	TP20	±(2.2+3.3L/1000)μm	2.3μm		960kg	700kg
CMM-S686B		PH10T						
CMM-S686C		PH10M	SP25M	±(1.9+3.3L/1000)μm	2.0μm	3.0um/45s		
CMM-S8106A	800x1000x600mm	MH20i	TP20	±(2.2+3.3L/1000)μm	2.3μm	/	1270kg	1000kg
CMM-S8106B		PH10T						
CMM-S8106C		PH10M	SP25M	±(1.9+3.3L/1000)μm	2.0μm	3.0um/45s		
CMM-S8126A	800x1200x600mm	MH20i	TP20	±(2.3+3.3L/1000)μm	2.4μm	/	1400kg	
CMM-S8126B		PH10T						
CMM-S8126C		PH10M	SP25M	±(1.9+3.3L/1000)μm	2.0μm	3.0um/45s		
CMM-S8156A	800x1500x600mm	MH20i	TP20	±(2.3+3.3L/1000)μm	2.4μm	/	1600kg	
CMM-S8156B		PH10T						
CMM-S8156C		PH10M	SP25M	±(1.9+3.3L/1000)μm	2.0μm	3.0um/45s		

Code	Measuring range (X axis)	Measuring range (Y axis)	Measuring range (Z axis)	Resolution of measuring rulers	Speed of movement	Acceleration	Diameter of the calibration sphere
CMM-S564A	500mm	600mm	400mm	0.5μm	750mm/s	1800mm/s2	19mm
CMM-S564B							
CMM-S686A	600mm	800mm	600mm				
CMM-S686B							
CMM-S686C							
CMM-S8106A	800mm	1000mm					
CMM-S8106B							
CMM-S8106C							
CMM-S8126A		1200mm					
CMM-S8126B							
CMM-S8126C							
CMM-S8156A		1500mm					
CMM-S8156B							
CMM-S8156C							

STYLI INCLUDED IN TP20 AND TP200

Material	Ball diameter	Length	Quantity
Materialruby ball / stainless steel stem	SØ1mm	10mm	1pc
	SØ2mm	20mm	
	SØ3mm	20mm	
		30mm	
	SØ4mm	10mm	
		30mm	
		40mm	
	SØ5mm	20mm	
		50mm	
Stainless steel stem	/	10mm	
		20mm	
		30mm	

STYLI INCLUDED IN SP25M

Material	Ball diameter	Length	Quantity
Materialruby ball / stainless steel stem	SØ2mm	21mm	2pc
	SØ3mm	21mm	
	SØ4mm	21mm	
	SØ2mm	30mm	
	SØ3mm	40mm	
	SØ4mm	50mm	
	SØ6mm	75mm	
Stainless steel stem	/	20mm	1pc

OPERATION ENVIRONMENT

Air pressure	0.5~1.0MPa
Air supply	0.3~0.45m^3/min
Temperature	20±2°C
Humidity	55%~65%
Power	220V±10%, 50/60Hz

STANDARD DELIVERY

Main unit		1 pc
Probe system	**Probe head (Renishaw)**	1 pc
	Probe body (Renishaw)	1 pc
	Styli (Renishaw)	1 set
Calibration sphere	**Ø19mm**	1 pc
Computer		1 pc
Printer		1 pc
Software		1 pc

PROBE HEAD SPECIFICATION

Probe head(PH10T)	**Angular movement with horizontal axis**	0°~105°in 7.5 steps
	Angular movement with vertical axis	±180°in 7.5 steps
	Number of positions	720
	Probe mounting	M8
	Max. output torque	0.45N.m
	Max extension length	300mm
	Weight	645g
Probe body	**Detect direction**	±X, ±Y, ±Z
	Styli mounting	M2
	Rating life	>1000,000 times

CN/CF/CFN1500 COATING THICKNESS GAUGE

Certificate | Data output | AAA

- F type probe is used to measure the thickness of non-magnetic coatings (zinc, copper, enamel, plastic and so on) on magnetic subtracts (iron, steel)
  N type probe is used to measure the thickness of non-conductive coatings (varnish ,enamel, plastic and so on) on conductive subtracts (zinc, copper, aluminum)
- External interchangeable probe
- Single and continuous working mode
- Low and high limits setting with judgement
- With average calculation
- With comparison measurement function
- With temperature compensation
- Turn off automatically
- With manufacturer inspection certificate

VIDEO



CN1500

SPECIFICATION

Code	CF1500H	CF1500	CN1500	CFN1500
Probe type	F		N	F and N
Range	0~1500μm			
Accuracy	2μm (0~100μm)			
	2%(100~1500μm)			
Resolution	0.1μm (0~999μm)			
	1μm (1000~1500μm)			
Memory	500			
Working temperature	-10°C~150°C	-10°C~50°C		
Power	3×AAA batteries			
Dimension(L×W×H)	150×50×29mm			
Weight	170g			

INCLUDED ACCESSORIES

Main unit	1pc
Calibration foil	1set
Calibration base	1set
USB cable	1pc
AAA battery	3pcs

CN/CF/CFN1000S COATING THICKNESS GAUGE (BASIC TYPE)

Certificate AA

- F type probe is used to measure the thickness of non-magnetic coatings (zinc, copper, enamel, plastic and so on) on magneticsubtracts (iron, steel)
  N type probe is used to measure the thickness of non-conductive coatings (varnish ,enamel, plastic and so on) on conductive subtracts(zinc, copper, aluminum)
- External interchangeable probe
- Low and high limits setting with judgement
- With average/Max/Min. calculation
- Turn off automatically
- With manufacturer inspection certificate

VIDEO



CN1000S



probe for bores and grooves
(Code:CF1000S-F90)



probe for large range
(Code:CF1000S-F10)

SPECIFICATION

Code	CF1000S	CN1000S	CFN1000S
Probe type	F	N	F and N
Range	0 ~ 1250μm		
Accuracy	3μm (0 ~ 50μm)		
	3%+1μm (50 ~ 1250μm)		
Resolution	0.1μm (0 ~ 999μm)		
	1μm (1000 ~ 1250μm)		
Memory	500		
Power	2xAA batteries		
Dimension(LxWxH)	128x68x32mm		
Weight	340g		

INCLUDED ACCESSORIES

Main unit	1pc
Calibration foil	1set
Calibration base	1set
USB cable	1pc
AA battery	2pcs

OPTIONAL ACCESSORIES

Magnetic induction probe for bores and grooves	CF1000S-F90
Magnetic induction probe for large range (500**μm**-10mm)	CF1000S-F10

CF/CN1250 COATING THICKNESS GAUGE

Certificate AAA

- F type probe: measure the thickness of non-magnetic coatings (zinc, copper, enamel, plastic and so on) on magnetic subtracts (iron, steel)
  N type probe: measure the thickness of non-conductive coatings (varnish ,enamel, plastic and so on) on conductive subtracts (zinc, copper, aluminum)
- V-type probe to measure the cylinder easier
- Single and continuous working mode
- Low and high limits setting with judgement
- With average calculation function

VIDEO



CF1250

SPECIFICATION

Code	CF1250	CN1250
Probe type	F	N
Range	0~1250μm	
Accuracy	2μm(0~100μm)	
	2%(100~1250μm)	
Resolution	0.1μm (0~999μm)	
	1μm (1000~1250μm)	
Memory	500	
Power supply	3xAAA batteries	
Dimension(L×W×H)	150×50×29mm	
Weight	170g	

INCLUDED ACCESSORIES

Main unit	1pc
Calibration foil	1set
Calibration base	1pc
AAA battery	3pcs

CFN1500B COATING THICKNESS GAUGE

Certificate AAA

- Integrated F and N type probe
- F type probe is used to measure the thickness of non-magnetic coatings (zinc, copper, enamel, plastic and so on) on magnetic subtracts (iron, steel)
  N type probe is used to measure the thickness of non-conductive coatings (varnish, enamel, plastic and so on) on conductive subtracts (zinc, copper, aluminum)
- Large display screen
- V-type probe to make the cylinder measurement easier
- With um/mil unit conversion
- Automatic power on/ off
- With back light
- With manufacturer inspection certificate

VIDEO



SPECIFICATION

Range	0~1500μm
Accuracy	2μm(0~100μm)
	3%(100~1500μm)
Resolution	0.1μm (0~99.9μm)
	1μm (100~1500μm)
Min. measuring area	25×25mm
Min. curvature	convexity: 5mm; concave: 30mm
Min substrate thickness	magnetic material: 0.2mm; non magnetic material: 0.05mm
Memory	30 sets
Power supply	AAA batteries
Dimension(L×W×H)	120×52×26mm
Weight	170g

INCLUDED ACCESSORIES

Main unit	1pc
Calibration foil	1set
Calibration base	1set
AAA battery	2pcs

SERIES CFN COATING THICKNESS GAUGE

- Integrated F and N type probe
- F type probe is used to measure the thickness of non-magnetic coatings (zinc, copper, enamel, plastic and so on) on magnetic subtracts (iron, steel)
  N type probe is used to measure the thickness of non-conductive coatings (varnish, enamel, plastic and so on) on conductive subtracts (zinc, copper, aluminum)
- Adjusting the display direction automatically
- With um/mil unit conversion
- Automatic power on/ off
- With back light
- With manufacturer inspection certificate

VIDEO



CFN3500B

SPECIFICATION

Code	CFN3500B	CFN5000B	CFN10000B
Range	0~3500μm	0~5000μm	0~10000μm
Accuracy	2μm(0~100μm)		
	2+3%(≥100μm)		
Resolution	0.1μm/1μm/10μm		
Min. measuring area	25×25mm		
Min. curvature	convexity: 5mm; concave: 25mm		
Min substrate thickness	magnetic material: 0.2mm; non magnetic material: 0.05mm		
Memory	100 sets		
Power supply	AA batteries		
Dimension(L×W×H)	112×63×29mm		
Weight	85g		

INCLUDED ACCESSORIES

Main unit	1pc
Calibration foil	1set
Calibration base	1set
AA battery	2pcs

SERIES 740 WET FILM GAUGE

- Made of stainless steel

package





740-300-01

unit: mm

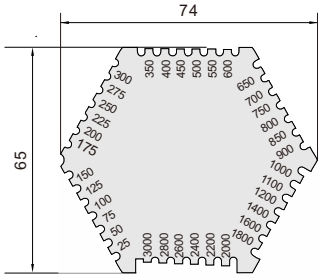



740-800-11

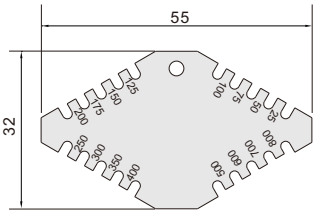

Code	Range	Accuracy	Thickness
740-800-11	25-800μm	±5μm	1.8mm
740-300-01	25-3000μm	25μm-100μm:±5μm 100μm-3000μm:±5%	1mm

750 ROLLER WET FILM THICKNESS GAUGE

- Suitable for wet film thickness measurement
- Made of stainless steel





unit: mm

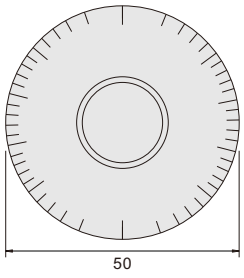

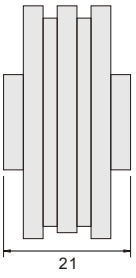

Code	Range	Graduation	Accuracy
750-050-11	0-50μm	2μm	±2μm

ST100A ULTRASONIC THICKNESS GAUGE

VIDEO Certificate Charge

- Measure the thickness of tank, pipe and big workpiece
- LCD with backlight
- With manufacturer inspection certificate



SPECIFICATION

Measuring range	1.2-225mm(steel)
Resolution	0.01mm(<100mm)
	0.1mm(≥100mm)
Repeatability	0.05mm(<100mm)
	0.1mm(≥100mm)
Accuracy	±0.5%L+0.04mm L is the thickness in mm
Velocity	1000-9999m/s
Min.measured tube	Ø20×3mm
Power	rechargeable battery
Dimension	64×116×27mm
Weight	220g

INCLUDED ACCESSORIES

Main unit	1pc
Transducer	1pc
Battery	1 set
Couplant	1 bottle
Brush	1pc

ST200 ULTRASONIC THICKNESS GAUGE

Certificate | AAA | Data output

- Measure the thickness of tank, pipe and big workpiece
- LCD with backlight
- With manufacturer inspection certificate

VIDEO





Transducer **PT-06** **(optional)**



Transducer **ZT-12** **(optional)**



Transducer **GT-12** **(optional)**

SPECIFICATION

Resolution	0.01mm(<100mm)
	0.1mm(≥100mm)
Repeatability	0.03mm(<100mm)
	0.1mm(≥100mm)
Accuracy	±0.04mm (<10mm) ±(0.04+H/1000)mm (10~100mm) ±H/333mm (≥100mm) H is the thickness in mm
Velocity	1000-9999m/s
Power	3×AAA batteries
Dimension	69×150×29mm
Weight	220g

INCLUDED ACCESSORIES

Main unit	1pc
Transducer PT-08	1pc
AAA battery	3pcs
Couplant	1bottle
USB cable	1pc

OPTIONAL ACCESSORIES

Transducer	**PT-06, ZT-12, GT-12**

SPECIFICATION OF TRANSDUCERS

Code	Application	Range	Frequency	Min. pipe dimension diameter×thickness	Working temperature
PT-08	general use	0.8-300mm	5.0MHz	20×1.2mm	<60°C
PT-06	thin workpiece	0.75-40mm	7.5MHz	15×1.2mm	<60°C
ZT-12	casting steel	2-400mm	2.0MHz	30×4mm	<60°C
GT-12	high temperature	3-100mm	5.0MHz	25×3mm	<310°C

ST300 ULTRASONIC THICKNESS GAUGE

Certificate AA

- Measure the thickness of tank, pipe and big workpiece
- Can measure thickness of workpiece with coating
- Wide measuring range with optional transducer
- LCD with backlight
- With manufacturer inspection certificate

VIDEO





Transducer **ST300-P6** **(optional)**



Transducer **ST300-ZT12** **(optional)**



Transducer **ST300-GT12** **(optional)**

SPECIFICATION

Resolution	0.01mm(<100mm)
	0.1mm(≥100mm)
Repeatability	0.03mm(<100mm)
	0.1mm(≥100mm)
Accuracy	±0.05mm (<10mm) ±(0.05+H/100)mm (≥100mm) H is the thickness in mm
Max. coating thickness	1000um
Velocity	1000-9999m/s
Power	2×AA batteries
Dimension	71×150×33mm
Weight	160g

INCLUDED ACCESSORIES

Main unit	1pc
Transducer PT-10	1pc
AA battery	2pcs
Couplant	1bottle

OPTIONAL ACCESSORIES

Transducer	**ST300-P6**
Transducer	**ST300-ZT12**
Transducer	**ST300-GT12**
Couplant (high temperature)	**ST300-CP**

SPECIFICATION OF TRANSDUCERS

Code	Application	Range	Frequency	Min. pipe dimension diameter×thickness	Working temperature
PT-10	general use	1-300mm	5.0MHz	20×1.2mm	<70°C
ST300-P6	thin workpiece	0.75-35mm	7.0MHz	15×1.2mm	<70°C
ST300-ZT12	casting steel	4-500mm	2.0MHz	30×5mm	<70°C
ST300-GT12	high temperature	4-80mm	5.0MHz	25×5mm	<480°C

MST2000 EMAT THICKNESS GAUGE

Certificate

LI-ION

- Used to test the thickness of metal workpiece
- Can measure the workpiece with thick coating
- Wide range: up to 2000mm for steel
- Don't need any couplant
- The probe with magnetic
- Automatic power off



Stand block(aluminium)



Stand block(steel)



Application

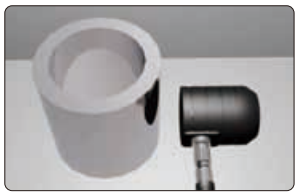

SPECIFICATION

Max. range for steel	2000mm
Max.coating thickness or air gap range	up to 6mm (depending on the object characteristics)
Accuracy	0.02mm
Units	mm/inch
Resolution	0.01mm
Type of ultrasonic wave	transverse
Gain range	0-96 dB
Ultrasound velocity adjustment	400-9999m/s
Frequency averaging signal	100-1000Hz
Measurement methods	A-scan/B-scan/Echo/Echo Echo (Dual Echo)/Peak peak/Front
Output	USB
Min. area to be measured	Ø30mm
Working temperature	0- 40° C
Standard	ASTM E797/IS0 16809:2017/EN 14127/EN15317/EN12668-1
Power supply	Built-in Li-ion battery
Weight	250g
Dimensions (L x W x H)	153x76x37mm

INCLUDED ACCESSORIES

Main unit	1pc
MST2000-ST Probe	1pc
Stand block	2pcs
AC/DC adapter	1pc

SPECIFICATION OF PROBES

Code	Application	Min. area(diameter)	Working temperature
MST2000-ST	general use	30mm	0-40°C
MST2000-SM	small workpiece	13mm	0-40°C
MST2000-GT	high temperature	33mm	0-800°C

SERIES STB STANDARD TEST BLOCK FOR ULTRASONIC THICKNESS GAUGE

- Material of step wedge blocks can be customized
- Accuracy: ±0.02mm
- Steel material: 45#



STB-4B

unit:mm

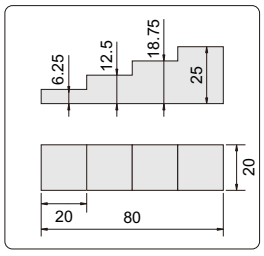

STB-4A

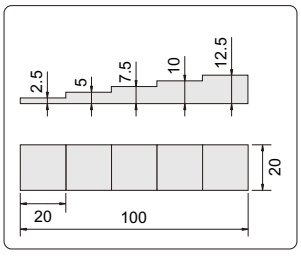

STB-5A

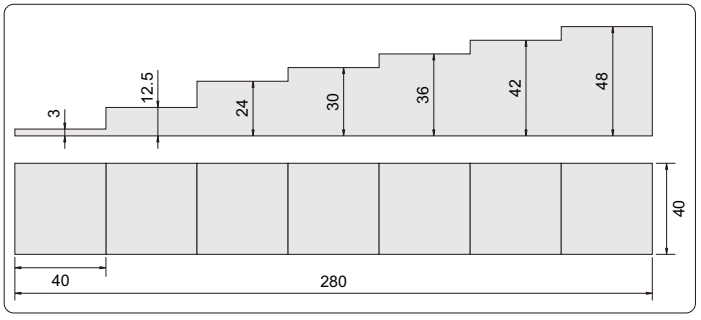

STB-7A

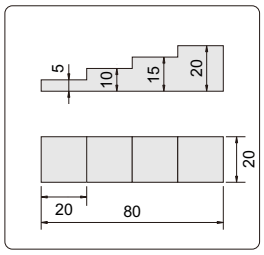

STB-4B

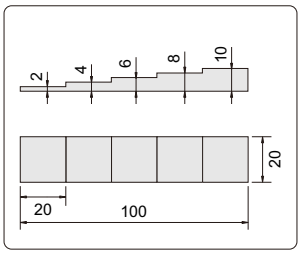

STB-5B

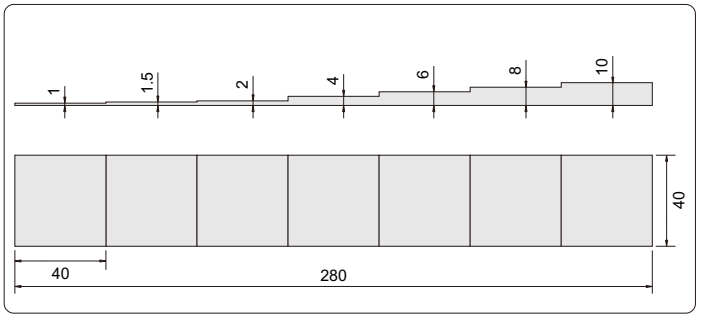

STB-7B

TM40/100B LASER DISTANCE METER

AAA

- Economic type
- With a level in the body
- With distance, area, volumn and height measurement function
- With Max, Min measuring function
- With backlight
- Power off automatically

VIDEO



TM40

SPECIFICATION

Code	TM40	TM100B
Measuring range	0.1m-40m	0.1m-100m
Accuracy (at the prefect reflection surface)	2mm	
Resolution	1mm	
Unit	m/inch/ft	
Light spot	Φ8mm@40m	
Memory	20	
Power supply	2x1.5V AAA batteries	
Laser	635nm<1mW	
Dimension	120×54×30 mm	
Weight	110g	

INCLUDED ACCESSORIES

Main unit	1pc
Battery	2pcs

TM50R/100R LASER DISTANCE METER

Charge

- With digital level
- With distance, area, volumn and height measurement function
- With Max, Min measuring function
- With backlight
- With calibration function
- Power off automatically: laser 20s, main unit 150s



TM50R

SPECIFICATION

Code	TM50R	TM100R
Measuring range	0.1m-50m	0.1m-100m
Accuracy (at the prefect reflection surface)	±(2+D/10,000)mm, D: measured distance, unit: mm	
Resolution	1mm	
Unit	m/inch/ft	
Light spot	Φ8mm@40m	
Level range	±90°	
Memory	99	
Power supply	rechargeable battery(type-C)	
Laser	630-670nm<1mW	
Dimension	112×50×25 mm	
Weight	200g	

INCLUDED ACCESSORIES

Main unit	1pc
Reflection plate	1pc

TM1200 LASER DISTANCE METER

IP54 Charge

- IP54 protection
- Can measure distance, angle and speed
- Power off automatically



Distance, angle measurement

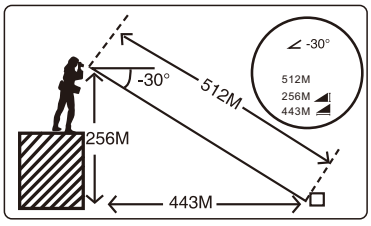

Speed measurement

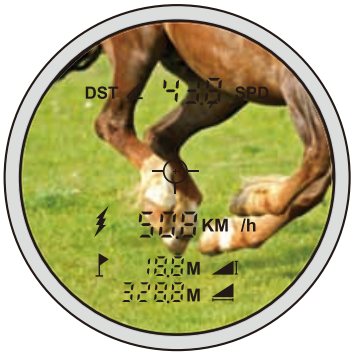

SPECIFICATION

Measuring range	3m-1500m
Magnification	8X
View field	7°
Distance measuring accuracy	±1m
Speed measuring accuracy	±5km/h
Power supply	Rechargeable battery(for 30000 times)
Laser	635nm<1mW
Dimension	104×77×41 mm
Weight	197g

INCLUDED ACCESSORIES

Main unit	1pc
USB cable	1pc

TM60T LASER DISTANCE METER WITH MEASURING TAPE

AAA



- Measure by tape or laser
- With backlight
- Automatic power off: laser 20s, main unit 150s
- Can work continuously for 8000 times

Laser distance meter



SPECIFICATION

Laser distance meter	**range**	0.1-60m
	resolution	0.001m
	accuracy	±(2+D/10,000)mm, D: measured distance, unit: mm
	units	m, ft, in
	laser type	635nm,<1mW,class 2
	measurement function	single, continuous
Measuring tape	**range**	5m
	graduation	1mm
	thickness	0.16mm
	blade width	19mm
	horizontal stand-out	⩾2m
Operation temperature		0~40°C
Storage temperature		-20~60°C
Power supply		2xAAA
Dimension(LxWxH)		88x64x78mm
Weight		350g

MTT3600 X-RAY FLUORESCENCE SPECTROMETER

- Fast and non-destructive test to identify alloy grade and composition
- For all kinds of high and low temperature alloy steel, stainless steel, tool steel, chromium/molybdenum steel, nickel alloy, cobalt alloy, nickel/cobalt heat resistant alloy, titanium alloy
- Can measure the coating thickness like PCB, range: 0.01-30μm
- IP54 dust/waterproof

VIDEO





SPECIFICATION

Excitation source	50KV/200μA; Ag target, integrated end window, micro X-ray tube and high voltage power supply, matching power ≥4W
Detector	Si-PIN, window area 25mm²
Elemental analysis range	Ti, V, Cr, Mn, Fe, Co, Ni, Cu, Zn, Se, Zr, Nb, Mo, Rh, Pd, Ag, Cd, Sn, Sb, Hf, Ta, W, Re, Pb, Bi
Alloy analysis mode	automatically identify alloy grade/alloy material qualified test mode
Collimator filter	7 groups
Display	5-inch LCD touch screen
Analysis	3-60 sec (adjustable)
Memory	built-in 64G, storage data, >500000 groups
Data transmission	built-in WIFI, U disk, blue-tooth (support blue-tooth printer)
Data export format	EXCEL, BMP, PDF, CSV
Battery	6800mAh lithium battery, for 8 hours working time
Air pressure compensation	built-in pressure measurement module for system compensation and correction
System	Win-IOT operation system
Work environment	temperature: 0~40°C, relative humidity: 10%~90%
Dimension	250×320×80mm
Weight	1900g

INCLUDED ACCESSORIES

Main unit	1pc
Charger	1pc
Battery	2pcs
Test film	1pc
Sample with cup	1pc
Protection support (including calibration silver)	1pc
USB cable	1pc

HTC-1 TEMPERATURE METER

AAA

VIDEO



SPECIFICATION

Temperature range	-20˚C-60˚C
Temperature accuracy	1%
Temperature resolution	0.1 ˚C
Humidity range	10%RH-99%RH
Humidity accuracy	5%
Humidity resolution	1%
Power supply	AAA battery
Dimension	98×106×20 mm
Weight	50g

INCLUDED ACCESSORIES

Main unit	1pc
Battery	1pc

HTC-70 TEMPERATURE METER

IP67 AAA

- External probe
- Probe is IP67 protection level, can measure the water temperature in fish tank



SPECIFICATION

Temperature range	-5˚C-70˚C
Temperature accuracy	±1 ˚C
Temperature resolution	0.1 ˚C
Humidity range	10%RH-99%RH
Humidity accuracy	5%
Humidity resolution	1%
Power supply	AAA battery
Dimension	98×120×21 mm
Weight	60g

INCLUDED ACCESSORIES

Main unit	1pc
Battery	1pc

HTC-COS03 TEMPERATURE AND HUMIDITY METER WITH DATA LOGGER

Blue tooth | Data output | Charge

- 260,000 memory for long-term logging
- Low and high limits setting with judgement
- Temperature and humidity can be re-calibrated
- Software is included, can export to PDF, Excel
- With blue-tooth, can connect mobile (Android OS)



HTC-COS03

SPECIFICATION

Code	HTC-COS03	HTC-COS03B
Probe	internal	external
Temperature range	-20°C~60°C/-4°F~140°F	-40°C~80°C/-40°F~176°F
Temperature accuracy	±0.3°C/±0.6°F	
Temperature resolution	0.1°C/0.1°F	
Humidity range	0%RH~100%RH	
Humidity accuracy	±3%RH	
Humidity resolution	0.1%RH	
Memory size	260,000	
Sampling interval	2s~255s(adjustable)	
Logging interval	5s~18h(adjustable)	
Logging start mode	key operation/time-lapse start/timing start	
Logging end mode	key operation/Full/timing end	
Interface	Micro USB (type C)	
Power supply	3.7V rechargeable lithium battery	
Dimension(WxDxH)	120x33x113mm	
Weight	209g	

OTC convertor



Hook

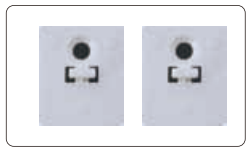

INCLUDED ACCESSORIES

Main unit	1pc
Software and USB cable	1pc
Hook	1pair
OTC convertor	1pc

Software (included), download data to PC software via USB cable and save the data as XLS, TXT, PDF format (cannot display data in real time)

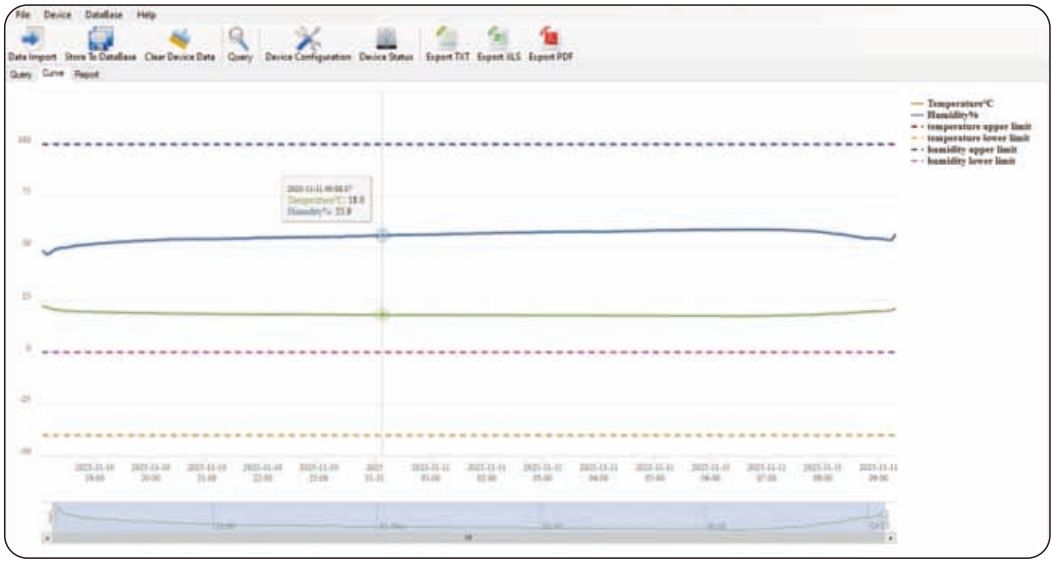

HTC-300 TEMPERATURE METER FOR FOOD

CR2032

- Used the measure the temperature inside of food
- With magnet on the back
- Automatic power on/off
- With calibration function





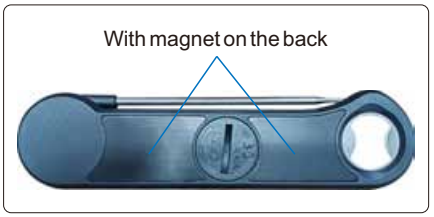

Temperature range	-50°C-300°C(-58°F-572°F)
Temperature accuracy	0.8°C(0-150°C)
Temperature resolution	0.1 °C/ 0.1°F
Max. protrusion depth	110mm
Power supply	CR2032
Dimension	164×42×20 mm
Weight	100g

INCLUDED ACCESSORIES

Main unit	1pc
CR2032 Battery	1pc

IT700/IT1650S INFRARED THERMOMETER

9V

- For quick measuring remote temperature
- Easy to operate

VIDEO



IT700

SPECIFICATION

Code	IT700	IT1650S
Measuring temperature range	-50°C-950°C	-50°C-1650°C
Accuracy	1.5°C(<75°C)/2%(75–500°C)/3%(>500°C)	
Repeatability	0.5 °C or 1%	
Distance spot ratio	12:1	50:1
Response time	500ms	
Resolution	0.1 °C	
Power supply	9V battery	
Emissivity	0.1-1.00 (adjustable)	
Dimension	186×119×50 mm	225×160×66 mm
Weight	185g	320g

INCLUDED ACCESSORIES

Main unit	1pc
Battery	1pc

ITC450 INFRARED THERMAL IMAGING CAMERA

WIFI IP54 Charge

- Trigger button for taking pictures
- The IR image can be mixed with visible image
- Built-in 5000mA rechargable battery
- With USB/ WIFI data output interface
- With measuring software
- Menu in Chinese, English, Spanish, French, Japanese, Korean, Russian, Arabian



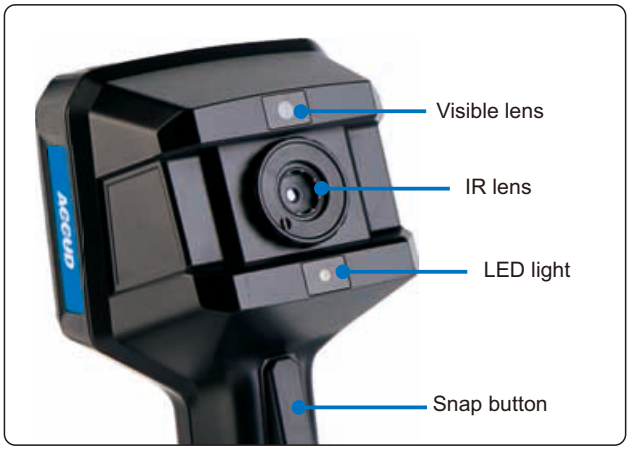

SPECIFICATION

IR image	Resolution	220x160
	Measuring range	-10ºC - 450ºC
	Accuracy	±2ºC(<100ºC), 2%(≥100ºC)
	Detector	8-14um
	Frame rate	9Hz
	Field of view	Horizontal :56º, vertical:42º
	Lens	Ø4mm
	Measuring method	Max, Min, center spot and average
	Emissivity	0.1-1(adjustable)
	Color palettes	8 types
Visible camera	Resolution	640x480
	Frame rate	25Hz
	Illumination	LED
Screen size		3.5 inch
Image		outline fusion, overlay fusion, picture in picture, IR image, visible
Data output		USB/WIFI
Image storage		8G, can save 20,000 pictures
Image format		TIFF
Working temperature		-10ºC-50ºC
Protection level		IP54
Power supply		Rechargable battery, for 5 hours working
Size		230×100×90mm
Weight		420g

INCLUDED ACCESSORIES

Main unit	1pc
USB cable and software	1pc

DMT600 DIGITAL MULTIMETER

9V

- With protective case
- With backlight
- With low battery indicator
- Safety rating: CAT III 600V



test leads (included)



SPECIFICATION

Function	Range	Resolution(d)	Accuracy
DC Voltage	200mV/2V/20V/200V	0.1mV/1mV/10mV/100mV	±(0.5%+4d)
	600V	1V	±(1%+5d)
AC Voltage	200V/600V	100mV/1V	±(1.2%+10d)
DC Current	2mA/20mA/200mA	1μA/10μA/100μA	±(1.5%+3d)
	10A	100mA	±(2%+5d)
Resistance	200Ω	0.1Ω	±(1%+5d)
	2kΩ/20kΩ/200kΩ	1Ω/10Ω/100Ω	±(0.8%+3d)
	2MkΩ	1kΩ	±(1%+15d)
Diode test	open circuit voltage 2.8V DC		
Continuity check	<50Ω		
Power supply	9V battery		
Dimension	150×75×50 mm		
Weight	325g		

INCLUDED ACCESSORIES

Main unit	1pc
9V battery	1pc
Test lead	2pcs

DCM600 DIGITAL AC/DC CLAMP METER

AAA

- 35mm open size
- With data hold function
- With low battery indicator
- Safety rating: CAT III 600V



test leads (included)



SPECIFICATION

Function	Range	Resolution(d)	Accuracy
AC Current	2A	1mA	±(2.5%+20d)
	20A	10mA	±(2.5%+5d)
	200A	100mA	±(2.5%+8d)
	400A	1A	±(2.5%+8d)
	600A	1A	for reference
DC Voltage	600V	1V	±(1.5%+5d)
AC Voltage	600V	1V	±(1.5%+5d)
Resistance	2000KΩ	10KΩ	±(1.2%+3d)
Continuity check	<30Ω		
Power supply	2×AAA batteries		
Dimension	195×48×30 mm		
Weight	380g		

INCLUDED ACCESSORIES

Main unit	1pc
AAA battery	2pcs
Test lead	2pcs

WMM700 WOOD MOISTURE METER

AAA

- For quick measuring wood moisture
- Easy to operate

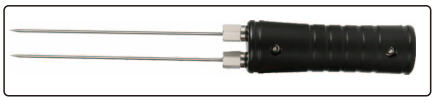

Extension probe **(Optional)**



SPECIFICATION

Moisture	**Measuring range**	2-40%/50%/60%/70%(for different wood)
	Accuracy	±1%+0.5
	Resolution	0.5 %
Temperature	**Measuring range**	-10 ˚C–60˚C
	Accuracy	±1%
	Resolution	0.1 ˚C
Humidity	**Measuring range**	20%RH-95%RH
	Accuracy	±5% RH
	Resolution	0.1% RH
Power supply		2 ×AAA
Dimension		136×55×60mm
Weight		107g

INCLUDED ACCESSORIES

Main unit	1pc
Battery	2pcs

OPTIONAL ACCESSORIES

Extension probe	**WMM700-EP**

WMM900 CONCRETE MOISTURE METER

AAA

- Use high frequency electromagnetic wave method to measure wall or concrete moisture
- Different density can be selected according to different building materials, increase the accuracy

Measure wall moisture



Measure concrete moisture





SPECIFICATION

Measuring range	0-40%
Accuracy	±2%
Resolution	0.5 %
Working temperature	0 °C-40°C
Power supply	3 ×AAA
Dimension	132×67×26mm
Weight	95g

INCLUDED ACCESSORIES

Main unit	1pc
Battery	3pcs

LT900 LASER TACHOMETER

AAA

- With back light
- Real-time/ Max/Min/avarage measurement
- Can review the last measuring value

VIDEO



SPECIFICATION

Measuring range		2.5-99999rpm
Resolution	**＜1000rpm**	0.1rpm
	≥1000rpm	1rpm
Accuracy	**＜1000rpm**	±(0.1%+5d)rpm, d is resolution
	≥1000rpm	±(1%+5d)rpm, d is resolution
Measuring distance		50-500mm
Power supply		2x1.5V AAA batteries
Dimension		56×30×127 mm
Weight		106g

CT900 CONTACT TYPE TACHOMETER

AAA

PORTABLE

- Measure rotary speed, line speed
- With back light
- Real-time/ Max/Min/avarage measurement
- Can review the last measuring value


wheel


clamping sleeve


small cone


cone


cone cavity



SPECIFICATION

Range	**rotary speed**	0.5-19999rpm
	line speed	0.05-1999.9m/min
Resolution(d)	**rotary speed**	0.1rpm (＜1000rpm), 1rpm (≥1000rpm)
	line speed	0.01m/min (＜100m/min), 0.1m/min (≥100m/min)
Accuracy	**rotary speed**	±(0.5%+d)rpm(＜300rpm)
		±(0.05%+d)rpm(≥300rpm)
	line speed	±(0.1%+d)m/min
Sampling time		0.8s (above 60rpm)
Power supply		2x1.5V AAA battery
Dimension		55×33×158 mm
Weight		106g

INCLUDED ACCESSORIES

Main unit	1pc
Accessories (5 types)	1pc.each
AAA battery	2pcs

DS40K DIGITAL TACHOMETER/STROBPSCOPE

Charge

- Used to measure the rotation and vibration speed
- With back light
- With fine and coarse adjustment



SPECIFICATION

Measuring range		60~40000rpm
Resolution	**<400rpm**	0.01rpm
	400-4000rpm	0.1rpm
Accuracy	**≥4000rpm**	1rpm
	≥1000rpm	±0.05%rpm
Memory		10
Power supply		Lithium ion rechargeable batteries
Dimension		195×73×38 mm
Weight		220g

VT63C VIBRATION TESTER

9V

- Measure the motor, fan, compressor and measuring tools vibration
- Power off automatically



SPECIFICATION

Range	**Speed**	0.1-199.9m/s (frequency range:10-1KHz)
	Accelerated speed	0.1-199.9m/s^2 (frequency range: 10-15KHz)
	Displacement	0.001-1.999mm (frequency range:10-1KHz)
Accuracy		±5%+2 digit
Power supply		9V battery
Operation temperature		0-40˚C
Operation humidity		30-90%
Dimension		185x68x30mm
Weight		150g

INCLUDED ACCESSORIES

Main unit	1pc
Battery	1pc

SERIES VT63 PEN TYPE VIBRATION TESTER

Charge

- Measure the motor, fan, compressor and measuring tools vibration
- Power off automatically
- Pocket size

VIDEO



VT63

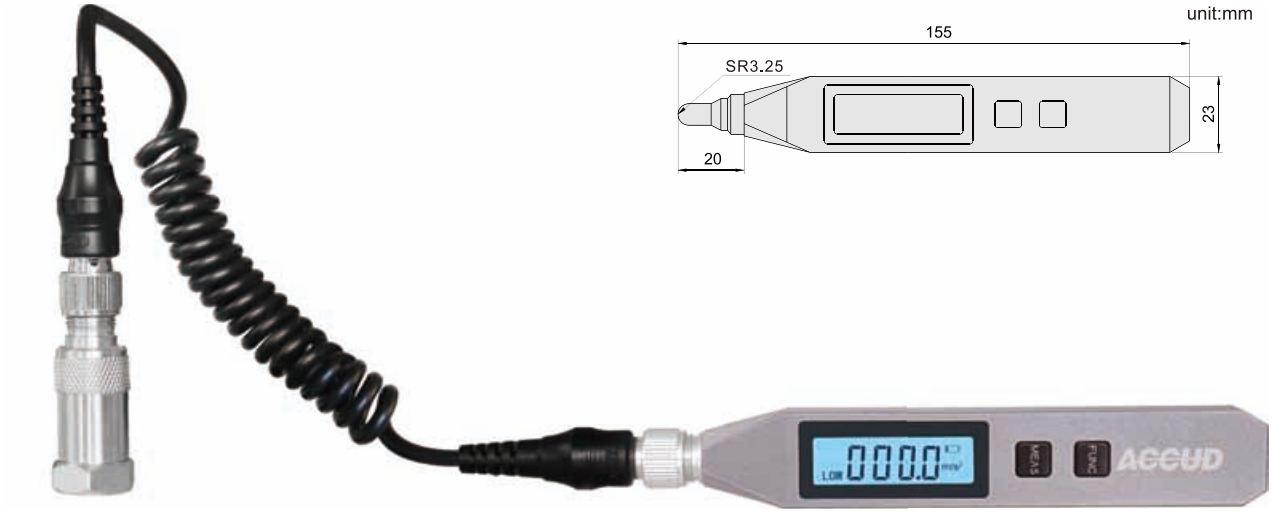

VT63B

SPECIFICATION

Code		VT63	VT63B
Probe		integrated	separated
Range	Speed	0.1-199.9m/s (frequency range:10-1KHz)	
	Accelerated speed	0.1-199.9m/s^2 (frequency range: 10-15KHz)	
	Displacement	0.001-1.999mm (frequency range:10-500Hz)	
Accuracy		±5%+2 digit	
Power supply		rechargeable battery	
Operation temperature		0-40˚C	
Operation humidity		0-90%	
Dimension		152x23x12mm	
Weight		75g	

INCLUDED ACCESSORIES

Main unit	1pc
Charger	1pc

LM100 LIGHT METER

AAA

- Unit: LUX/FC
- Max/Min/avarage measurement
- With data hold function
- Power off automatically



SPECIFICATION

Range	0.1-200000LUX/0.01-20000FC
Accuracy	±(6%+d) d is resolution
Resolution	0.1LUX (＜1000), 1LUX (≥1000)
Temperature range	0-60°C
Temperature accuracy	2°C
Sampling time	8 times/s
Repeatability	±2%
Light wavelength range	400-700nm
Power supply	2xAAA batteries
Dimension	152×55×33 mm
Weight	136g

INCLUDED ACCESSORIES

Main unit	1pc
AAA battery	2pcs

LL030 LASER LEVEL

IP54 AA

- 2 lines(cross line)
- With auto-level mode



SPECIFICATION

Laser beam	green
Leveling range	4°±1°
Leveling accuracy	±3mm/10m
Horizontal/vertical accuracy	±3mm/10m
Laser class	Class II
Laser wavelength	510-530nm
Working distance(Line)	30m
Protection level	IP54
Power supply	2×AA
Operation temperature	-10°C- 50°C
Dimension	66x75x76mm
Weight	255g

INCLUDED ACCESSORIES

Main unit	1pc
Stand	1pc
Battery	2pcs



Stand

LL025/325/525 LASER LEVEL

Charge

- With auto-level mode

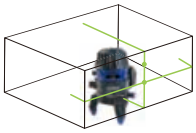
cross line

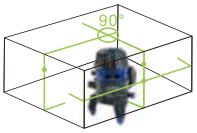

3 lines

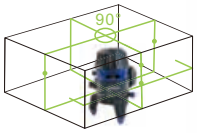

5 lines

SPECIFICATION

Code	LL025	LL325	LL525
Laser beam	cross line	3 lines	5 lines
Laser beam color	green		
Leveling range	<3°		
Leveling accuracy	±1mm/7m		
Horizontal/vertical accuracy	±1mm/7m		
Laser class	Class II		
Laser wavelength	635-650nm		
Max.working distance(Line)	30m		
Line width	3mm@10m		
Power supply	rechargeable battery		
Operation temperature	-10°C-50°C		
Dimension	115x115x200mm		
Weight	1kg		



LL025

INCLUDED ACCESSORIES

Main unit	1pc
Battery	2pcs
AC/DC adapter	1pc

OPTIONAL ACCESSORIES

Stainless steel stand	LL025-ST

Stand(optional)



SLM130 DIGITAL SOUND LEVEL METER

9V

- Fast(2 time/sec) /slow(1 time/sec) display
- With back light
- Real-time and Max/Min measurement
- High limits setting with judgement and alarm

VIDEO



SPECIFICATION

Measuring sound range	30-130db
Accuracy	1.5db
Resolution	0.1db
Power supply	9V battery
Dimension	143×56×35 mm
Weight	64g

AM30 DIGITAL ANEMOMETER

9V

- With temperature display
- With back light
- Real-time/ Max/Average measurement
- Unit: m/s, km/h, ft/min, Knots, mph

VIDEO



SPECIFICATION

Measuring range	0.3-30m/s
Accuracy	±5%
Resolution	0.1m/s
Power supply	9Vbattery
Dimension	155×56×35 mm
Weight	154g

PH12 PEN-TYPE PH METER

AAA

- Measure PH value and temperature
- Automatic temperature compensation
- Temperature unit conversion function
- Used for PH measurements like water or paper
- Waterproof button, more than 20,000 press times working life
- Calibration method can be selected for multi-point calibration or single-point calibration
- Electrode loss can be viewed for timely replacement of the electrode head
- ASTM and European standard are available
- Automatic power off



SPECIFICATION

PH range	-2.00~+16.00PH
PH accuracy	±0.01PH
Temperature measuring range	0-100.0°C/32-212°F
Type of electrode	Bubble electrodes
Display	LCD screen with backlight
Power supply	2×AAA batteries
Working temperature	0-60.0°C/32-140°F
Dimension	Ø39×180
Weight	108g

INCLUDED ACCESSORIES

Main unit	1pc
Battery	2pcs
PH buffer powder	3pcs

PH210E PORTABLE PH METER

IP65

- Separated type
- Reading mode: auto-read and continuous-read
- With temperature compensation (automatic/manual)
- One or two points calibration with standard
- Data capacity: 200 sets
- IP65 dust/waterproof level
- Auto power off





wristband (included)



KCl powder(included)



standard solution(included)

SPECIFICATION

PH	Range	-2.00~18pH
	Resolution	0.01pH
	Electronic unit accuracy	±0.01pH
	Measurement accuracy	±0.02pH
	Calibration point	1 or 2
	Standard recognition	NIST pH buffers: 4.01, 7.00, 10.01
Voltage	Range	-1999~1999mV
	Resolution	1mV
	Accuracy	±1.0%FS
Temperature	Range	-5~110°C/23~230°F
	Resolution	0.1°C/0.2°F
	Accuracy	±0.4°C/±0.7°F
Inputs		pH electrode: BNC(Q9)
		temp. probe: 4-pin aviation connector
Power supply		rechargeable battery
Dimension		80x225x35mm
Weight		400g

INCLUDED ACCESSORIES

Main unit	1pc
Electrode	1pc
Electrode holder	2pcs
Wristband	1pc
Silicone rubber case	1pc
AC/DC adapter	1pc
Standard solution	3 bottons
KCl powder	1 botton

EC210E PORTABLE CONDUCTIVITY METER

IP65

- Reading mode: auto-read and continuous-read
- With temperature compensation (automatic/manual)
- With auto-hold feature
- Cell constant is adjustable
- One point calibration with standard
- Data capacity: 200 sets
- IP65 dust/waterproof
- Auto power off level





wristband (included)



standard solution(included)

SPECIFICATION

Conductivity	**Range**	0.00µS/cm~200mS/cm
	Resolution	0.01µS/cm minimum
	Electronic unit accuracy	±1.0%FS
	Measurement accuracy	±1.5%FS
	Reference temperature	25°C/77°F
	Calibration point	1
	Standard recognition	84µS/cm,1413µS/cm,12.88mS/cm
TDS	**Range**	0.00mg/L~300g/L
	Resolution	0.01mg/L minimum
	Accuracy	±1.0%FS
Temperature	**Range**	-5~110°C/23~230°F
	Resolution	0.1°C/0.2°F
	Accuracy	±0.4°C/±0.7°F
Input		electrode with 5-pin aviation connector
Power supply		rechargeable battery
Dimension		80x225x35mm
Weight		400g

INCLUDED ACCESSORIES

Main unit	1pc
Electrode	1pc
Electrode holder	2pcs
Wristband	1pc
Silicone rubber case	1pc
AC/DC adapter and charging cable	1pc
Standard solution	1botton

EC20 PEN-TYPE CONDUCTIVITY METER

IP67 Charge

- Ideal for petrochemical, biopharma, wastewater, mining, and industrial applications
- With automatic temperature compensation
- Electrode calibration
- Data capacity: 100 sets
- IP67 dust/waterproof

VIDEO



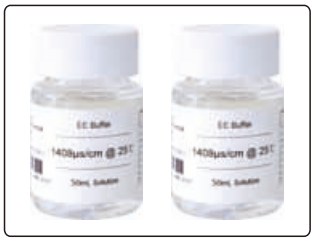

standard solution(included)

SPECIFICATION

Conductivity	Range	0.00μS/cm~20mS/cm
	Resolution	0.1μS/cm minimum
	Repeatability	±1.0%FS
	Measurement accuracy	±1%FS
	Reference temperature	25°C
	Calibration point	1~3
	Standard recognition	146,6μS/cm,1408μS/cm,12.85mS/cm
TDS	Range	0.00mg/L~10g/L
	Resolution	0.1mg/L minimum
	Accuracy	±1.0%FS
Temperature	Range	0~60°C
	Resolution	0.1°C
	Accuracy	±0.4°C
Input		conductive electrode
Power supply		rechargeable battery
Dimension		195x35x35mm
Weight		150g

INCLUDED ACCESSORIES

Main unit	1pc
Charge base	1pc
AC/DC adapter and charging cable	1pc
Standard solution	2 bottons

DO210E PORTABLE DISSOLVED OXYGEN METER

IP65

- Support for air-saturated water or zero oxygen calibration
- With temperature compensation (automatic/manual)
- With auto-hold feature
- Cell constant is adjustable
- One point calibration with standard
- Data capacity: 200 sets
- IP65 dust/waterproof
- Auto power off level





wristband (included)



standard solution(included)

SPECIFICATION

Dissolved oxygen	**Range**	0.00~20.00 mg/L
	Resolution	0.01mg/L
	Accuracy	±0.10mg/L
Saturation	**Range**	0.00~200%
	Resolution	0.1%
	Accuracy	±2.0
Temperature	**Range**	-5~110°C/23~230°F
	Resolution	0.1°C/0.2°F
	Accuracy	±0.4°C/±0.7°F
Input		electrode with 4-pin aviation connector
Power supply		rechargeable battery
Dimension		80x225x35mm
Weight		400g

INCLUDED ACCESSORIES

Main unit	1pc
Electrode	1pc
Electrode holder	2pcs
Wristband	1pc
Silicone rubber case	1pc
AC/DC adapter and charging cable	1pc
Standard solution	1botton

CAT12 CROSS CUT ADHESION TESTER

- Used to test the adhesion of paint on metal, plastic and so on
- Conforms to ISO 2409, ASTM D3359, BS00E6
- Blade hardness: 58-62HRC



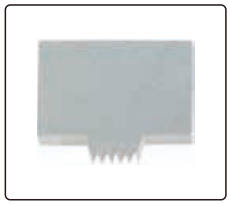

blade(1mm pitch)

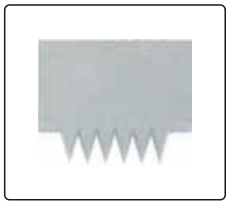

blade(2mm pitch)

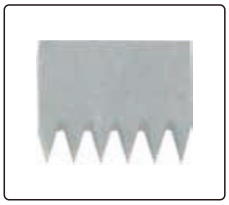

blade(3mm pitch)



3M tape



Magnifier



step 1: make grid cutting on surface



step 2: paste and remove the tape

0	5B	0	
1	4B	0-5%	
2	3B	5-15%	
3	2B	15-35%	
4	1B	35-65%	
5	0B	>65%	

step 3: according to the shedding status, judge the adhesion grade

SPECIFICATION

Blade pitch		1mm	2mm	3mm
Applied paint thickness	on hard substrate (like metal)	0-60μm	61-120μm	121-250μm
	on soft substrate (like wood, plaster)	—	0-120μm	121-250μm
Minimum substrate thickness	hard substrate (like metal)	0.25mm	0.25mm	0.25mm
	soft substrate (like wood, plaster)	—	10mm	10mm
Minimum size of test sample		150x100mm		
Dimension		130x25x30mm		
Weight		130g		

INCLUDED ACCESSORIES

Main unit	1pc
1mm pitch blade	1pc
2mm pitch blade	1pc
3mm pitch blade	1pc
Test tape	1pc
Magnifier	1pc
Small brush	1pc

LSM25/LSM50 LASER SCAN MICROMETER

- It can be used to measure the diameter of wires, cables and steel bars, as well as the width or thickness of steel strips and copper strips
- Can be accurately measured whether the product shakes or not
- Non contact and precision measurement

VIDEO



LSM25

SPECIFICATION

Code	LSM25	LSM50
Range	0.1-20mm	0.4-50mm
Accuracy (d is diameter in mm)	±(0.2d+2)μm	±(0.3d+2)μm
Resolution	1μm	
Laser wavelength	650nm	
Sampling time	600 times/s	
Output	RS485/MODBUS	
Alarm output	DC24V/1A	
Working temperature	5-45°C	
Power supply	AC100-240V	
Dimension	298×72×167 mm	400×76×164 mm
Weight	8kg	10kg

INCLUDED ACCESSORIES

Main unit	1pc
Display	1pc
Power cable	1pc

GM268 20°/60°/85°GLOSS METER

Charge

- To test the gloss of painting, printing ink, surfaces of future metal, granite, ceramic, plastic, paper, etc.
- Conforms to ISO 2813, ASTM D 2457, ASTM D 523
- Large display touch screen



SPECIFICATION

Incidence angle	20°	60°	85°
Measuring range	0~2000GU	0~1000GU	0~160GU
Resolution	0.1GU (range≤119.9GU)		
Accuracy	±1.5GU (range≤100GU)		
	±1.5% (range>100GU)		
Repeatability	±0.1GU (range<10GU)		
	±0.2GU (range: 10~100GU)		
	±0.2% (range>100GU)		
Data output	USB		
Measuring speed	1s		
Measuring area	10×10mm	15×9mm	36×5mm
Power suppy	Rechargeable battery		
Dimension	160×75×90mm		
Weight	350g		

INCLUDED ACCESSORIES

Main unit	1pc
Calibration block	1pc
USB cable and software	1pc

GM268S 20°/60°/85°GLOSS METER

Certificate AA

- To test the gloss of painting, printing ink, surfaces of future metal, granite, ceramic, plastic, paper, etc.
- Conforms to ISO 2813, ASTM D 2457, ASTM D 523

VIDEO



SPECIFICATION

Incidence angle	20°	60°	85°
Measuring range	0~2000GU	0~1000GU	0~160GU
Resolution	0.1GU (range≤119.9GU)		
Accuracy	±1.5GU (range≤100GU)		
	±1.5% (range>100GU)		
Repeatability	±0.2GU (range: 0~100GU)		
	±0.2% (range>100GU)		
Memory	35000		
Data output	USB		
Measuring speed	0.5s/angle		
Measuring area	10×9mm	15×9mm	38×5mm
Power suppy	AA		
Dimension	160×52×84mm		
Weight	300g		

INCLUDED ACCESSORIES

Main unit	1pc
Calibration block	1pc
AA battery	1pc
USB cable and software	1pc

GM60 60° GLOSS METER

Certificate AA

- Basic type
- To test the gloss of painting, printing ink, surfaces of future metal, granite, ceramic, plastic, paper, etc.
- Conforms to ISO 2813, ASTM D 2457, ASTM D 523
- With manufacturer inspection certificate



SPECIFICATION

Incidence angle	60°
Measuring range	0~200GU
Measuring area	9x15mm
Resolution	1GU
Repeatability	±1GU (0-100GU), ±1%GU (100-200GU)
Measuring speed	0.5S
Power supply	AA battery
Dimension	160x52x84mm
Weight	300g

INCLUDED ACCESSORIES

Main unit	1pc
Calibration block	1pc
AA battery	1pc

CM100 COLOR METER

Charge

- Pocket size, easy to carry
- Press one button to get the measure result in one second
- With software



SPECIFICATION

Illuminating/viewing geometry	8/d
Measuring aperture	Ø8mm
Measuring wave length	400~700nm
Wave length step	10nm
View angle	2°/10°
Light source device	LED light
Memeory	10pcs standards
Measuring time	1s
Power supply	rechargeable lithium-ion battery
Lamp Life	5 years, more than 3 million measurements
Charging Time	12 thousand measurements(full electricity)
Output	USB/ bluetooth
Dimension	Ø30×100 mm
Weight	88g

INCLUDED ACCESSORIES

Main unit	1pc
White calibration block	1pc
Charger	1pc
USB cable and software	1pc

CM200 COLOR METER

Charge

- Convenient and fast locating
- Portable structure design which is more conductive to keep the instrument stable

VIDEO



SPECIFICATION

Illuminating/Viewing Geometry	8/d
Measuring Aperture	Φ8mm
Light Source	D65
Light Source Device	LED blue light excitation
Memeory	5000pcs standards
Repeatability	<0.08ΔE*ab
Power supply	rechargeable lithium-ion battery
Lamp Life	3 years, more than 1 million measurements
Charging Time	2 hours (first time 8 hours--100% electricity)
Dimension	205×70×100 mm
Weight	500g

INCLUDED ACCESSORIES

Main unit	1pc
White calibration block	1pc
Charger	1pc
USB cable and software	1pc

CM300 SPECTROPHOTO METER

Data output | Charge

- Conforms with CIE No.15, ISO7724-1, ASTM E1164 and DIN5033 Teil7 standards
- Portable design, sturdy construction, anti-shaking, dustproof and knock
- D/8 geometric optical structure, suitable for a variety of measurement conditions
- Full spectrum with highlife and low power consumption, the combined LED light source
- Dual optical path system, the SCI and SCE spectra of samples can be measured simultaneously
- 2/10° standard observer angle, multiple light source mode, multiple color space a variety of chroma parameters
- Imported white board is not easy to dirty, ensure measurement accuracy



Standard measure



Sample measurement and color difference



Calibration cavity (included)



SPECIFICATION

Optical geometry		D/8 (diffuse lighting, receiving at 8° direction), SCI/SCE (including specular light/removing specular light)
Integrating sphere size		Ø40mm
Light source		combined full spectrum LED light source
Sensor		CMOS dual beam splitting sensor
Wavelength range		400~700nm
Wavelength interval		10nm
Measured reflectance range		0~200%
Reflectance resolution		0.01%
Display resolution		0.01
Color space		CIE LAB, XYZ, Yxy, LCh, CIE LUV, s-RGB, HunterLab, βxy, DIN Lab99
Color difference formula		ΔE*ab, ΔE*uv, ΔE*94, ΔE*cmc(2:1), ΔE*cmc(1:1), ΔE*00, DINAE99, ΔE(Hunter)
Other colorimetric index		Reflectivity, WI (ASTM E313, CIE/ISO, AATCC, Hunter), YI (ASTM D1925, ASTM 313), metamerism index Mt, color fastness, color fastness, strength, hiding degree, 555 tone classification, Munsell (C/2) (realized by mobile phone APP)
Observer angle		2°/10°
Illumination		D65, A, C, D50, D55, D75, F1, F2(CWF), F3, F4, F5, F6, F7(DLF), F8, F9, F10(TPL5), F11(TL84), F12(TL83/U30), U35, NBF, ID50, ID65
Measuring time		about 1s
Repeatability	**Spectral reflectance**	within 0.1% of standard deviation
	Colorimetric values	ΔE*ab≤0.04 (after whiteboard correction, measuring the whiteboard 30 times at 5s interval)
Inter-instrument error		ΔE*ab≤0.4 (BCRA series II, average value of 12 color plates)
Memory		500 records for standard sample and 5000 records for sample, supporting PC storage
Data output		USB
Light source lifetime		10 years, more than 1 million times measurements
Battery		3.7V/3000mAh, rechargeable 8000 times continuous tests
Dimension (LxWxH)		94x68x188mm
Weight		750g

INCLUDED ACCESSORIES

Main unit	1pc
Calibration cavity	1pc
USB cable	1pc

USB disk	1pc
AC/DC adapter	1pc

CM3010 SPECTROPHOTO METER

Data output | Charge

- Concave grating spectrophotometric
- 3.5-inch TFT color LCD
- D/8 geometrical optics, conforms with CIE No.15,ISO7724/1,ASTM E1164, DIN5033
- Use long life and low power consumption combined LED light source
- Ø8mm aperture, support both SCI and SCE at the same time
- Large storage capacity, over 20,000 measurement data
- USB port and Bluetooth 4.0
- With software

VIDEO



SPECIFICATION

Optical geometry		reflect: di:8°, de:8°(diffused illumination, 8-degree viewing angle)
Integrating sphere size		Ø48mm
Light source		combined LED ligh
Spectrophotometric mode		concave grating
Sensor		256 image element double array CMOS image sensor
Wavelength range		400~700nm
Wavelength interval		10nm
Semiband width		10nm
Measured reflectance range		0~200%
Measuring aperture		Ø8mm
Specular component		SCI&SCE
Color space		CIE LAB, XYZ, Yxy, LCh, CIE LUV, HunterLAB
Color difference formula		ΔE*ab, ΔE*uv, ΔE*94, ΔE*cmc(2:1), ΔE*cmc(1:1), ΔE*00v, ΔE(Hunter)
Other colorimetric index		WI(ASTM E313, CIE/ISO, AATCC, Hunter), YI(ASTM D1925, ASTM 313), Metamerism index MI, Staining fastness, Color fastness, Colorstrength, Opacity
Observer angle		2°/10°
Illuminant		A, C, D50, D55, D65, D75, F1, F2, F3, F4, F5, F6, F7, F8, F9, F10, F11, F12, CWF, U30, TI83, TI84, U35
Displayed data		spectrogram/values, samples chromaticity values, color difference values/graph, PASS/FAIL result, color offset
Measuring time		2.6s
Repeatability	**Spectral reflectance**	MAV/SCI, within 0.1% of standard deviation(400~700nm: 0.2%)
	Colorimetric values	MAV/SCI: ΔE*≤0.04
Inter-instrument error		MAV/SCI: ΔE*≤0.2
Measurement mode		single measurement, average measurement
Data port		USB, Bluetooth 4.0
Data storage		standard 1000 pcs, sample 20000 pcs
Illuminant life span		5 years, more than 3 million times measurements
Battery		Li-ion battery, 5000 measurements within 8 hours
Dimension		184×77×105mm
Weight		600g

INCLUDED ACCESSORIES

Main unit	1pc
White and black calibration cavity	1pc
USB cable and software	1pc
AC/DC adapter	1pc

OPTIONAL ACCESSORIES

Printer	**CM3010-PT**
Powder test box	**CM3010-PB**

HM1000 HAZE METER

Data output

- Conform to the standards: ASTM D1003/1044, GB/T 2410, JJF 1303-2011, CIE 15.2, JIS K7105, JIS K7361, JIS K 7136
- The instrument can easily achieve ASTM D1003 non-compensation method
- With quality control software

VIDEO



SPECIFICATION

Measuring range	0~100%
Accuracy	<0.4
Repeatability	0.1
Resolution	0.1
Integrating sphere size	Φ154mm
Light source	400nm to 700nm, combined LED light
Sensor	The PD array detector, satisfies CIE V(λ)2 degree visual response
Measuring aperture	Φ20mm
Sample size	Thickness<170mm
Observer angle	2°
Illumination	D65, A, C
Measuring time	about 1.5s
Data output	USB
Illumination life span	5 years, more than 3 million times measurements
Display	7-inch TFT color LCD, capacitive touch screen
Size	290×211×511mm
Weight	7.6kg

INCLUDED ACCESSORIES

Main unit	1pc
Calibration cover	1pc
USB cable and software	1pc
AC/DC adapter	1pc

DRM50 DIGITAL PORTABLE REFRACTOMETER

Charge

- Used to measure the concentration of coolant, honey water and salt water
- Power off automatically

Pipette (included)

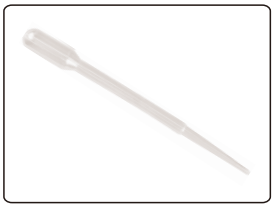



SPECIFICATION

Measuring range	0-50%
Graduation	0.1%
Accuracy	±0.2%
Battery	rechargeable battery
Dimension	143x42x22mm
Weight	115g

INCLUDED ACCESSORIES

Main unit	1pc
Pipette	1pc
Cable for recharging	1pc

SERIES RM PORTABLE REFRACTOMETER

- Used to measure the concentration of coolant, honey water and salt water

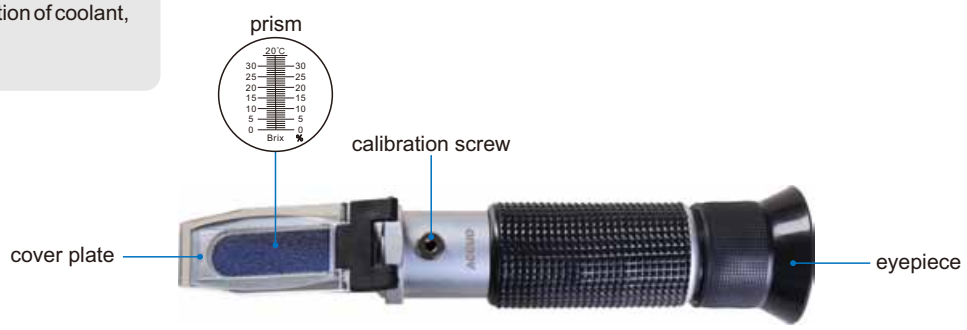

RM32

SPECIFICATION

Code	RM10	RM20	RM32
Measuring range	0-10%	0-20%	0-32%
Graduation	0.1%		0.2%
Accuracy	±0.1%	±0.1%	±0.2%
Dimension	160x27x40mm		
Weight	175g		

INCLUDED ACCESSORIES

Main unit	1pc
Pipette	1pc
Screwdriver	1pc

RM50S AUTOMOTIVE REFRACTOMETER

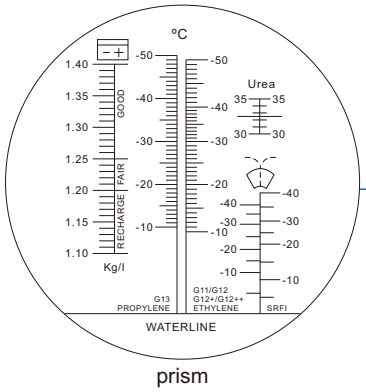

prism



SPECIFICATION

Range (ethylene)	Glycol	0-50°C
	Propylene Glycol	0-50°C
	Battery fluid	1.10-1.40kg/L
	Cleaning liquid	0-40°C
	Adblue(Urea)	30-35%
Accuracy (ethylene)	Glycol	5°C
	Propylene Glycol	5°C
	Battery fluid	0.01kg/L
	Cleaning liquid	10°C
	Adblue(Urea)	0.2%

INCLUDED ACCESSORIES

Main unit	1pc
Pipette	1pc
Screwdriver	1pc

SERIES DTG DIAL TENSION GAUGE

- Used in clockwise and counter-clockwise directions
- With two pointers, can catch the max. value



DTG5

SPECIFICATION (Unit: N)

Code	DTG01	DTG03	DTG05	DTG1	DTG3	DTG5	DTG105
Range(N)	0.01-0.1	0.03-0.3	0.05-0.5	0.1-1	0.15-1.5	0.3-3	0.5-5
Graduation(N)	0.002	0.005	0.01	0.02	0.025	0.05	0.1
Accuracy	±2%(full scale)						
Dimension(LxWxH)	90x47x19mm						
Weight	60g						

SPECIFICATION (Unit: gf)

Code	DTG10G	DTG30G	DTG50G	DTG100G	DTG150G	DTG300G	DTG500G
Range(gf)	1-10	3-30	5-50	10-100	15-150	30-300	50-500
Graduation(gf)	0.2	0.5	1	2	2.5	5	10
Accuracy	±2%(full scale)						
Dimension(LxWxH)	90x47x19mm						
Weight	60g						

SERIES DFXXS DIGITAL FORCE GAUGE

Certificate AAA

- Basic type
- For pull and push measurement
- Unit: N, kgf, ozf, lbf
- Low and high limits setting with judgement
- With backlight
- Power off automatically
- With manufacturer inspection certificate



DF500S



point



pull clamp



extension rod



flat



v-type



knife-edge

SPECIFICATION

Code	DF10S	DF20S	DF50S	DF100S	DF200S	DF500S
Range	10N	20N	50N	100N	200N	500N
Resolution	0.01N	0.01N	0.01N	0.1N	0.1N	0.1N
Accuracy	±1% x FS (full scale)					
Power	2xAAA batteries					
Dimension	124x60x31mm					
Weight	400g					

INCLUDED ACCESSORIES

Main unit	1pc
AAA batteries	2pcs
Push/pull clamps	6pcs(flat, V type, knife-edge, point, pull clamp, extension rod)

SERIES DF DIGITAL FORCE GAUGE

Certificate Charge

- For pull and push measurement
- Adjusting the display direction automatically
- With overload protection
- Peak and real-time working mode
- Unit: mN, N, gf, kgf, ozf, lbf
- Memory: 1000
- Power off automatically
- Low and high limits setting with judgement
- With software, can show the force graph
- With manufacturer inspection certificate

VIDEO



DF200



Stand(Code: **FS1000, Optional**)



PR100 printer **(Optional)**



flat



v-type



knife-edge



point



pull clamp

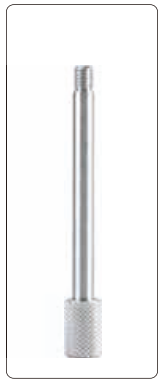

extension rod

SPECIFICATION

Code	DF10	DF20	DF50	DF100	DF200	DF500	DF1000
Range	10N	20N	50N	100N	200N	500N	1000N
Resolution	0.001N	0.005N	0.005N	0.005N	0.005N	0.01N	0.1N
Accuracy	±0.2% x FS (full scale)						
Power	rechargeable battery						
Dimension	153x73x34mm						
Weight	700g						

INCLUDED ACCESSORIES

Main unit	1pc
Charger	1pc
Software	1pc
Push/pull clamps	6pcs(flat, V type, knife-edge, point, pull clamp, extension rod)

OPTIONAL ACCESSORIES

Printer	PR100
Stand	FS1000

SERIES DF DIGITAL FORCE GAUGE

Certificate Charge

- For pull and push measurement
- Adjusting the display direction automatically
- With overload protection
- Peak and real-time working mode
- Unit: mN, N, gf, kgf, ozf, lbf
- Memory: 1000
- Power off automatically
- Low and high limits setting with judgement
- With software, can show the force graph
- With manufacturer inspection certificate

VIDEO



DF5K



PR100 printer **(Optional)**



flat clamp **(Optional)**



extension **(Optional)**



pull clamp **(Optional)**

SPECIFICATION

Code	DF2K	DF5K	DF10K	DF20K
Range	2000N	5000N	10000N	20000N
Resolution	0.5N	1N	1N	1N
Accuracy	±0.2% x FS (full scale)			
Power	rechargeable battery			
Dimension	153x73x34mm			
Weight	700g			

INCLUDED ACCESSORIES

Main unit	1pc
Sensor	1pc
Charger	1pc
Software	1pc

OPTIONAL ACCESSORIES

M12 Flat clamp(for DF2K, DF5K and DF10K)	DF2K-FC
M12 Extension (for DF2K, DF5K and DF10K)	DF2K-ER
M12 Pull clamp (for DF2K, DF5K and DF10K)	DF2K-PC
M18 Flat clamp (for DF20K)	DF20K-FC
M18 Extension (for DF20K)	DF20K-ER
M18 Pull clamp (for DF20K)	DF20K-PC
Printer	PR100

SERIES DFXXE DIGITAL FORCE GAUGE

Certificate

Charge

- For pull and push measurement
- Adjusting the display direction automatically
- With overload protection
- Peak and real-time mode
- Unit: N, gf, kgf, ozf, lbf
- Memory: 500
- Power off automatically
- With manufacturer inspection certificate

VIDEO



DF1000E



Stand(Code: **FS1000, Optional**)



PR100 printer **(Optional)**



flat



v-type



knife-edge



point



pull clamp

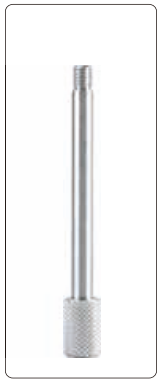

extension rod

SPECIFICATION

Code	DF10E	DF50E	DF100E	DF500E	DF1000E
Range	10N	50N	100N	500N	1000N
Resolution	0.01N	0.01N	0.1N	0.1N	1N
Accuracy	±0.3% x FS (full scale)				
Power	rechargeable battery				
Dimension	150x72x33mm				
Weight	450g				

INCLUDED ACCESSORIES

Main unit	1pc
Charger	1pc
Software	1pc
Push/pull clamps	6pcs(flat, V type, knife-edge, point, pull clamp, extension rod)

OPTIONAL ACCESSORIES

Printer	PR100
Stand	FS1000

SERIES NK FORCE GAUGE

Certificate

- Push and pull test
- Peak(max.) or tracking work mode
- With manufacturer inspection certificate



Stand(Code: **FS1000, Optional**)



NK-500

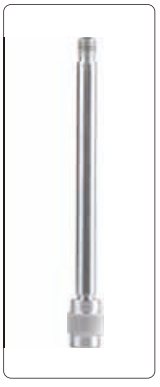

extension rod



flat



v-type



knife-edge



point



pull clamp

SPECIFICATION

Code	NK-20	NK-30	NK-50	NK-100	NK-200	NK-300	NK-500
Range(N)	20	30	50	100	200	300	500
Range(Kg)	2	3	5	10	20	30	50
Resolution(N)	0.1	0.2	0.25	0.5	1	2	2.5
Accuarcy	±2% xFS (full scale)						

INCLUDED ACCESSORIES

Main unit	1pc
Push tip	4pcs (flat, V type, knife-edge, point)
Pull clamp	1pc
Extension rod	1pc

OPTIONAL ACCESSORIES

Stand	FS1000

SERIES FS TEST STAND FOR FORCE GAUGE

- For force gauges
- To be used in vertical and horizontal orientation

Application

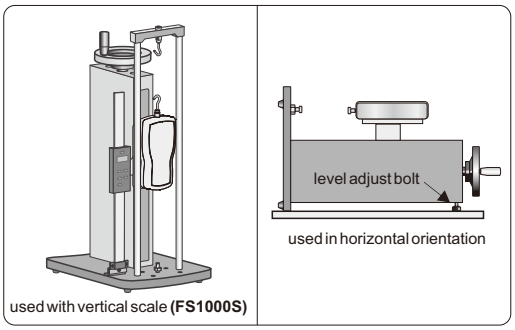

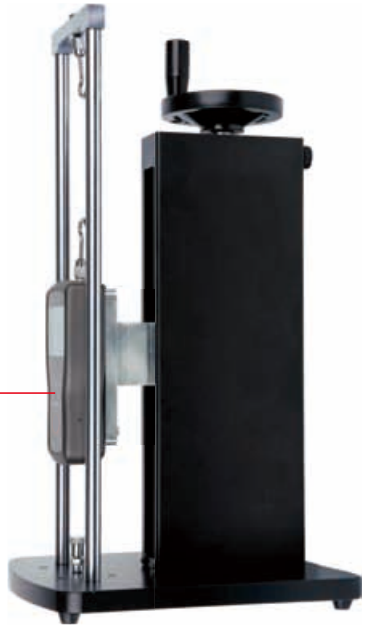

Force gauge is not included

FS1000

SPECIFICATION

Code	FS1000S	FS1000
Scale	with	without
Load capacity	1000N	
Travel	200mm (3mm vertical movementper revolution of handwheel)	
Dimension	96x250x446mm	
Weight	13kg	

SERIES DF CLAMPS FOR FORCE GAUGE

unit:mm

FLAT CHUCK (Code: DF-FC1)

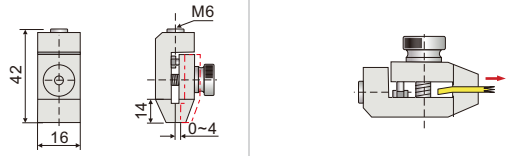

FLAT CHUCK (Code: DF-FC2)

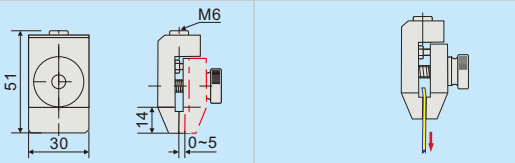

CAM GRIP (Code: DF-CG1)

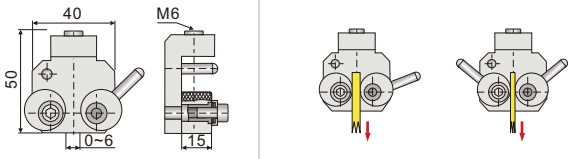

CAM GRIP (Code: DF-CG2)

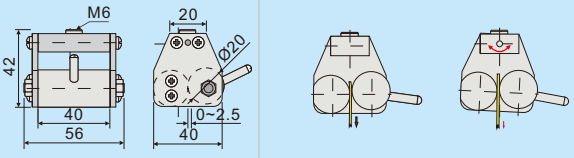

LOCK THREAD ADAPTER (Code: DF-TA)

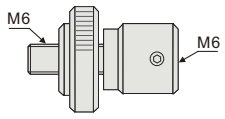

WIRE GRIP (Code: DF-WG1)

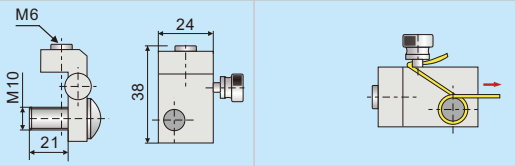

WIRE TERMINAL GRIP (Code: DF-TWG1)

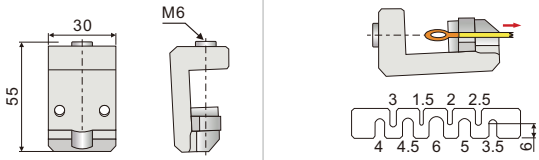

WEDGE GRIP (Code: DF-WT1)

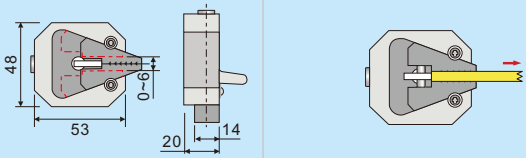

DFS500 MOTORIZED VERTICAL TEST STAND

- Used to measure the force of pull or push with series DF force gauge
- Programmable, can do automatic testing cycle
- Can set three working modes: displacement cycle, force cycle, user-defined cycle
- With alarm: position, force and motor block



SPECIFICATION

Max. capacity	650N
Max. travel	220mm
Moving speed	30-720mm/min(adjustable)
Resolution of speed	1mm/min
Moving speed accuracy	2%
Displacement resolution	0.01mm
Displacement accuracy	±0.3mm
Output	USB, RS232
Working temperature	10-40°C
Power supply	AC100-240V
Dimension	340×180×630 mm
Weight	15kg

INCLUDED ACCESSORIES

Main unit	1pc
Software and USB cable	1pc
Power cable	1pc

DFS500H MOTORIZED HORIZONTAL TEST STAND

- Used to measure the force of pull or push with series DF force gauge
- Programmable, can do automatic testing cycle
- Can set three working modes: displacement cycle, force cycle, user-defined cycle
- With alarm: position, force and motor block

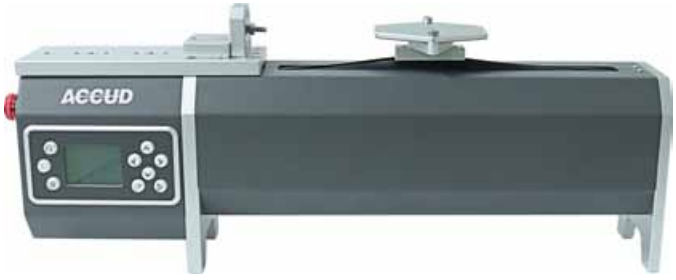

SPECIFICATION

Max. capacity	650N
Max. travel	220mm
Moving speed	30-720mm/min(adjustable)
Resolution of speed	1mm/min
Moving speed accuracy	2%
Displacement resolution	0.01mm
Displacement accuracy	±0.3mm
Output	USB, RS232
Working temperature	10-40°C
Power supply	AC100-240V
Dimension	671×120×278 mm
Weight	13kg

INCLUDED ACCESSORIES

Main unit	1pc
Software and USB cable	1set
Power cable	1pc

SERIES DST DIGITAL SPRING TESTER

- For spring force testing
- Peak and real-time working mode
- Unit: N, kgf, lbf
- Power off automatically
- Low and high limits setting with judgement
- With digital scale, resolution:0.01mm

VIDEO



DST50

SPECIFICATION

Code	DST10	DST20	DST30	DST50	DST100	DST200	DST300	DST500
Capacity	10N	20N	30N	50N	100N	200N	300N	500N
Resolution	0.001N	0.002N	0.01N	0.01N	0.02N	0.05N	0.1N	0.1N
Test range	5%-100% capacity							
Accuracy	±1% x FS (full scale)							
Max. spring length(free status)	65mm			95mm				
Range of digital scale	65mm			95mm				
Disk diameter	Ø30mm			Ø49mm				
Power	220V/110V							
Dimension	300x235x600mm			300x235x620mm				
Weight	13.2kg	13.2kg	13.2kg	17.3kg	19.1kg	19.1kg	19.1kg	20.8kg

INCLUDED ACCESSORIES

Main unit	1pc
Power cable	1pc
Foot screw	4pcs

SERIES UTT ELECTRONIC UNIVERSAL TENSILE TESTING MACHINE

- For tensile, tear testing of different kinds of materials
- With testing analysis software
- Unit: N, kN, Kgf, Lbf, Mpa, Lbf/In², Kgf/mm²

VIDEO

Software

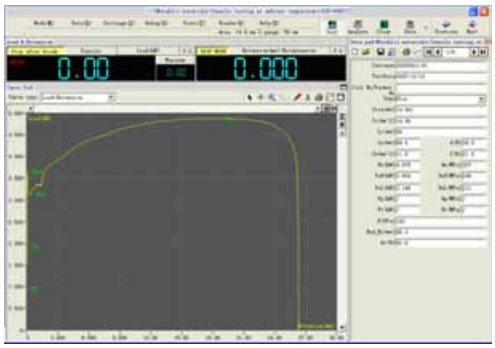



UTT500



UTT5000

SPECIFICATION

Code	UTT50	UTT100	UTT200	UTT500	UTT1000	UTT2000	UTT5000	UTT10000	UTT20000
Type	single column				double column				
Max.capacity	50kg	100kg	200kg	500kg	1000kg	2000kg	5000kg	10000kg	20000kg
Accuracy	0.5%	0.5%	0.5%	0.5%	0.5%	0.5%	0.5%	0.5%	0.5%
Resolution	1/200000xFS (Max. capacity)				1/500000xFS(Max. capacity)				
Max. traval (mm)	600				770(pull) / 1000(push)			650	800
Width	100mm				450mm			550mm	450mm
Test speed	0.1-500mm/min								
Moving speed accuracy	±0.3%								
Movement controller	servo motor								
Power supply	100-240AC								
Dimension	500×380×1300mm				850×550×1850mm			950×660×2000mm	1100×760×2100mm
Weight	150kg				420kg			680kg	750kg

INCLUDED ACCESSORIES

Main unit	1pc
Computer	1pc
Fixture	1set
Printer	1pc

SERIES TWM TORQUE WRENCH

Certificate

- Easy to set the torque value
- Accuracy: ±4% *
- According to ISO6789, ASMEB107. 14
- With manufacturer inspection certificate



TWM25

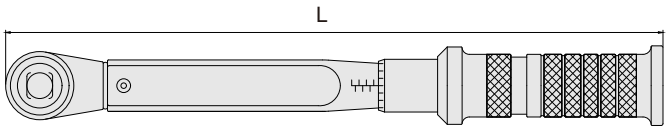

SPECIFICATION

Code	TWM25	TWM50	TWM100	TWM200	TWM340
Range	5~25N.m	10~50N.m	20~100N.m	40~200N.m	70~340N.m
Size of square drive	3/8"	3/8"	3/8"	1/2"	1/2"
Length(L)	275mm	275mm	380mm	505mm	695mm
Weight	420g	420g	580g	1.3kg	1.9kg

* Accuracy is available upon request

SERIES TWM-B TORQUE WRENCH

Certificate

- Economic type
- Easy to set the torque value
- Accuracy: ±4%(clockwise)
- According to ISO6789, ASMEB107. 14
- With manufacturer inspection certificate



TWM25B

SPECIFICATION

Code	TWM25B	TWM60B	TWM60D	TWM110B	TWM110C	TWM210B	TWM330B
Range(N.m)	5~25	12~60	12~60	22~110	22~110	42~210	66~330
Size of square drive	1/4"	3/8"	1/2"	3/8"	1/2"	1/2"	1/2"
Length	250mm	415mm	425mm	460mm	470mm	490mm	565mm
Weight	350g	920g	980g	1.06kg	1.17kg	1.26kg	1.34kg

Code	TWM550B	TWM800B	TWM1000B	TWM1500B	TWM2000B	TWM3000B
Range(N.m)	110~550	160~800	200~1000	300~1500	400~2000	600~3000
Size of square drive	3/4"	3/4"	3/4"	1"	1"	1"
Length	900mm	1200mm	1200mm	1260mm	1260mm	1260mm
Weight	4.3kg	5.6kg	5.6kg	9.2kg	9.2kg	10.5kg

SERIES STWM TORQUE WRENCH WITH BIT SET

Certificate

- Accuracy: ±4%(clockwise)



STWM25



STWM110

SPECIFICATION

Code	STWM25	STWM110	STWM210
Torque wrench code	TWM25B	TWM110C	TWM210B
Range	5~25N.m	22~110N.m	42~210N.m
Size of square drive	1/4"	½"	½"
Bit size	Hexagon type: H2-H2.5-H3-H4-H5-H6-H8 Torx type: T10-T15-T20-T25-T27-T30 Extension rod: 100mm	Hexagon type: 17-19-21-22-24mm Extension rod: 125mm	
Main application	bicycle industry	automotive industry	
Torque wrench length	250mm	460mm	490mm
Weight	790g	2200g	2300g

SERIES TW DIGITAL TORQUE WRENCH

Certificate AA

- Clockwise or anti-clockwise operation
- Unit: N.m, in.lb, ft.lb, kg.cm
- Peak or real-time working mode
- Automatic power off
- With calibration certificate

VIDEO

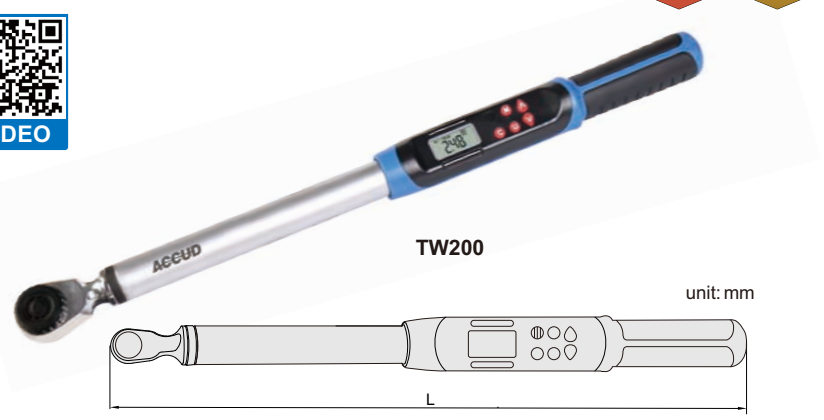

TW200

SPECIFICATION

Code		TW12	TW20	TW30	TW135	TW200	TW340	TW550	TW850	TW1500	TW2000
Range(N.m)		2.4~12	4~20	6~30	27~135	40~200	68~340	110~550	170~850	300~1500	400~2000
Resolution		0.01N.m	0.01N.m	0.1N.m	0.1N.m	1N.m	1N.m	1N.m	1N.m	1N.m	1N.m
Accuracy	Clockwise	±3%	±3%	±2%	±2%	±2%	±2%	±2.5%	±2.5%	±2.5%	±2.5%
	Anti-clockwise	±4%	±4%	±3%	±3%	±3%	±3%	±3.5%	±3.5%	±3.5%	±3.5%
Size of square drive		1/4"	1/4"	1/4"	3/8"	1/2"	1/2"	3/4"	3/4"	1"	1"
Length(L)		390mm	390mm	390mm	415mm	530mm	650mm	950mm	1220mm	1800mm	1800mm
Weight		900g	900g	900g	950g	1400g	1800g	3400g	4400g	13kg	14kg
Power		2xAA batteries									

SERIES TWD DIAL TORQUE WRENCH

Certificate

- Clockwise and counter-clockwise operation
- Comforms to DIN ISO 6789, ASME B107.300
- With manufacturer inspection certificate



TWD70

SPECIFICATION

Code	TWD3	TWD9	TWD18	TWD35	TWD70	TWD140	TWD240	TWD350
Range	0.7~3.5N.m 6~30in.lb	1.8~9N.m 15~75in.lb	3.6~18N.m 30~150in.lb	7~35N.m 60~300in.lb	14~70N.m 120~600in.lb	28~140N.m 20~100ft.lb	48~240N.m 35~175ft.lb	70~350N.m 50~250ft.lb
Accuracy	±3%	±3%	±3%	±3%	±3%	±3%	±3%	±3%
Graduation	0.05N.m 0.5in.lb	0.1N.m 1in.lb	0.2N.m 2in.lb	0.5N.m 5in.lb	1N.m 10in.lb	2N.m 1ft.lb	3N.m 2.5ft.lb	2.5N.m 2.5ft.lb
Square drive	1/4"	1/4"	3/8"	3/8"	3/8"	1/2"	1/2"	1/2"
Length	254mm	254mm	254mm	254mm	378mm	546mm	546mm	546mm
Weight	480g	480g	480g	480g	820g	1300g	1300g	1300g

SERIES TWI/TWF TORQUE WRENCH

Certificate

- Easy to set the torque value
- According to ISO6789, ASMEB107.300
- Metal construction
- With manufacturer inspection certificate

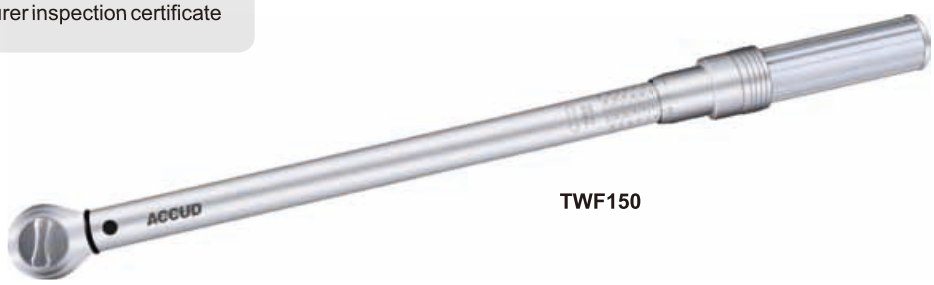

TWF150

SPECIFICATION

Code	TWI200	TWI250	TWF100	TWF150	TWF250	TWF600
Range	40~200lb.in	50~250lb.in	20~100lb.ft	30~150lb.ft	50~250lb.ft	100~600lb.ft
Graduation	1lb.in	1lb.in	0.5lb.ft	0.5lb.ft	1lb.ft	2.5lb.ft
Accuracy	±3%	±3%	±3%	±3%	±3%	±4%
Size of square drive	1/4"	3/8"	3/8"	1/2"	1/2"	3/4"
Length	11"	12.4"	16.7"	20"	26.7"	41.5"
Weight	1.5lb	1.8lb	2.3lb	2.6lb	2.9lb	13lb

SERIES TWS WINDOWS TORQUE WRENCH

Certificate

- Accuracy: ±4%(clockwise)
- According to ISO6789
- Unit: N.m; Lbf.ft
- With manufacturer inspection certificate





TWS60

SPECIFICATION

Code	Range (N.m)	Size of square drive	Length	Weight
TWS12	2.4~12	1/4"	300mm	0.58kg
TWS20	4~20	1/4"	300mm	0.58kg
TWS20B	4~20	3/8"	300mm	0.60kg
TWS30	6~30	3/8"	315mm	0.68kg
TWS60	12~60	3/8"	400mm	0.86kg
TWS60B	12~60	1/2"	415mm	0.90kg
TWS100B	20~100	1/2"	470mm	1.12kg
TWS200	40~200	1/2"	495mm	1.18kg

Code	Range (N.m)	Size of square drive	Length	Weight
TWS330	66~330	1/2"	555mm	1.28kg
TWS400	80~400	1/2"	725mm	1.90kg
TWS400B	80~400	3/4"	825mm	3.05kg
TWS550	110~550	3/4"	825mm	3.93kg
TWS1000	200~1000	3/4"	1115mm	5.28kg
TWS1500	300~1500	1"	1250mm	8.20kg
TWS2000	400~2000	1"	1250mm	8.20kg
TWS3000	600~3000	1"	1250mm	9.50kg

SERIES TQ DIGITAL TORQUE SCREWDRIVER

Certificate AAA

- Clockwise or anti-clockwise operation
- Peak and track working mode
- With audible and visible alarm when the value is closed to setting target
- With manufacturer inspection certificate



TQ50CN

unit: mm

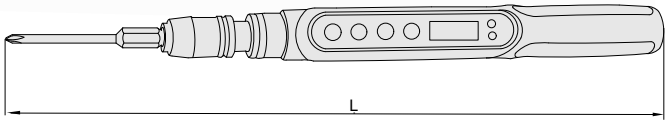

SPECIFICATION

Code	TQ50CN	TQ200CN	TQ400CN
Range	10~50cN.m	40~200cN.m	80~400cN.m
Clockwise operation accuracy	±3%	±2.5%	±2.5%
Anti-clockwise operation accuracy	±4%	±3.5%	±3.5%
Resolution	0.1cN.m	0.1cN.m	0.1cN.m
Size of shank	1/4"	1/4"	1/4"
Length (L)	258mm	268mm	268mm
Weight	200g	200g	200g
Power	1xAAA battery		

SERIES DT DIGITAL TORQUE INDICATOR

Certificate AAA

- Peak, preset and real-time working mode
- Unit: N.m, kgf.cm, lbf.ft, lbf.in
- Memory: 999
- Power off automatically
- With backlight
- With manufacturer inspection certificate



DT200

SPECIFICATION

Code	DT30	DT135	DT200
Range	5-30N.m	13.5-135N.m	20-200N.m
Drive size	1/2"	1/2"	1/2"
Resolution	0.01N.m	0.1N.m	0.1N.m
Accuracy	±2%(clockwise)/±2.5%(anti-clockwise)		
Memory	999		
Power	2xAAA batteries		
Weight	200g		

Application



INCLUDED ACCESSORIES

Main unit	1pc
AAA battery	2pcs
Convertor	2pcs

SERIES TWQ TORQUE MULTIPLIERS

- Accuracy: ±5%

Application





TWQ-5500

unit: mm

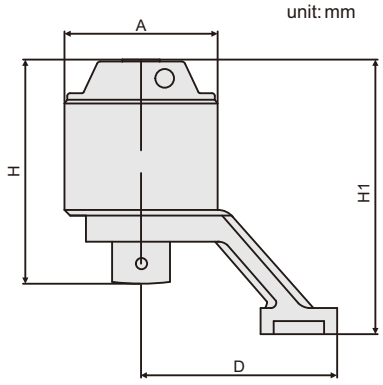

SPECIFICATION

Code	TWQ-1000	TWQ-2000	TWQ-3500	TWQ-5500	TWQ-7500	TWQ-10000
Capacity	1000N.m	2000N.m	3500N.m	5500N.m	7500N.m	10000N.m
Torque ratio	1:4.5	1:12	1:15	1:18.5	1:20	1:26.5
Square socket	½"	½"	½"	½"	½"	½"
Square driver	1"	1"	1"	1 ½"	1 ½"	1 ½"
For bolt	M20-30	M22-35	M30-45	M38-52	M42-60	M52-72
For net	S30-46	S32-55	S46-70	S55-80	S65-90	S80-105
Dimension(AxHxDxH1)	82x98.5x97x122.4	82x120x105x147	98x131x120x163	115x163.5x137x199	127x173x146x215	141x170x164x238
Weight	2.1kg	3.15kg	4.9kg	8.1kg	10.6kg	14kg

SERIES TQM TORQUE SCREWDRIVER

- Clockwise operation
- When achieving the setting target, there is "chatter"



TQM300

SPECIFICATION

Code	TQM60	TQM120	TQM300	TQM600
Range	0.12~0.6N.m	0.24~1.2N.m	0.6~3N.m	1.2~6N.m
Clockwise operation accuracy	±6%	±6%	±6%	±6%
Graduation	0.01N.m	0.02N.m	0.05N.m	0.1N.m
Size of shank	1/4"	1/4"	1/4"	1/4"
Length (L)	161mm	161mm	186mm	186mm
Weight	300g	300g	400g	400g

SERIES TTM DIGITAL BOTTLE CAP TORQUE METER

VIDEO

Certificate

Data output

Charge

- Test the open and tighten torque of bottle cap
  Peak, preset and real-time working mode
- Unit: N.m, N.cm, kgf.cm, lbf.ft, lbf.in
- Memory: 1000
- Power off automatically
- With software, can show the torque graph
- With manufacturer inspection certificate



TTM10

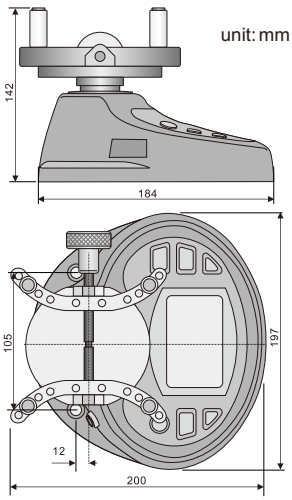

SPECIFICATION

Code	TTM2	TTM5	TTM10	TTM20
Range	0.1-2N.m	0.25-5N.m	0.5-10N.m	1-20N.m
Accuracy	±0.5%			
Resolution	0.0002N.m	0.0005N.m	0.001N.m	0.002N.m
Open size	Ø19.5-190mm			
Output	USB and RS232			
Power	rechargeable battery			
Weight	2.5kg			

INCLUDED ACCESSORIES

Main unit	1pc
Charger	1pc
Software with cable	1pc

OPTIONAL ACCESSORIES

Wireless printer	PR100

SERIES TTR DIGITAL TORQUE METER

Data output

Charge

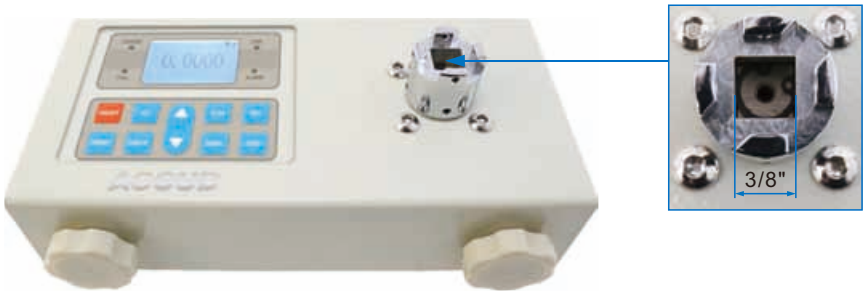

TTR05



- For testing the accuracy of torque screwdrivers like eletric or pneumatic and screwdrivers
- Clockwise and counter-clockwise operation
- Peak and track working modes
- High sampling frequency (1920 Hz) for accurate peak capture
- Unit: N.m, lb.in, kgf.cm
- Low and high limits setting with judgement
- Serial RS232 output, connect to PC to view torque value by software
- Turn off automatically

Test example



SPECIFICATION

Code	TTR01	TTR02	TTR03	TTR05	TTR10	TTR20
Range	1N.m	2N.m	3N.m	5N.m	10N.m	20N.m
Resolution	0.0001N.m				0.001N.m	
Accuracy	±1% (10%~100% range)					
Maximum test speed	3000rpm					
Number of memory	99 groups					
Power supply	built-in rechargeable battery, can be used for 10 hours					
Dimension	230x123x65mm					
Weight	2kg					

INCLUDED ACCESSORIES

Main unit	1pc
Run down adapter	1pc
Bits adaptor	4pcs
Power adapter	1pc
RS232 cable and software	1pc

SERIES TTB DIGITAL TORQUE METER

Certificate | Data output | Charge

- For torque wrench and torque screwdriver calibration
- Peak, preset and real-time working mode
- Unit: N.m, N.cm, kgf.cm, lbf.ft, lbf.in
- Memory: 1000
- Power off automatically
- With software, can show the torque graph
- With manufacturer inspection certificate

VIDEO



TTB10

run down adapter for torque meter(optional)



unit: mm

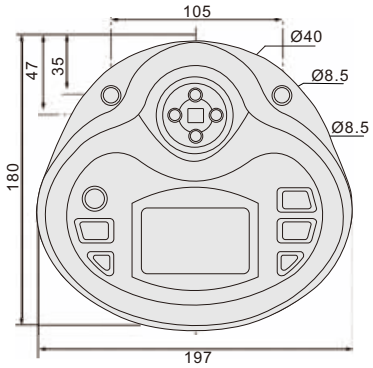



TTB500

Stand (optional)



SPECIFICATION

Code	TTB5	TTB10	TTB50	TTB100	TTB500	TTB1000
Range	0.25-5N.m	0.5-10N.m	2.5-50N.m	5-100N.m	25-500N.m	100-1000N.m
Accuracy	±0.3%					
Resolution	0.0005N.m	0.001N.m	0.005N.m	0.01N.m	0.05N.m	0.1N.m
Size of square drive	1/2"				3/4"	1"
Output	USB and RS232					
Power	rechargeable battery					
Weight	1.5kg				3kg	

INCLUDED ACCESSORIES

Main unit	1pc
Charger	1pc
Software with cable	1pc
Convertor(TTB500 and TTB1000 doesn't include)	1pc

OPTIONAL ACCESSORIES

Wireless printer	PR100
Stand(Arm length:150-600mm)	TTB-ST1
Stand(Arm length:150-1000mm)	TTB-ST2
Stand(Arm length:150-1500mm)	TTB-ST4

RUN DOWN ADAPTER FOR TORQUE METER(2N.m)	TTB-RDF2
RUN DOWN ADAPTER FOR TORQUE METER(6N.m)	TTB-RDF6
RUN DOWN ADAPTER FOR TORQUE METER(40N.m)	TTB-RDF40
RUN DOWN ADAPTER FOR TORQUE METER(100N.m)	TTB-RDF100

TTB-ST1/ST2/ST4 STAND FOR TORQUE WRENCH TESTING

- For calibrating torque wrench with TTB series torque meter



TTB-ST1

(Torque meter is not included)

unit: mm

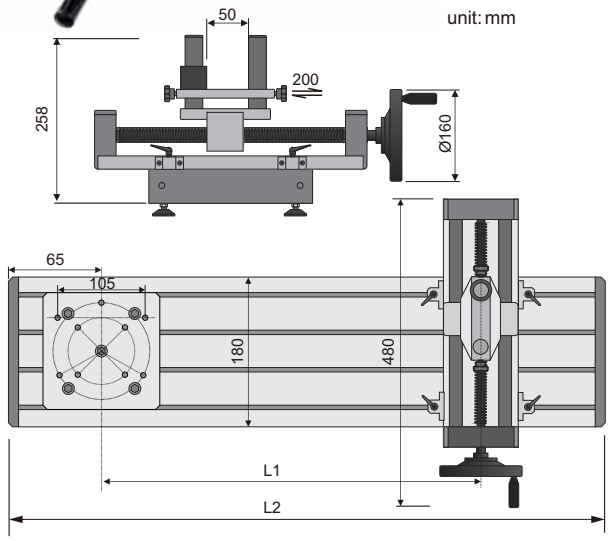

SPECIFICATION

Code	TTB-ST1	TTB-ST2	TTB-ST4
Arm length(L1)	150-600mm	150-1000mm	150-1500mm
Max. travel	200mm		
Max. force	1000N		2000N
Length(L2)	770mm	1270mm	1800mm
Weight	12kg	16kg	30kg

SERIES TTS DIGITAL TORQUE METER

Certificate Charge

- Adjustable open size for fixing
- Peak, preset and real-time working mode
- Unit: N.m, N.cm, kgf.cm, lbf.ft, lbf.in
- Memory: 1000
- Power off automatically
- With software, can show the torque graph
- With manufacturer inspection certificate

VIDEO



TTS5

unit: mm

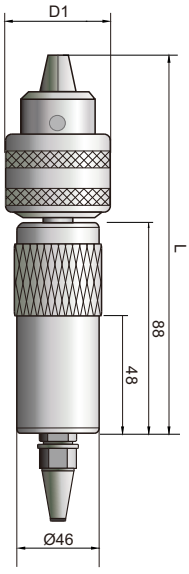

SPECIFICATION

Code	TTS1	TTS5	TTS10
Range	0.05-1N.m	0.25-5N.m	0.5-10N.m
Open size	Ø10mm	Ø10mm	Ø13mm
Resolution	0.0001N.m	0.0005N.m	0.001N.m
Accuracy	±0.3%		
Memory	1000		
Output	USB and RS232		
Power	rechargeable battery		
Weight	0.7kg		

INCLUDED ACCESSORIES

Main unit	1pc
Charger	1pc
Software with cable	1pc
Wrench	1pc

OPTIONAL ACCESSORIES

Wireless printer	PR100

Code	L	D1
TTS1	156mm	Ø43
TTS5	156mm	Ø43
TTS10	178mm	Ø53

SERIES TWT TORQUE WRENCH TESTER

- Used to test or calibrate torque wrench
- Contains two torque sensors, with same touch screen LCD



TWT200

SPECIFICATION

Code		TWT200	TWT500
Range	Sensor 1	2-20N.m	5-50N.m
	Sensor 2	20-200N.m	50-500N.m
Resolution	Sensor 1	0.002N.m	0.005N.m
	Sensor 2	0.02N.m	0.05N.m
Accuracy		0.3%	
Max. wrench lenght		830mm	
Driver size		½", 3/8", 1/4"	3/4", ½", 3/8"
Memory		1000	
Data output		USB	
Dimension		780×688×433 mm	
Weight		45kg	

INCLUDED ACCESSORIES

Main unit	1set
Charger	1pc
Driver adapter	2pcs
USB cable and software	1set

SERIES TWT MOTORIZED TORQUE WRENCH TESTER

- Used to test or calibrate torque wrench
- Loading force : motorized
- Contains two torque sensors, with same touch screen LCD



TWT200M

SPECIFICATION

Code		TWT200M	TWT500M	TWT1000M
Range	Sensor 1	2-20N.m	5-50N.m	10-100N.m
	Sensor 2	20-200N.m	50-500N.m	100-1000N.m
Resolution	Sensor 1	0.002N.m	0.005N.m	0.01N.m
	Sensor 2	0.02N.m	0.05N.m	0.1N.m
Accuracy		0.3%		
Max. wrench lenght		830mm		
Driver size		½", 3/8", 1/4"	3/4", ½", 3/8"	1", 3/4", ½", 3/8"
Memory		1000		
Data output		USB		
Dimension		780×635×443 mm		
Weight		55kg		

INCLUDED ACCESSORIES

Main unit	1set
Driver adapter	1set
Software and USB cable	1set
Power cable	1pc

SERIES TT DIGITAL TORQUE METER

- For torque wrench and torque screw driver calibration
- For clockwise and anti-clockwise operation
- Peak,preset and real-time working mode
- Power off automatically
- High and low limit with judgement





TT550



square drive

SPECIFICATION

Code	TT05	TT220	TT550	TT1000	TT2200
Range	0.1-0.5N.m	22-220N.m	55-550N.m	100-1000N.m	220-2200N.m
Accuracy	±1%	±0.5%			
Unit	N.m, kgf.cm, lbf.ft, lbf.in			N.m, lbf.ft	
Resolution	0.0001N.m	0.01N.m	0.01N.m	0.1N.m	0.1N.m
Size of square drive	1/4"	1/2"	3/4"	1"	1"
Conventor (optional)	without	1/2" to 3/8" 3/8" to 1/4"	3/4" to 1/2" 1/2" to 3/8"	1" to 3/4" 3/4" to 1/2" 1/2" to 3/8"	1" to 3/4" 3/4" to 1/2"
Power	AC/DC adapter				
Weight	3.1kg	3.6kg	4.9kg	6.4kg	6.4kg

INCLUDED ACCESSORIES

Main unit	1pc
Sensor(cable lenght 1.5m)	1pc
1.2m sensorextension cable	1pc
AC/DC adapter	1pc

PS075 PORTABLE SCALE

AAA

- Pocket size, easy to carry
- It can also measure the dimension
- With back light
- Power off automatically
- Can show temperature

VIDEO



SPECIFICATION

Range	0-75kg
Resolution	0.01kg
Accuracy	0.05kg (Weight≤50kg),0.2kg (Weight>50kg)
Unit	kg, lb, JIN, oz
Power supply	2xAAA battery
Dimension	70x135x30mm
Weight	185g

INCLUDED ACCESSORIES

Main unit	1pc
AAA battery	2pcs

WSC3000G ELECTRONIC WEIGHING SCALE FOR KITCHEN

AA

- LCD display, with backlight
- Automatic "Zero"
- Automatic power off



SPECIFICATION

Max. capacity	3kg
Min. capacity	0.5g
Division	0.1g
Verification interval	1g
Unit	g, oz, tl, lb
Automatic "zero" range	0-60g
Power supply	9V AD/DC adapter or 6x AA battery
Dimension of pan	15x15cm
Dimension	23x15x4cm

SERIES WSH ELECTRONIC BALANCE

Charge

- With counting and weighting functions
- LCD display, with backlight
- Overload and limits alarm
- RS232 output
- Automatic power off



WSH1000G

SPECIFICATION

Code	**WSH200G**	**WSH500G**	**WSH1000G**	**WSH2000G**	**WSH3000G**	**WSH5000G**	**WSH6000G**
Max. capacity	200g	500g	1000g	2000g	3000g	5000g	6000g
Min. capacity	0.2g			0.5g			
Division	0.01g						
Verification interval	0.1g						
Unit	g, ct, lb, oz, dr, gn, ozt, dwt						
Power supply	re-chargeable battery						
Dimension of pan	Ø12cm		18x19.7cm				
Dimension	32x21x8cm						

OPTIONAL ACCESSORIES

Weight for calibration	**Series WT**

SERIES WSJ HIGH PRECISION ELECTRONIC BALANCE

Charge

- High accuracy, mainly used to measure weight of golden and jewellery
- LCD display, with backlight
- Overload and limits alarm
- RS232 output
- Automatic power off



WSJ2000G

SPECIFICATION

Code	WSJ100G	WSJ200G	WSJ300G	WSJ600G	WSJ1000G	WSJ2000G
Max. capacity	100g	200g	300g	600g	1000g	2000g
Min. capacity	0.02g			0.2g		
Division	0.001g	0.001g	0.001g	0.01g	0.01g	0.01g
Verification interval	0.01g	0.01g	0.01g	0.1g	0.1g	0.1g
Unit	g, ct, lb, oz, dr, gn, ozt, dwt					
Power supply	re-chargeable battery					
Dimension of pan	Ø9CM			Ø14CM		
Dimension	32x21x31cm					

SERIES WS ELECTRONIC WEIGHING SCALE

- LCD display, with backlight
- Overload and limits alarm
- RS232 output
- Automatic power off

VIDEO



WS15K

SPECIFICATION

Code	WS03K	WS06K	WS15K	WS30K
Max. capacity	3kg	6kg	15kg	30kg
Min. capacity	0.5g	0.5g	2.5g	5g
Division	0.1g	0.1g	0.5g	1g
Verification interval	1g	1g	5g	10g
Unit	kg, g, lb			
Power supply	9V AD/DC adapter			
Dimension of pan	32x23cm			
Dimension	32x36x11cm			

SERIES WT/WTS WEIGHT

Certificate

- With manufacturer inspection certificate

TOLERANCE

Weight	M1	F2	F1	E2
1-5mg	0.2mg	0.06mg	0.02mg	0.006mg
10mg	0.25mg	0.08mg	0.025mg	0.008mg
20mg	0.3mg	0.1mg	0.03mg	0.01mg
50mg	0.4mg	0.12mg	0.04mg	0.012mg
100mg	0.5mg	0.16mg	0.05mg	0.016mg
200mg	0.6mg	0.2mg	0.06mg	0.02mg
500mg	0.8mg	0.25mg	0.08mg	0.025mg
1g	1mg	0.3mg	0.1mg	0.03mg
2g	1.2mg	0.4mg	0.12mg	0.04mg
5g	1.6mg	0.5mg	0.16mg	0.05mg
10g	2mg	0.6mg	0.2mg	0.06mg
20g	2.5mg	0.8mg	0.25mg	0.08mg
50g	3mg	1mg	0.3mg	0.1mg
100g	5mg	1.6mg	0.5mg	0.16mg
200g	10mg	3mg	1mg	0.3mg
500g	25mg	8mg	2.5mg	0.8mg
1kg	50mg	16mg	5mg	1.6mg
2kg	100mg	30mg	10mg	3mg
5kg	250mg	80mg	25mg	8mg
10kg	500mg	160mg	50mg	16mg
20kg	1000mg	300mg	100mg	30mg



1kg



100g



100mg

GRADE SELECTION

Weighing instrument resolution	Grade selection
0.001mg	E1
0.01mg	E2
0.1mg	E2 or F1
1mg	F2
0.01g/0.1g	M1

INDIVIDUAL WEIGHT

Code / Weight	Grade and stainless steel type					Sharp
	M1(304)	F2(304)	F1(304)	F1(non-magnetic)	E2(non-magnetic)	
1mg	WT-M001M1	WT-M001F2	WT-M001F1	WT-M001F1B	WT-M001E2	sheet
2mg	WT-M002M1	WT-M002F2	WT-M002F1	WT-M002F1B	WT-M002E2	
5mg	WT-M005M1	WT-M005F2	WT-M005F1	WT-M005F1B	WT-M005E2	
10mg	WT-M010M1	WT-M010F2	WT-M010F1	WT-M010F1B	WT-M010E2	
20mg	WT-M020M1	WT-M020F2	WT-M020F1	WT-M020F1B	WT-M020E2	
50mg	WT-M050M1	WT-M050F2	WT-M050F1	WT-M050F1B	WT-M050E2	
100mg	WT-M100M1	WT-M100F2	WT-M100F1	WT-M100F1B	WT-M100E2	
200mg	WT-M200M1	WT-M200F2	WT-M200F1	WT-M200F1B	WT-M200E2	
500mg	WT-M500M1	WT-M500F2	WT-M500F1	WT-M500F1B	WT-M500E2	
1g	WT-001M1	WT-001F2	WT-001F1	WT-001F1B	WT-001E2	cylinder
2g	WT-002M1	WT-002F2	WT-002F1	WT-002F1B	WT-002E2	
5g	WT-005M1	WT-005F2	WT-005F1	WT-005F1B	WT-005E2	
10g	WT-010M1	WT-010F2	WT-010F1	WT-010F1B	WT-010E2	
20g	WT-020M1	WT-020F2	WT-020F1	WT-020F1B	WT-020E2	
50g	WT-050M1	WT-050F2	WT-050F1	WT-050F1B	WT-050E2	
100g	WT-100M1	WT-100F2	WT-100F1	WT-100F1B	WT-100E2	
200g	WT-200M1	WT-200F2	WT-200F1	WT-200F1B	WT-200E2	
500g	WT-500M1	WT-500F2	WT-500F1	WT-500F1B	WT-500E2	
1kg	WT-1000M1	WT-1000F2	WT-1000F1	WT-1000F1B	WT-1000E2	
2kg	WT-2000M1	WT-2000F2	WT-2000F1	WT-2000F1B	WT-2000E2	
5kg	WT-5000M1	WT-5000F2	WT-5000F1	WT-5000F1B	WT-5000E2	
10kg	WT-10000M1	WT-10000F2	WT-10000F1	WT-10000F1B	WT-10000E2	
20kg	WT-20000M1	WT-20000F2	WT-20000F1	WT-20000F1B	WT-20000E2	

WEIGHT SET

Code / Weight	Grade and stainless steel type					Quantity
	M1(304)	F2(304)	F1(304)	F1(non-magnetic)	E2(non-magnetic)	
1mg-100g	WTS-100M1	WTS-100F2	WTS-100F1	WTS-100F1B	WTS-100E2	21pcs
1mg-200g	WTS-200M1	WTS-200F2	WTS-200F1	WTS-200F1B	WTS-200E2	23pcs
1mg-500g	WTS-500M1	WTS-500F2	WTS-500F1	WTS-500F1B	WTS-500E2	24pcs
1mg-1kg	WTS-1000M1	WTS-1000F2	WTS-1000F1	WTS-1000F1B	WTS-1000E2	25pcs
1mg-2kg	WTS-2000M1	WTS-2000F2	WTS-2000F1	WTS-2000F1B	WTS-2000E2	27pcs
1mg-5kg	WTS-5000M1	WTS-5000F2	WTS-5000F1	WTS-5000F1B	WTS-5000E2	28pcs

Each set includes two pieces 2mg/20mg/200mg/2g/20g/200g/2kg (if it is in the range) and one piece each other sizes

CUTM600 LOW SPEED PRECISION CUTTING MACHINE

- The equipment is equipped with a 4 kinds of fixture, which can make the processed objects position and cut at the best angle
- Equipped with limit switch, can realize unattended processing, high precision spindle operation
- Accurately fine-tune the horizontal feed position of the processed objects, and automatically stop running after cutting.



SPECIFICATION

Travel of mobile frame	25mm
Positioning accuracy	0.01mm
Spindle rotation speed	0-600r/min
Cutting blade diameter	Ø100x0.4x12.7mm
Max. cutting diameter	Ø30mm
Power	110/220V
Power consumption	50W
Weight	19.4kg
Dimension	392x330x310mm

INCLUDED ACCESSORIES

Main unit	1pc
Spanner	1pc
Wrench	1pc
Fixture	1 set
Diamond cutting blade	1pc

GP203 MANUAL GRINDING POLISHING MACHINE

- One machine is multi-purpose, easy to complete the metallographic sample pre-grindingrough grinding, fine grinding, rough polishing and fine polishing
- Double disc double control, Variable speed regulation and two fixed speed, speed control system optimized for grinding and polishing machine
- Easy to control the switch knob, simple operation
- Fine grinding and surface treatment of the work disc, to ensure that the surface of the sample is smooth



SPECIFICATION

Polishing disc diameter (mm)	203
Rotation speed (rpm)	variable adjustable speed 50-600
Working disc rotation direction	clockwise and counter clockwise
Control method	double disc double control
Motor power	550Wx2
Input voltage	100-240V
Weight	50kg
Dimension	566x712x270mm

INCLUDED ACCESSORIES

Main unit	1pc
Polishing velvet	2pcs
Metallographic sandpaper	2pcs
Water pipe	1 set
Power cable	1pc

CODE INDEX

CODE	NAME	PAGE
100-197		
100	USB OUTPUT INTERFACE	2
101	DIAL CALIPER	14-15
103	DIAL CALIPER	16
104	INSIDE GROOVE DIAL CALIPER	37
105	LEFT HAND VERNIER CALIPER	49
106	DIGITAL CALIPER WITH LARGE SCREEN	10-11
107	DIGITAL CALIPER WITH LONG UPPER JAWS	53
109	INSIDE GROOVE CALIPER	37
110	LEFT HAND DIGITAL CALIPER	49
111	DIGITAL CALIPER	4-8
112	IP67 WATERPROOF DIGITAL CALIPER	8-10
113	FRACTIONAL DIGITAL CALIPER	12
114	MINI DIGITAL CALIPER	12
115	DIGITAL CALIPER	46
116	DIGITAL CALIPER WITH CARBIDE TIPPED JAWS	47
117	PLASTIC DIGITAL CALIPER	13
118	DIGITAL CALIPER	20-21
119	DIGITAL CALIPER	22
120	VERNIER CALIPER	16-17
120	VERNIER CALIPER(SOLID TYPE)	27
121	MINI VERNIER CALIPER	19
122	VERNIER CALIPER	28
123	VERNIER CALIPER(ANTI MAGNETIC)	13
124	VERNIER CALIPER	18
125	VERNIER CALIPER	18
126	VERNIER CALIPER	24
127	VERNIER CALIPER	25
128	VERNIER CALIPER	26
129	VERNIER CALIPER	27
130	DIGITAL CALIPER	23
131	DIGITAL CALIPER	23
132	DIGITAL INSIDE GROOVE CALIPER	34-35
133	DIGITAL OUTSIDE NECK CALIPER	29
134	DIGITAL OUTSIDE POINT CALIPER	30
135	DIGITAL INSIDE NECK CALIPER	31
136	DIGITAL INSIDE POINT CALIPER	32
136	DIGITAL INSIDE POINT CALIPER	34
137	DIGITAL TUBE THICKNESS CALIPER	35
138	DIGITAL POINT CALIPER	45
139	DIGITAL INSIDE KNIFE-EDGE CALIPER	36
140	VERNIER CALIPER WITH CARBIDE TIPPED JAWS	47
141	DIGITAL BACK-JAW CENTERILINE CALIPER	43
142	DIGITAL RTJ RING GROOVE CALIPER	54
143	OUTSIDE NECK VERNIER CALIPER	29
144	OUTSIDE POINT VERNIER CALIPER	30
145	INSIDE NECK VERNIER CALIPER	31
146	INSIDE POINT VERNIER CALIPER	33
147	BACK-JAW DIGITAL EDGE TO CENTER CALIPER	44
148	DIGITAL CENTERLINE/EDGE TO CENTER CALIPER	44
149	CALIPER WITH INTERCHANGEABLE POINTS	39-41
150	DIGITAL CALIPER	20
151	DIGITAL OFFSET CENTERLINE CALIPER	42
152	DIGITAL OFFSET CALIPER	48
153	DIGITAL BLADE CALIPER	46
154	DIGITAL HOOK CALIPER	50
155	DIGITAL SCRIBING CALIPER	373
156	DIGITAL GEAR TOOTH CALIPER	57
157	DIGITAL DISK BRAKE CALIPER	58
158	DIGITAL DRUM BRAKE CALIPER	59
159	DIGITAL INSIDE GROOVE CALIPER	36
160	CHAMFER GAUGE	331
161	OFFSET CENTERLINE VERNIER CALIPER	43
162	OFFSET VERNIER CALIPER	48
163	DIGITAL CHAMFER GAUGE	332
164	DIGITAL CHAMFER GAUGE	332
165	DIGITAL DISK BRAKE AND PAD CALIPER	58
166	VERNIER GEAR TOOTH CALIPER	57
167	DIGITAL CALIPER WITH LARGE MEASURING FACES	52
168	DIGITAL SMALL POINT CALIPER	45
169	DIGITAL ARC RADIUS CALIPER	52
170	EXTENSION BASE FOR DEPTH CALIPER	69
171	DIGITAL DEPTH CALIPER	62
172	DIGITAL PIN DEPTH CALIPER	63
173	DIGITAL HOOK DEPTH CALIPER	63
174	DIGITAL DOUBLE HOOK DEPTH CALIPER	64
175	VERNIER DEPTH CALIPER	67
176	DIGITAL DEPTH CALIPER	69-70
176	VERNIER DEPTH CALIPER	70
177	VERNIER DEPTH CALIPER	67
178	VERNIER DEPTH CALIPER	68
179	ACCESSORY FOR CALIPER	60
179	DIAL DEPTH CALIPER	66
180	SCRIBER FOR HEIGHT GAGE	88

CODE	NAME	PAGE
181	DIGITAL HEIGHT GAGE	84
182	DIGITAL HEIGHT GAGE	86
183	MINI DIGITAL HEIGHT GAGE	88-89
184	DIGITAL HEIGHT GAGE WITH DRIVING WHEEL	85
185	DIAL HEIGHT GAGE	86
186	VERNIER HEIGHT GAGE	87
187	MINI VERNIER HEIGHT GAGE	89-90
189	DIAL HEIGHT GAGE	90
191	DIGITAL DEPTH CALIPER WITH HOLES	64
192	VERNIER HOOK DEPTH CALIPER	68
193	DIGITAL DEPTH CALIPER WITH ROUND DEPTH BAR	65
194	DIGITAL DEPTH CALIPER WITH ROUND DEPTH BAR	66
195	DIGITAL KEYWAY GAUGE	333
196	DIGITAL KEYWAY GAUGE	334
197	IP67 WATERPROOF DIGITAL DEPTH CALIPER	61
200-299		
200	USB OUTPUT INTERFACE	2
200	USB OUTPUT INTERFACE	3
201	LINEAR GAUGE	177
205	LINEAR GAUGES AND DISPLAY UNIT	180
206	DISPLAY UNIT FOR LINEAR GAUGE	178
208	COUNTER FOR LINEAR GAUGE	179
210	DIGITAL INDICATOR	181
211	DIGITAL INDICATOR	181
212	DIGITAL INDICATOR	182
213	WATERPROOF DIGITAL INDICATOR	184
214	DIGITAL INDICATOR	185
215	DIGITAL INDICATOR FOR BORE GAUGE	190
216	DIGITAL INDICATOR	183
217	HIGH PRECISION DIGITAL INDICATOR	186-187
218	HIGH PRECISION DIGITAL INDICATOR	188-189
221	DIAL INDICATOR	192
222	DIAL INDICATOR	191
222	DIAL INDICATOR	193
223	DIAL INDICATOR	193
224	DIAL INDICATOR	194
225	INCH DIAL INDICATOR	201
226	SHOCKPROOF DIAL INDICATOR	194
227	DIGITAL INDICATOR WITH LIFTING LEVER	190
228	DIAL INDICATOR	192
228	DIAL INDICATOR	195
229	DIAL INDICATOR	196-197
230	DIAL INDICATOR	200
231	WATERPROOF DIAL INDICATOR	198
232	ONE REVOLUTION DIAL INDICATOR	199
233	DOUBLE FACE DIAL INDICATOR	199
240	SPLIT TYPE DIAL BORE GAUGE SET	168
240	SPLIT TYPE DIAL BORE GAUGE SET	169-170
241	DIGITAL BORE GAUGE	163-164
243	BORE GAUGE	166
244	BORE GAUGE	166
245	LARGE DIAMETER DIAL BORE GAUGE	165
249	BORE GAGE FOR BLIND HOLES	167
250	ANVIL FOR BORE GAUGES/LONG HANDLE	172
251	DIAL BORE GAUGE SET	160
251	DIAL BORE GAUGE	161-162
252	INCH DIAL BORE GAUGE	171
253	BORE GAUGE	166
254	BORE GAUGE	166
255	BORE GAUGE CHECKER	173
256	BORE GAUGE SETTER	173
260	STYLI FOR DIAL TEST INDICATOR	207
261	DIAL TEST INDICATOR	202-204
261	CLAMP FOR DIAL TEST INDICATOR	207
263	LONG STYLI DIAL TEST INDICATOR	205
264	BACK PLUNGER TYPE DIAL TEST INDICATOR	205
265	DIAL TEST INDICATOR	206
266	LARGE RANGE DIAL TEST INDICATOR	206
267	HOLDER FOR INDICATOR	208
268	UNIVERSAL HOLDER FOR INDICATOR	208
269	DIAL TEST INDICATOR CENTERING HOLDER	209
270	CONTACT POINTS	210-215
270	ROLLER POINT	215
270	POINT SET	215
270	EXTENSION ROD FOR CONTACT POINTS	216
271	SPINDLE LIFT KNOB	216
272	LUG AND FLAT BACK	217
272	MAGNETIC BACK	217
273	SHAFT SLEEVE	209
274	DIAL TEST INDICATOR HOLDER	209
276	LARGE LOCKING FORCE MAGNETIC STAND	223
277	HYDRAULIC UNIVERSAL MAGNETIC STAND	222
278	UNIVERSAL MAGNETIC STAND	222
279	UNIVERSAL MAGNETIC STAND	221

CODE INDEX

CODE	NAME	PAGE
280	MEASURING TOOL SET	411-416
280	WELDING TOOL SET	417
281	MAGNETIC STAND	219
282	UNIVERSAL MAGNETIC STAND	220
283	UNIVERSAL MAGNETIC STAND	221
284	VACUUM STAND	225
285	FLEX ARM MAGNETIC STAND	225
286	MINI MAGNETIC STAND	224
287	UNIVERSAL STAND	226
288	MINI MAGNETIC STAND	224
289	INDICATOR STAND WITH GRANITE BASE	226
289	GRANITE DIAL INDICATOR STAND	227
290	INDICATOR STAND WITH CERAMIC BASE	228
291	DIAL DEPTH INDICATOR	76
291	REVERSE DIAL INDICATOR	200
292	DIAL DEPTH INDICATOR	76
292	REVERSE DIAL INDICATOR	201
293	DIGITAL DEPTH INDICATOR	73-75
294	INDICATOR STAND	229
295	DIAL DEPTH INDICATOR	77
296	DIGITAL RADIUS GAUGE	174
297	CENTERING INDICATOR	401
298	CRANKSHAFT TESTER	259
299	DIGITAL DEPTH INDICATOR	77
300-399		
300	USB OUTPUT INTERFACE	2
301	NON ROTATING SPINDLE MICROMETER	125
301	UNIVERSAL MICROMETER TIPS	126
302	DIGITAL UNIVERSAL MICROMETER	124
303	QUICK FEEDING DIGITAL OUTSIDE MICROMETER	94
304	DIGITAL GEAR TOOTH MICROMETER	128
305	NON MAGNETIC MICROMETER	136
306	DISK BRAKE MICROMETER	137
307	DIGITAL DISK BRAKE MICROMETER	137
308	LARGE ANVIL MICROMETER	123
310	OUTSIDE MICROMETER FOR LEFT OR RIGHT HAND	126
312	DIGITAL OUTSIDE MICROMETER	93
313	DIGITAL OUTSIDE MICROMETER	91-92
314	DIGITAL SNAP MICROMETER	95
315	MICROMETER WITH INTERCHANGEABLE ANVILS	99
316	DIGITAL BLADE MICROMETER	106
317	DIGITAL POINT MICROMETER	108
318	DIGITAL SPLINE MICROMETER	109
319	DIGITAL CRIMP HEIGHT MICROMETER	111
319	DIGITAL POINT MICROMETER	112
320	MINI OUTSIDE MICROMETER	98
321	OUTSIDE MICROMETER	96
321	MICROMETER SETTING STANDARD	141
322	MICRO GRADUATION OUTSIDE MICROMETER	97
323	OUTSIDE MICROMETER	97
324	OUTSIDE MICROMETER	98
324	INCH MICROMETER SETTING STANDARD	142
325	INTERCHANGEABLE ANVILS MICROMETER	100-101
326	BLADE MICROMETER	107
327	POINT MICROMETER	108
328	SPLINE MICROMETER	110
329	OUTSIDE MICROMETER WITH EXTENSION ANVIL	102
330	JAW TYPE MICROMETER	121
331	DIGITAL SPHERICAL ANVIL TUBE MICROMETER	112
332	NON ROTATING SPINDLE DISK MICROMETER	114
333	DIGITAL SCREW THREAD MICROMETER	119
334	DIGITAL V-ANVIL MICROMETER	116
334	V-ANVIL MICROMETER	117
335	LIMIT MICROMETER	119
336	SHEET METAL MICROMETER	120
337	HUB MICROMETER	123
338	DIGITAL CALIPER TYPE MICROMETER	122
339	DIGITAL JAW TYPE MICROMETER	121
340	SPHERICAL ANVIL TUBE MICROMETER	113
341	TUBE MICROMETER	114
342	DISK MICROMETER	115
343	SCREW THREAD MICROMETER	118
343	MEASURING TIPS FOR MICROMETER	118
343	MICROMETER SETTING STANDARD	142
344	GROOVE MICROMETER	130
345	GEAR TOOTH MICROMETER	129
345	BALL TIPS FOR GEAR TOOTH MICROMETER	129
346	CRIMP HEIGHT MICROMETER	111
347	SHEET METAL MICROMETER	135
348	CAN SEAM MICROMETER	131
349	INDICATING MICROMETER	133
349	DIAL SNAP GAUGE	134
350	DIGITAL SHEET METAL MICROMETER	120
351	INISIDE MICROMETER	154-155

CODE	NAME	PAGE
352	TUBULAR INSIDE MICROMETER	155-156
353	TUBULAR INSIDE MICROMETER	157
354	TUBULAR INSIDE MICROMETER	157
355	TUBULAR INSIDE MICROMETER	158
356	DIGITAL INISIDE MICROMETER	153
357	TUBULAR INSIDE MICROMETER	158
358	SCREW THREAD MICROMETER/MEASURING TIPS	159
359	DIGITAL TUBULAR INSIDE MICROMETER	156
361	DIGITAL THREE POINTS INSIDE MICROMETER	147
361	DIGITAL TWO POINTS INSIDE MICROMETER	148
361	DIGITAL POINTS INSIDE MICROMETER SET	148
362	THREE POINTS INSIDE MICROMETER	149
362	TWO POINTS INSIDE MICROMETER	150
362	POINTS INSIDE MICROMETER SET	150
363	THREE POINTS INTERNAL MICROMETER	151
364	THREE POINTS INTERNAL MICROMETER	151
365	PISTOL GRIP THREE POINTS BORE GAUGE	152
369	QUICK FEEDING OUTSIDE MICROMETER	136
370	WIRE MICROMETER	135
371	MICROMETER HEAD	139
373	MICROMETER HEAD	140
376	DIGITAL MICROMETER HEAD	138
377	INTERCHANGEABLE ANVIL MICROMETER	127
378	CALIPER TYPE MICROMETER	122
379	LONG SPINDLE OUTSIDE MICROMETER	135
380	DIGITAL CYLINDRICAL ANVIL TUBE MICROMETER	113
381	MICROMETER STAND	145
383	MICROMETER STAND	146
387	MICROMETER MEASURING FORCE DETECTOR	144
388	DIGITAL GEAR ROOT DIAMETER MICROMETER	104
389	ELECTRONIC INDICATING MICROMETER	132
390	OUTSIDE MICROMETER WITH COUNTER	95
391	DEPTH MICROMETER	72
392	DEPTH MICROMETER	72
395	DIGITAL DEPTH MICROMETER	71
397	DIGITAL INTERCHANGEABLE ANVIL MICROMETER	127
398	GEAR ROOT DIAMETER MICROMETER	105
399	DEPTH MICROMETER CHECKERS	78
400-499		
400	USB OUTPUT INTERFACE	2
401	UNIVERSAL GAUGE	174
406	LARGE RANGE DIGITAL RADIUS GAUGE	175
410	DIGITAL INTERNAL CALIPER GAUGE	232
411	INTERNAL DIAL CALIPER GAUGE	233
412	DIGITAL INTERNAL CALIPER GAUGE	235
413	INTERNAL DIAL CALIPER GAUGE	235
419	DIGITAL INTERNAL CALIPER GAUGE	240
420	DIGITAL EXTERNAL CALIPER GAUGE	234
421	EXTERNAL DIAL CALIPER GAUGE	234
422	DIGITAL EXTERNAL CALIPER GAUGE	236
423	EXTERNAL DIAL CALIPER GAUGE	236
425	EXTERNAL DIAL CALIPER GAUGE	238
426	INTERNAL DIAL CALIPER GAUGE	239
428	EXTERNAL DIAL CALIPER GAUGE	237-238
429	DIGITAL EXTERNAL CALIPER GAUGE	241
430	MICROMETER WITH DIAL INDICATOR	103
430	MICROMETER WITH DIAL INDICATOR	134
431	DIAL SNAP GAUGE	243
432	DIGITAL SNAP GAUGE	257
433	DIGITAL SNAP GAUGE	257
434	DIGITAL SNAP GAUGE	258
435	DIGITAL SNAP GAUGE	258
436	DIGITAL 3-PURPOSE SNAP GAUGE	259
437	STEP AND GAP GAUGE	336
438	DIAL HEIGHT GAUGE	336
440	TUBE THICKNESS GAUGE	249; 250
441	THICKNESS GAUGE	245
442	HIGHT PRECISION DIGITAL THICKNESS GAUGE	244
443	THICKNESS GAUGE	246
444	THICKNESS GAUGE	248
445	THICKNESS GAUGE WITH ROLLING WHEEL	253
446	THICKNESS GAUGE	254
447	THICKNESS GAUGE	256
448	THICKNESS GAUGE	251
449	THICKNESS GAUGE	252
450	PET BOTTLE WALL THICKNESS GAUGE	256
451	THICKNESS GAUGE	242
452	THICKNESS GAUGE	242
453	THICKNESS GAUGE WITH POINTED TIPS	242
455	THICKNESS GAUGE	240
457	DIGITAL THICKNESS GAUGE	241
460	DIGITAL THICKNESS GAUGE	247
461	DIGITAL TUBE THICKNESS GAUGE	249
462	DIGITAL TUBE THICKNESS GAUGE	250

CODE INDEX

CODE	NAME	PAGE
463	DIGITAL TUBE THICKNESS GAUGE	252
464	POINT THICKNESS GAUGE	251
465	DIGITAL THICKNESS GAUGE	254
467	DIGITAL ROLLER THICKNESS GAUGE	253
469	DIGITAL THICKNESS GAUGE	255
470	DIAL COMPARATORE	191
480	DIGITAL DEPTH GAUGE (60°KNIFE EDGE BASE)	78
485	BASE FOR HEIGHT GAUGE	337
489	DIGITAL SURFACE PROFILE GAUGE	503-504
489	SURFACE PROFILE GAUGE	504
499	DIAL INDICATOR TESTER	218
508-595		
508	GAUGE BLOCK FOR MICROMETER INSPECTION	268
510	GAUGE BLOCK HOLDER	271
511	CERAMIC GAUGE BLOCK SET	260
512	CARBIDE GAUGE BLOCK SET	261
512	STEEL GAUGE BLOCK SET	262-263
513	STEEL INDIVIDUAL GAUGE BLOCK	264
514	STEEL INDIVIDUAL GAUGE BLOCK	265
515	CERAMIC INDIVIDUAL GAUGE BLOCK	263
516	CERAMIC INDIVIDUAL GAUGE BLOCK	264
517	GAUGE BLOCK SET FOR CALIPER INSPECTION	266
518	GAUGE BLOCK SET FOR MICROMETER	267-268
519	GAUGE BLOCK ACCESSORIES	269
520	GAUGE BLOCK ACCESSORIES	270
521	PIN GAUGE HANDLE	276
522	INDIVIDUAL PIN GAUGE	274
522	INDIVIDUAL CARBIDE PIN GAUGE	275
523	CARBIDE PIN GAUGE SET	276
523	PIN GAUGE SET	277-278
524	BOX FOR PIN GAUGE SET	280
525	MASTER SETTING DISC	281
526	STEEL BALL SET	280
528	INDIVIDUAL CERAMIC PIN GAUGE	275
528	CARBIDE PIN GAUGE SET	279
529	THREE WIRE MEASURING UNITS	281
530	3-WIRES	143
531	SETTING RING	282-283
532	THREAD RING GAUGE	288
533	THREAD RING GAUGE	288
534	FINE THREAD RING GAUGE	289
535	FINE THREAD RING GAUGE	289
535	WITHWORTH PIPE THREAD GAUGE(G SERIES)	298
536	WITHWORTH PIPE THREAD GAUGE(G SERIES)	298
537	AMERICAN STANDARD THREAD RING GAUGE	296
538	AMERICAN STANDARD THREAD RING GAUGE	296
541	PLAIN PLUG GAUGE	284
541	CARBIDE PLAIN PLUG GAUGE	285
542	THREAD PLUG GAUGE	290
542	CHECK PLUGS FOR THREAD RING GAUGE	292
543	FINE THREAD PLUG GAUGE	291
543	CHECK PLUGS FOR THREAD RING GAUGE	293-295
544	NPT THREAD GAUGE	297
545	WITHWORTH PIPE THREAD GAUGE(G SERIES)	298
547	AMERICAN STANDARD THREAD PLUG GAUGE	296
551	OPTICAL PARALLEL	144-145
552	GLASS SCALE	458
553	OPTICAL FLAT	144
558	DIGITAL THREAD DEPTH GAUGE	300
559	THREAD DEPTH GAUGE	301
560	CALIPER/HEIGHT GAUGE CHECKERS	272
561	CHECK MASTER	271
570	ANGLE GAUGE BLOCK SET	273
571	ANGLE GAUGE BLOCK SET	273
571	ANGLE GAUGE BLOCK SET	394
572	ANGLE BLOCK SET	274
575	CERAMIC SETTING RING	283
582	ADJUSTABLE SNAP GAUGE	287
585	KEY SLOT LIMIT GAUGE	286
589	LIMIT SNAP GAUGE	286
594	AIR GAUGE	300
595	AIR GAUGE DISPLAY	299
600-697		
600	PARALLEL/SQUARE SETS	393
610	PERMANENT MACNETIC CHUCK	391
611	GRANITE SURFACE PLATE	380
615	MAGNETIC INDUCTION PARALLEL SET	393
619	ADJUSTABLE ANGLE BLOCK	395
621	STAND FOR GRANITE SURFACE PLATE	381
625	JACK SET FOR GRANITE SURFACE PLATE	381
627	MAGNETIC V BLOCK	382
628	ROLLER BEARING V-BLOCK SET	390
629	MAGNETIC INDUCTION V-BLOCK SET	391
630	V-BLOCK SET	390

CODE	NAME	PAGE
631	GRANITE V-BLOCK SET	386
632	V-BLOCK SET	387
633	MAGNETIC V-BLOCK	383
634	MAGNETIC V-BLOCK	384-385
635	MAGNETIC V-BLOCK SET	386
636	V-BLOCK SET	387
637	V-BLOCK SET	388
638	V-BLOCK SET	388
639	V-BLOCK	389
640	V-BLOCK SET	389
641	PARALLEL SET	392
642	GRANITE STRAIGHT EDGE	319
643	GRANITE SQUARE	317
644	GRANITE SQUARE	317
645	GRANITE SQUARE AND V-BLOCK	318
646	UNIVERSAL ANGLE PLATE SET	394
647	MAGNALIUM STRAIGHT EDGES	320
648	GRANITE PARALLEL SET	319
649	MAGNETIC SQUARE AND V-BLOCK	318
651	SINE BAR	395
652	PRECISION VISE	396
653	PRECISION VISE	397-398
656	PRECISION UNIVERSAL VISE	398
657	PRECISION SINE VISE	399
660	CONCENTRICITY GAUGE	229
661	QUICK POSITIONING CONCENTRICITY GAUGE	230
662	CONCENTRICITY GAUGE	230
662	BENCH CENTER	231
663	BENCH CENTER	231
675	GRANITE DIAL INDICATOR STAND	228
680	3D TESTER	400
685	DIAL TEST INDICATOR CENTERING HOLDER	401
686	INDICATAOR CENTERING HOLDER	402
688	EDGE FINDER(WITH ROTARY HEAD)	407
689	NON-MAGNETIC EDGE FINDER	406
690	NON-MAGNETIC EDGE FINDER(DOUBLE HEAD)	407
691	CERAMIC EDGE FINDER	403-404
692	ELECTRONIC EDGE FINDER	402
693	NON-MAGNETIC EDGE FINDER	403
694	EDGE FINDER	404-406
695	ZERO SET	410
696	ZERO SET	411
697	DIGITAL ZERO SETTER	410
710-796		
710	MINI LEVEL	324
711	FRAME LEVEL	325
713	BLOCK LEVEL	323
714	OPTICAL IMAGE LEVEL	326
715	BLOCK LEVEL	324
718	BUILT-IN BLUETOOTH BLOCK LEVEL	326
721	DIGITAL LEVEL	327
722	DIGITAL LEVEL	327
723	DIGITAL LEVEL	328
725	DIGITAL LEVEL	330
726	DIGITAL PROTRACTOR	303
730	DIGITAL LEVEL	329
731	DIGITAL LEVEL	328
740	WET FILM GAUGE	513
741	U.S. STANDARD SHEET METAL GAUGE	365
741	U.S. STANDARD SHEET WIRE GAUGE	365
742	THICKNESS GAUGE	366
745	FILLET WELDING GAUGE	360
746	WELDING GAUGE	363
747	WELDING GAUGE	363
748	PIPE PIT GAUGE	364
749	WELDING GAUGE	360
750	ROLLER WET FILM THICKNESS GAUGE	514
790	TELESCOPING MAGNETIC PICK-UP	425
795	TELESCOPING INSPECTION MIRROR	426
796	TELESCOPING INSPECTION MIRROR WITH LED	426
800-899		
800	WIRELESS DATA TRANSFER SYSTEM	1
809	MOVABLE WORKBENCH	3
811	PROTRACTOR	307
812	PROTRACTOR	308
813	PROTRACTOR	308
814	UNIVERSAL PROTRACTOR	302
815	UNIVERSAL PROTRACTOR	302
816	UNIVERSAL PROTRACTOR	303
817	COMBINATION SQUARE SET	306
821	DIGITAL PROTRACTOR	305
822	DIGITAL PROTRACTOR	301
823	DIGITAL PROTRACTOR	304
824	DIGITAL PROTRACTOR	304

CODE INDEX

CODE	NAME	PAGE
831	ADJUSTABLE SQUARE	313
832	90° BEVELED EDGE SQUARE	309
833	90° TOOL MAKER SQUARE	313
838	CYLINDER SQUARE	313
839	SQUARE SET	312
840	90° BEVELED EDGE SQUARE WITH WIDE BASE	309
841	90° FLAT EDGE SQUARE	310
842	90° FLAT EDGE SQUARE WITH WIDE BASE	310
843	90° FLAT EDGE SQUARE WITH WIDE BASE	311
845	MACHINIST SQUARE WITH WIDE BASE	312
846	45° SQUARE	314
847	60° SQUARE	315
848	120° SQUARE	316
849	135° SQUARE WITH WIDE BASE	316
850	MACHINIST SQUARE	311
856	45° SQUARE WITH WIDE BASE	314
857	60° SQUARE WITH WIDE BASE	315
865	STRAIGHTNESS GAUGE	322
870	CALIPER WITH INTERCHANGEABLE POINTS	38
880	CALIPER END GRINDING MACHINE	59
881	CALIPER/MICROMETER LAPPING MACHINE	60
885	DIAL CALIPER FOR BORES WITH BARRRIER INSIDE	56
890	DIGITAL INSIDE GROOVE CALIPER	55
891	V SHAPE VERNIER CALIPER	51
895	DIGITAL CALIPER FOR BORES	56
896	DIGITAL V SHAPE CALIPER	51
899	DIGITAL CALIPER WITH POSITIONING SURFACES	53
900-999		
900	SCRIBING CALIPER	374
901	SCRIBING CALIPER	374
902	T-SHAPE MARKING GAUGE	375
903	HEIGHT SCRIBER	375
906	PRECISION STRAIGHT EDGE	321
907	PRECISION STRAIGHT EDGE WITH BEVELED EDGE	321
909	POCKET RULE WITH SLIDING CLIP	371
911	FEELER	338
912	FEELER	338
913	FEELER	339
914	FEELER	339
915	FEELER	339
916	FEELER TAPE	339
917	INCH FEELER GAUGE	340
919	OFFSET DUAL SCALE FEELER GAUGE	340
921	PITCH GAUGE	341
922	PITCH GAUGE	341
923	PITCH GAUGE	341
924	PITCH GAUGE	341
925	PITCH GAUGE	341
926	CENTER GAUGE	342
927	THREAD GAUGE	342
930	ANGLE GAUGE	343
931	ANGLE GAUGE	344
932	ANGLE GAUGE SET	345
933	ANGLE GAUGE	343
934	ANGLE GAUGE	344
940	GAP/DIAMETER GAUGE	366
941	RADIUS GAUGE	345
942	RADIUS GAUGE	346
951	TELESCOPING GAUGE SET	346
952	SMALL HOLE GAUGE SET	347
953	LONG HANDLE TELESCOPING GAUGE	348
955	CIRCUMFERENCE TAPE	176
956	CIRCUMFERENCE TAPE	176
959	DIGITAL MEASURING WHEEL	373
960	PIP WELDING GAUGE	359
961	TAPER GAUGE	349
962	TAPER GAUGE	349
962	TAPER GAUGE SET	350
963	DIGITAL TAPER GAUGE	348
964	TAPER BORE GAUGE	351
965	DRILL POINT GAUGE	364
966	WELDING GAUGE	361
967	CHAMFER GAUGE	333
968	DRILL ANGLE GAUGE	364
969	FILLET WELDING GAUGE	362
970	DIGITAL WELDING GAUGE	351
971	WELDING GAUGE	352
972	WELDING GAUGE	352
973	WELDING GAUGE	353
974	WELDING GAUGE	354
975	WELDING GAUGE	355-357
976	PIPE WELDING GAUGE	358
977	FILLET WELD GAUGE	359
978	WELDING GAUGE	361

CODE	NAME	PAGE
979	WELDING GAUGE	362
981	INSIDE CALIPER	367
982	INSIDE SPRING CALIPER	367
983	OUTSIDE CALIPER	368
984	OUTSIDE SPRING CALIPER	368
985	SPRING DIVIDER	369
986	DIVIDER	369
987	SPRING DIVIDER	370
988	MEASURING WHEEL	372
989	MEASURING TAPE	372
990	STEEL RULE	370-371
991	STRAIGHT EDGE RULE	321
992	MARKING GAUGE	376
993	CENTER MARKING GAUGE	376
994	STRAIGHT EDGE	320
995	SCRIBER	377
996	DIGITAL HORIZONTAL SCALE	378
997	DIGITAL VERTICAL SCALE	379
998	VERNIER STEP GAUGE	334
999	DIGITAL STEP GAUGE	335
999	MINI DIGITAL HEIGHT GAUGE	335
1300		
1300KPA	CAMERA	458
A		
AccuGage1000	2D HEIGHT GAGE	80-81
AccuGage700	2D HEIGHT GAGE	80-81
AccuHite1000	1D HEIGHT GAGE	82-83
AccuHite700	1D HEIGHT GAGE	82-83
AM30	DIGITAL ANEMOMETER	533
B		
BLK-HB1	STANDARD HARDNESS BLOCK	492
BLK-HB1B	STANDARD HARDNESS BLOCK	492
BLK-HB1C	STANDARD HARDNESS BLOCK	492
BLK-HB2	STANDARD HARDNESS BLOCK	492
BLK-HB2B	STANDARD HARDNESS BLOCK	492
BLK-HB3	STANDARD HARDNESS BLOCK	492
BLK-HB3B	STANDARD HARDNESS BLOCK	492
BLK-HB4	STANDARD HARDNESS BLOCK	492
BLK-HB4B	STANDARD HARDNESS BLOCK	492
BLK-HB5	STANDARD HARDNESS BLOCK	492
BLK-HB6	STANDARD HARDNESS BLOCK	492
BLK-HB7	STANDARD HARDNESS BLOCK	492
BLK-HBA1	STANDARD HARDNESS BLOCK	492
BLK-HBA2	STANDARD HARDNESS BLOCK	492
BLK-HK005	STANDARD HARDNESS BLOCK	492
BLK-HK01	STANDARD HARDNESS BLOCK	492
BLK-HK01B	STANDARD HARDNESS BLOCK	492
BLK-HK02	STANDARD HARDNESS BLOCK	492
BLK-HK02B	STANDARD HARDNESS BLOCK	492
BLK-HK03	STANDARD HARDNESS BLOCK	492
BLK-HK05	STANDARD HARDNESS BLOCK	492
BLK-HK1	STANDARD HARDNESS BLOCK	492
BLK-HLD	STANDARD HARDNESS BLOCK	492
BLK-HLD2	STANDARD HARDNESS BLOCK	492
BLK-HLD3	STANDARD HARDNESS BLOCK	492
BLK-HLG1	STANDARD HARDNESS BLOCK	492
BLK-HLG2	STANDARD HARDNESS BLOCK	492
BLK-HR15N	STANDARD HARDNESS BLOCK	492
BLK-HR15T	STANDARD HARDNESS BLOCK	492
BLK-HR30N	STANDARD HARDNESS BLOCK	492
BLK-HR30NB	STANDARD HARDNESS BLOCK	492
BLK-HR30T	STANDARD HARDNESS BLOCK	492
BLK-HR45N	STANDARD HARDNESS BLOCK	492
BLK-HR45T	STANDARD HARDNESS BLOCK	492
BLK-HRA1	STANDARD HARDNESS BLOCK	492
BLK-HRA2	STANDARD HARDNESS BLOCK	492
BLK-HRB1	STANDARD HARDNESS BLOCK	492
BLK-HRB2	STANDARD HARDNESS BLOCK	492
BLK-HRC1	STANDARD HARDNESS BLOCK	492
BLK-HRC2	STANDARD HARDNESS BLOCK	492
BLK-HRC3	STANDARD HARDNESS BLOCK	492
BLK-HRC4	STANDARD HARDNESS BLOCK	492
BLK-HRC5	STANDARD HARDNESS BLOCK	492
BLK-HRCU	STANDARD HARDNESS BLOCK	492
BLK-HSA	STANDARD HARDNESS BLOCK	492
BLK-HSD	STANDARD HARDNESS BLOCK	492
BLK-HV1	STANDARD HARDNESS BLOCK	492
BLK-HV1H	STANDARD HARDNESS BLOCK	492
BLK-HV1T	STANDARD HARDNESS BLOCK	492
BLK-HV2	STANDARD HARDNESS BLOCK	492
BLK-HV3	STANDARD HARDNESS BLOCK	492
BLK-HV30	STANDARD HARDNESS BLOCK	492
BLK-HV4	STANDARD HARDNESS BLOCK	492
BLK-HV50	STANDARD HARDNESS BLOCK	492

CODE INDEX

CODE	NAME	PAGE
BLK-HV5U	STANDARD HARDNESS BLOCK	492
BLK-HWA1	STANDARD HARDNESS BLOCK	492
BLK-HWA2	STANDARD HARDNESS BLOCK	492
BLK-MHV1	STANDARD HARDNESS BLOCK	492
BLK-MHV2	STANDARD HARDNESS BLOCK	492
BLK-MHV21	STANDARD HARDNESS BLOCK	492
BLK-MHV3	STANDARD HARDNESS BLOCK	492
BLK-MHV31	STANDARD HARDNESS BLOCK	492
BLK-MHV4	STANDARD HARDNESS BLOCK	492
BLK-MHV5	STANDARD HARDNESS BLOCK	492
BLK-MHV6	STANDARD HARDNESS BLOCK	492
BLK-MHV61	STANDARD HARDNESS BLOCK	492
BLK-MHV62	STANDARD HARDNESS BLOCK	492
C		
CAT12	CROSS CUT ADHESION TESTER	538
CF1000S	COATING THICKNESS GAUGE (BASIC TYPE)	511
CF1250	COATING THICKNESS GAUGE	512
CF1500	COATING THICKNESS GAUGE	510
CF1500H	COATING THICKNESS GAUGE	510
CFN10000B	COATING THICKNESS GAUGE	513
CFN1000S	COATING THICKNESS GAUGE (BASIC TYPE)	511
CFN1500	COATING THICKNESS GAUGE	510
CFN1500B	COATING THICKNESS GAUGE	512
CFN3500B	COATING THICKNESS GAUGE	513
CFN5000B	COATING THICKNESS GAUGE	513
CM100	COLOR METER	541
CM200	COLOR METER	541
CM300	SPECTROPHOTO METER	542
CM3010	SPECTROPHOTO METER	543
CMM-H564A	COORDINATE MEASURING MACHINES	507-509
CMM-H686A	COORDINATE MEASURING MACHINES	507-509
CMM-H686B	COORDINATE MEASURING MACHINES	507-509
CMM-H8106A	COORDINATE MEASURING MACHINES	507-509
CMM-H8106B	COORDINATE MEASURING MACHINES	507-509
CMM-H8126A	COORDINATE MEASURING MACHINES	507-509
CMM-H8126B	COORDINATE MEASURING MACHINES	507-509
CMM-H8156A	COORDINATE MEASURING MACHINES	507-509
CMM-H8156B	COORDINATE MEASURING MACHINES	507-509
CMM-S564A	COORDINATE MEASURING MACHINES	507-509
CMM-S564B	COORDINATE MEASURING MACHINES	507-509
CMM-S686A	COORDINATE MEASURING MACHINES	507-509
CMM-S686B	COORDINATE MEASURING MACHINES	507-509
CMM-S686C	COORDINATE MEASURING MACHINES	507-509
CMM-S8106A	COORDINATE MEASURING MACHINES	507-509
CMM-S8106B	COORDINATE MEASURING MACHINES	507-509
CMM-S8106C	COORDINATE MEASURING MACHINES	507-509
CMM-S8126A	COORDINATE MEASURING MACHINES	507-509
CMM-S8126B	COORDINATE MEASURING MACHINES	507-509
CMM-S8126C	COORDINATE MEASURING MACHINES	507-509
CMM-S8156A	COORDINATE MEASURING MACHINES	507-509
CMM-S8156B	COORDINATE MEASURING MACHINES	507-509
CMM-S8156C	COORDINATE MEASURING MACHINES	507-509
CN1000S	COATING THICKNESS GAUGE (BASIC TYPE)	511
CN1250	COATING THICKNESS GAUGE	512
CN1500	COATING THICKNESS GAUGE	510
CR300	ROUNDNESS/CLINDRICITY TESTER	506
CT900	CONTACT TYPE TACHOMETER	528
CTM450	CUTTING TOOLS MICROSCOPE	436
CUTM600	LOW SPEED PRECISION CUTTING MACHINE	569
D		
DCM600	DIGITAL AC/DC CLAMP METER	526
DF10	DIGITAL FORCE GAUGE	547
DF100	DIGITAL FORCE GAUGE	547
DF1000	DIGITAL FORCE GAUGE	547
DF1000E	DIGITAL FORCE GAUGE	549
DF100E	DIGITAL FORCE GAUGE	549
DF100S	DIGITAL FORCE GAUGE	546
DF10E	DIGITAL FORCE GAUGE	549
DF10K	DIGITAL FORCE GAUGE	548
DF10S	DIGITAL FORCE GAUGE	546
DF20	DIGITAL FORCE GAUGE	547
DF200	DIGITAL FORCE GAUGE	547
DF200S	DIGITAL FORCE GAUGE	546
DF20K	DIGITAL FORCE GAUGE	548
DF20S	DIGITAL FORCE GAUGE	546
DF2K	DIGITAL FORCE GAUGE	548
DF50	DIGITAL FORCE GAUGE	547
DF500	DIGITAL FORCE GAUGE	547
DF500E	DIGITAL FORCE GAUGE	549
DF500S	DIGITAL FORCE GAUGE	546
DF50E	DIGITAL FORCE GAUGE	549
DF50S	DIGITAL FORCE GAUGE	546
DF5K	DIGITAL FORCE GAUGE	548
DF-CG1	CLAMPS FOR FORCE GAUGE	551

CODE	NAME	PAGE
DF-CG2	CLAMPS FOR FORCE GAUGE	551
DF-FC1	CLAMPS FOR FORCE GAUGE	551
DF-FC2	CLAMPS FOR FORCE GAUGE	551
DFS500	MOTORIZED VERTICAL TEST STAND	552
DFS500H	MOTORIZED HORIZONTAL TEST STAND	552
DF-TA	CLAMPS FOR FORCE GAUGE	551
DF-TWG1	CLAMPS FOR FORCE GAUGE	551
DF-WG1	CLAMPS FOR FORCE GAUGE	551
DF-WT1	CLAMPS FOR FORCE GAUGE	551
DHB937-1	DIGITAL BARCOL HARDNESS TESTER	489
DHB937-2	DIGITAL BARCOL HARDNESS TESTER	489
DM200	DIGITAL MICROSCOPE	428
DMN32	DIGITAL MAGNIFIER	427
DMT600	DIGITAL MULTIMETER	526
DO210E	PORTABLE DISSOLVED OXYGEN METER	537
DRM50	DIGITAL PORTABLE REFRACTOMETER	544
DS40K	DIGITAI TACHOMETER/STROBPSCOPE	529
DST10	DIGITAL SPRING TESTER	553
DST100	DIGITAL SPRING TESTER	553
DST20	DIGITAL SPRING TESTER	553
DST200	DIGITAL SPRING TESTER	553
DST30	DIGITAL SPRING TESTER	553
DST300	DIGITAL SPRING TESTER	553
DST50	DIGITAL SPRING TESTER	553
DST500	DIGITAL SPRING TESTER	553
DT135	DIGITAL TORQUE INDICATOR	559
DT200	DIGITAL TORQUE INDICATOR	559
DT30	DIGITAL TORQUE INDICATOR	559
DTG01	DIAL TENSION GAUGE	546
DTG03	DIAL TENSION GAUGE	546
DTG05	DIAL TENSION GAUGE	546
DTG1	DIAL TENSION GAUGE	546
DTG100G	DIAL TENSION GAUGE	546
DTG105	DIAL TENSION GAUGE	546
DTG10G	DIAL TENSION GAUGE	546
DTG150G	DIAL TENSION GAUGE	546
DTG3	DIAL TENSION GAUGE	546
DTG300G	DIAL TENSION GAUGE	546
DTG30G	DIAL TENSION GAUGE	546
DTG5	DIAL TENSION GAUGE	546
DTG500G	DIAL TENSION GAUGE	546
DTG50G	DIAL TENSION GAUGE	546
DVM100	VIDEO MICROSCOPE	434
DVM1000	VIDEO MICROSCOPE	431
DVM2000	HD VIDEO MICROSCOPE	432
DVM2000B	HD VIDEO MICROSCOPE	432
DVM3000	VIDEO MICROSCOPE	433
DVM3D	3D MOTORIZED ROTATION MICROSCOPE	430
DVM3DMS	3D MANUAL ROTATION MICROSCOPE	429
DVM3DS	3D MOTORIZED ROTATION MICROSCOPE	430
DVM4000	AUTO FOCUS VIDEO MICROSCOPE	435
DVM4000S	AUTO FOCUS VIDEO MICROSCOPE	435
E		
EC20	PEN-TYPE CONDUCTIVITY METER	536
EC210E	PORTABLE CONDUCTIVITYITDS METER	535
ES2320	ENDOSCOPE FOR PIPE	423
ES4015	ENDOSCOPE	418
ES5515	ENDOSCOPE	418
ES5530	ENDOSCOPE	418
ESE40	ENDOSCOPE	419
ESE60	ENDOSCOPE	419
ESE80	ENDOSCOPE	419
ESF0410	MANUAL 360° SWIVEL ENDOSCOPE	422
ESF0410S	MANUAL 360° SWIVEL ENDOSCOPE	422
ESF0415	MANUAL 360° SWIVEL ENDOSCOPE	422
ESF0415S	MANUAL 360° SWIVEL ENDOSCOPE	422
ESF0420	MANUAL 360° SWIVEL ENDOSCOPE	422
ESF0420S	MANUAL 360° SWIVEL ENDOSCOPE	422
ESF0430	MANUAL 360° SWIVEL ENDOSCOPE	422
ESF0430S	MANUAL 360° SWIVEL ENDOSCOPE	422
ESF0440	MANUAL 360° SWIVEL ENDOSCOPE	422
ESF0450	MANUAL 360° SWIVEL ENDOSCOPE	422
ESF0610	MANUAL 360° SWIVEL ENDOSCOPE	422
ESF0610S	MANUAL 360° SWIVEL ENDOSCOPE	422
ESF0615	MANUAL 360° SWIVEL ENDOSCOPE	422
ESF0615S	MANUAL 360° SWIVEL ENDOSCOPE	422
ESF0620	MANUAL 360° SWIVEL ENDOSCOPE	422
ESF0620S	MANUAL 360° SWIVEL ENDOSCOPE	422
ESF0630	MANUAL 360° SWIVEL ENDOSCOPE	422
ESF0630S	MANUAL 360° SWIVEL ENDOSCOPE	422
ESF0640	MANUAL 360° SWIVEL ENDOSCOPE	422
ESF0640S	MANUAL 360° SWIVEL ENDOSCOPE	422
ESF0650	MANUAL 360° SWIVEL ENDOSCOPE	422
ESF0650S	MANUAL 360° SWIVEL ENDOSCOPE	422

CODE INDEX

CODE	NAME	PAGE
ESF0660	MANUAL 360° SWIVEL ENDOSCOPE	422
ESF0670	MANUAL 360° SWIVEL ENDOSCOPE	422
ESP40	ENDOSCOPE	420
ESS0410	MANUAL 360° SWIVEL ENDOSCOPE	421
ESS0415	MANUAL 360° SWIVEL ENDOSCOPE	421
ESS0420	MANUAL 360° SWIVEL ENDOSCOPE	421
ESS0430	MANUAL 360° SWIVEL ENDOSCOPE	421
ESS0440	MANUAL 360° SWIVEL ENDOSCOPE	421
ESS0450	MANUAL 360° SWIVEL ENDOSCOPE	421
ESS0610	MANUAL 360° SWIVEL ENDOSCOPE	421
ESS0615	MANUAL 360° SWIVEL ENDOSCOPE	421
ESS0620	MANUAL 360° SWIVEL ENDOSCOPE	421
ESS0630	MANUAL 360° SWIVEL ENDOSCOPE	421
ESS0640	MANUAL 360° SWIVEL ENDOSCOPE	421
ESS0650	MANUAL 360° SWIVEL ENDOSCOPE	421
ESS0660	MANUAL 360° SWIVEL ENDOSCOPE	421
ESS0670	MANUAL 360° SWIVEL ENDOSCOPE	421
EST0810	WIFI ENDOSCOPE	424
F		
FS1000	TEST STAND FOR FORCE GAUGE	551
FS1000S	TEST STAND FOR FORCE GAUGE	551
G		
GM268	20°/60°/85° GLOSS METER	539
GM268S	20°/60°/85°GLOSS METER	540
GM60	60° GLOSS METER	540
GP203	MANUAL GRINDING POLISHING MACHINE	569
GY-2	FRUIT HARDNESS TESTER	483
H		
HB3000	DIGITAL BRINELL HARDNESS TESTER	470
HB937-1	BARCOL HARDNESS TESTER	489
HB-MS	BRINELL MEASURING SYSTEM	472
HB-P1	HAMMER IMPACT HARDNESS TESTER	471
HG100E	DIGITAL HEIGHT GAGE WITH STAND	79
HG100H	DIGITAL HEIGHT GAGE WITH STAND	79
HG100S	DIGITAL HEIGHT GAGE WITH STAND	79
HG50E	DIGITAL HEIGHT GAGE WITH STAND	79
HG50H	DIGITAL HEIGHT GAGE WITH STAND	79
HG50S	DIGITAL HEIGHT GAGE WITH STAND	79
HL100	PORTABLE HARDNESS TESTER	480
HL200	PORTABLE HARDNESS TESTER	481
HL350	PORTABLE HARDNESS TESTER	482
HL400	PORTABLE HARDNESS TESTER	482
HL450	PORTABLE HARDNESS TESTER	483
HL450W	PORTABLE HARDNESS TESTER	483
HM1000	HAZE METER	544
HR150	MANUAL ROCKWELL HARDNESS TESTER	462
HR150A	DIGITAL ROCKWELL HARDNESS TESTER	464
HR150B	MANUAL ROCKWELL HARDNESS TESTER	463
HR150C	DIGITAL ROCKWELL HARDNESS TESTER	465
HR150CNC	ROCKWELL HARDNESS TESTER	467
HR150D	ROCKWELL HARDNESS TESTER	466
HRSS150A	DIGITAL ROCKWELL HARDNESS TESTER	468
HRSS150C	DIGITAL ROCKWELL HARDNESS TESTER	469
HS1A	DIGITAL SHORE HARDNESS TESTER	485
HS-1A-STD	STAND FOR SHORE HARDNESS TESTER	487
HS5D	DIGITAL SHORE HARDNESS TESTER	485
HS-5D-STD	STAND FOR SHORE HARDNESS TESTER	487
HSC	AUTOMATIC SHORE HARDNESS TESTER	484
HSM1A	SHORE HARDNESS TESTER	486
HSM-1A-ST	STAND FOR SHORE HARDNESS TESTER	487
HSM5D	SHORE HARDNESS TESTER	486
HSM-5D-ST	STAND FOR SHORE HARDNESS TESTER	487
HSOO	DIGITAL SHORE HARDNESS TESTER	485
HS-OO-STD	STAND FOR SHORE HARDNESS TESTER	487
HTC-1	TEMPERATURE METER	522
HTC-300	TEMPERATURE METER FOR FOOD	524
HTC-70	TEMPERATURE METER	522
HTC-COS03	TEMPERATURE AND HUMIDITY METER	523
HVS1000	MICRO-VICKERS HARDNESS TESTER	473
HVS1000M	MICRO-VICKERS HARDNESS TESTER	474
HVS1000MCNC	MICRO-VICKERS HARDNESS TESTER	476
HVS1000MS	MICRO-VICKERS HARDNESS TESTER	476
HVS1000S	MICRO-VICKERS HARDNESS TESTER	475
HVS10M	VICKERS HARDNESS TESTER	477
HVS50M	VICKERS HARDNESS TESTER	477
HW-B75	WEBSTER HARDNESS TESTER	490
HW-B92	WEBSTER HARDNESS TESTER	490
HW-C75	WEBSTER HARDNESS TESTER	490
HW-L20	WEBSTER HARDNESS TESTER	490
HW-L20A	WEBSTER HARDNESS TESTER	490
HW-L20B	WEBSTER HARDNESS TESTER	490
I		
IT1650S	INFRARED THERMOMETER	524
IT700	INFRARED THERMOMETER	524

CODE	NAME	PAGE
ITC450	INFRARED THERMAL IMAGING CAMERA	525
L		
LL025	LASER LEVEL	532
LL030	LASER LEVEL	531
LL325	LASER LEVEL	532
LL525	LASER LEVEL	532
LM100	LIGHT METER	531
LSA1	LINEAR SCALE	457
LSB5	LINEAR SCALE	457
LSM25	LASER SCAN MICROMETER	539
LSM50	LASER SCAN MICROMETER	539
LT900	LASER TACHOMETER	528
M		
MG10	FOLDING MAGNIFIER	425
MG305	MAGNIFICATION GLASSES	424
MG30X	MEASURING MAGNIFIER	425
MM1000A	METALLURGICAL MICROSCOPE	439
MST2000	EMAT THICKNESS GAUGE	517
MTM200	TOOLMAKER VISION MACHINE	449
MTM300	TOOLMAKER VISION MACHINE	449
MTM400	TOOLMAKER VISION MACHINE	449
MTT3600	X-RAY FLUORESCENCE SPECTROMETER	521
N		
NK-100	FORCE GAUGE	550
NK-20	FORCE GAUGE	550
NK-200	FORCE GAUGE	550
NK-30	FORCE GAUGE	550
NK-300	FORCE GAUGE	550
NK-50	FORCE GAUGE	550
NK-500	FORCE GAUGE	550
O		
OP4000-BT30-PB	INFRARED TRANSMISSION PROBE	408
OP4000-BT40-PB	INFRARED TRANSMISSION PROBE	408
OP4000-BT50-PB	INFRARED TRANSMISSION PROBE	408
OSI-30	INFRARED TRANSMISSION RECEIVER	409
P		
PH12	PEN-TYPE PH METER	533
PH210E	PORTABLE PH METER	534
PHT1000	PENCIL HARDNESS TESTER	491
PM100	PORTABLE MEASURING MICROSCOPE	429
PP3015	PROFILE PROJECTOR	440-441
PP3020	PROFILE PROJECTOR	440-441
PP3020W	HORIZONTAL PROFILE PROJECTOR	442-443
PP4025W	HORIZONTAL PROFILE PROJECTOR	444-445
PP6020	PROFILE PROJECTOR	446-447
PS075	PORTABLE SCALE	565
Q		
QVM1010	QUICK MEASUREMENT VISION MACHINE	448
QVM2020	QUICK MEASUREMENT VISION MACHINE	448
QVM3020	QUICK MEASUREMENT VISION MACHINE	448
R		
RBV150C	HARDNESS TESTER	478
RBV150D	HARDNESS TESTER	479
RC30	SURFACE ROUGHNESS SPECIMEN	498
RM10	PORTABLE REFRACTOMETER	545
RM20	PORTABLE REFRACTOMETER	545
RM32	PORTABLE REFRACTOMETER	545
RM50S	AUTOMOTIVE REFRACTOMETER	545
RN1000	ROUNDNESS TESTER	505
RP100JS	PROFILE AND ROUGHNESS MACHINE	493-494
RP100RS	PROFILE AND ROUGHNESS MACHINE	493-494
RP100TS	PROFILE AND ROUGHNESS MACHINE	493-494
RP150RS	PROFILE AND ROUGHNESS MACHINE	495-496
RP-B3001	STYLUS FOR CONTOUR MACHINE	497
RP-D1001	STYLUS FOR CONTOUR MACHINE	497
RP-D1002	STYLUS FOR CONTOUR MACHINE	497
RP-D1003	STYLUS FOR CONTOUR MACHINE	497
RP-D1004	STYLUS FOR CONTOUR MACHINE	497
RP-D1005	STYLUS FOR CONTOUR MACHINE	497
RP-D2001	STYLUS FOR CONTOUR MACHINE	497
RP-D3001	STYLUS FOR CONTOUR MACHINE	497
RP-D3002	STYLUS FOR CONTOUR MACHINE	497
RP-D3003	STYLUS FOR CONTOUR MACHINE	497
RP-D3004	STYLUS FOR CONTOUR MACHINE	497
RP-DC2001	STYLUS FOR CONTOUR MACHINE	497
RP-N1001	STYLUS FOR CONTOUR MACHINE	497
RP-N1002	STYLUS FOR CONTOUR MACHINE	497
RP-N1003	STYLUS FOR CONTOUR MACHINE	497
RP-N1004	STYLUS FOR CONTOUR MACHINE	497
RP-N1005	STYLUS FOR CONTOUR MACHINE	497
RP-N2001	STYLUS FOR CONTOUR MACHINE	497
RP-N2002	STYLUS FOR CONTOUR MACHINE	497
RP-N3001	STYLUS FOR CONTOUR MACHINE	497
RP-N3002	STYLUS FOR CONTOUR MACHINE	497

CODE INDEX

CODE	NAME	PAGE
RP-N810151	MEASURING ROD FOR CONTOUR MACHINE	498
RP-N810152	MEASURING ROD FOR CONTOUR MACHINE	498
RP-N815151	MEASURING ROD FOR CONTOUR MACHINE	498
RP-N815152	MEASURING ROD FOR CONTOUR MACHINE	498
RP-N820151	MEASURING ROD FOR CONTOUR MACHINE	498
RP-N820152	MEASURING ROD FOR CONTOUR MACHINE	498
RP-R8131	MEASURING ROD FOR CONTOUR MACHINE	498
RP-R8132	MEASURING ROD FOR CONTOUR MACHINE	498
RP-R8151	MEASURING ROD FOR CONTOUR MACHINE	498
RP-R8152	MEASURING ROD FOR CONTOUR MACHINE	498
RP-R8181	MEASURING ROD FOR CONTOUR MACHINE	498
RP-R8182	MEASURING ROD FOR CONTOUR MACHINE	498
RP-S8101	MEASURING ROD FOR CONTOUR MACHINE	498
RP-S8102	MEASURING ROD FOR CONTOUR MACHINE	498
RP-S8151	MEASURING ROD FOR CONTOUR MACHINE	498
RP-S8152	MEASURING ROD FOR CONTOUR MACHINE	498
RP-S8201	MEASURING ROD FOR CONTOUR MACHINE	498
RP-S8202	MEASURING ROD FOR CONTOUR MACHINE	498
RP-SP1001	STYLUS FOR CONTOUR MACHINE	497
RP-SP1002	STYLUS FOR CONTOUR MACHINE	497
RP-SP1003	STYLUS FOR CONTOUR MACHINE	497
RP-SP1004	STYLUS FOR CONTOUR MACHINE	497
RP-SP2001	STYLUS FOR CONTOUR MACHINE	497
RP-SP2002	STYLUS FOR CONTOUR MACHINE	497
RP-SP2003	STYLUS FOR CONTOUR MACHINE	497
RP-SP3001	STYLUS FOR CONTOUR MACHINE	497
RP-SP3002	STYLUS FOR CONTOUR MACHINE	497
RP-SP3003	STYLUS FOR CONTOUR MACHINE	497
RP-SP3004	STYLUS FOR CONTOUR MACHINE	497
RP-SP3005	STYLUS FOR CONTOUR MACHINE	497
RP-SP3006	STYLUS FOR CONTOUR MACHINE	497
RP-SP3007	STYLUS FOR CONTOUR MACHINE	497
RP-SP3008	STYLUS FOR CONTOUR MACHINE	497
RP-SP3010	STYLUS FOR CONTOUR MACHINE	497
S		
SCAN3D54	HANDHELD 3D SCANNER	459
SCAN3DPRO	HANDHELD 3D SCANNER	459
SLM130	DIGITAL SOUND LEVEL METER	532
SR100	MINI ROUGHNESS TESTER	499
SR110	ROUGHNESS TESTER	503
SR200	ROUGHNESS TESTER	500
SR300	ROUGHNESS TESTER	501
SR400	ROUGHNESS TESTER	502
ST100A	ULTRASONIC THICKNESS GAUGE	514
ST200	ULTRASONIC THICKNESS GAUGE	515
ST300	ULTRASONIC THICKNESS GAUGE	516
STB-4A	STANDARD THICKNESS TEST BLOCK	518
STB-4B	STANDARD THICKNESS TEST BLOCK	518
STB-5A	STANDARD THICKNESS TEST BLOCK	518
STB-5B	STANDARD THICKNESS TEST BLOCK	518
STB-7A	STANDARD THICKNESS TEST BLOCK	518
STB-7B	STANDARD THICKNESS TEST BLOCK	518
STE70	DIGITAL REBOUND TESTER	490
STWM110	TORQUE WRENCH WITH BIT SET	556
STWM210	TORQUE WRENCH WITH BIT SET	556
STWM25	TORQUE WRENCH WITH BIT SET	556
T		
TM100B	LASER DISTANCE METER	518
TM100R	LASER DISTANCE METER	519
TM1200	LASER DISTANCE METER	519
TM40	LASER DISTANCE METER	518
TM50R	LASER DISTANCE METER	519
TM60T	LASER DISTANCE METER WITH TAPE	520
TP450	TOOL PRESETTER	460-461
TQ200CN	DIGITAL TORQUE SCREWDRIVER	558
TQ400CN	DIGITAL TORQUE SCREWDRIVER	558
TQ50CN	DIGITAL TORQUE SCREWDRIVER	558
TQM120	TORQUE SCREWDRIVER	560
TQM300	TORQUE SCREWDRIVER	560
TQM60	TORQUE SCREWDRIVER	560
TQM600	TORQUE SCREWDRIVER	560
TT05	DIGITAL TORQUE METER	565
TT1000	DIGITAL TORQUE METER	565
TT220	DIGITAL TORQUE METER	565
TT2200	DIGITAL TORQUE METER	565
TT550	DIGITAL TORQUE METER	565
TTB10	DIGITAL TORQUE METER	562
TTB100	DIGITAL TORQUE METER	562
TTB1000	DIGITAL TORQUE METER	562
TTB5	DIGITAL TORQUE METER	562
TTB50	DIGITAL TORQUE METER	562
TTB500	DIGITAL TORQUE METER	562
TTB-ST1	STAND FOR TORQUE WRENCH TESTING	563
TTB-ST2	STAND FOR TORQUE WRENCH TESTING	563

CODE	NAME	PAGE
TTB-ST4	STAND FOR TORQUE WRENCH TESTING	563
TTM10	DIGITAL BOTTLE CAP TORQUE METER	560
TTM2	DIGITAL BOTTLE CAP TORQUE METER	560
TTM20	DIGITAL BOTTLE CAP TORQUE METER	560
TTM5	DIGITAL BOTTLE CAP TORQUE METER	560
TTR01	DIGITAL TORQUE METER	561
TTR02	DIGITAL TORQUE METER	561
TTR03	DIGITAL TORQUE METER	561
TTR05	DIGITAL TORQUE METER	561
TTR10	DIGITAL TORQUE METER	561
TTR20	DIGITAL TORQUE METER	561
TTS1	DIGITAL TORQUE METER	563
TTS10	DIGITAL TORQUE METER	563
TTS5	DIGITAL TORQUE METER	563
TVM200	CUTTING TOOLS VISION MACHINE	450
TW12	DIGITAL TORQUE WRENCH	556
TW135	DIGITAL TORQUE WRENCH	556
TW1500	DIGITAL TORQUE WRENCH	556
TW20	DIGITAL TORQUE WRENCH	556
TW200	DIGITAL TORQUE WRENCH	556
TW2000	DIGITAL TORQUE WRENCH	556
TW30	DIGITAL TORQUE WRENCH	556
TW340	DIGITAL TORQUE WRENCH	556
TW550	DIGITAL TORQUE WRENCH	556
TW850	DIGITAL TORQUE WRENCH	556
TWD140	DIAL TORQUE WRENCH	557
TWD18	DIAL TORQUE WRENCH	557
TWD240	DIAL TORQUE WRENCH	557
TWD3	DIAL TORQUE WRENCH	557
TWD35	DIAL TORQUE WRENCH	557
TWD350	DIAL TORQUE WRENCH	557
TWD70	DIAL TORQUE WRENCH	557
TWD9	DIAL TORQUE WRENCH	557
TWF100	TORQUE WRENCH	557
TWF150	TORQUE WRENCH	557
TWF250	TORQUE WRENCH	557
TWF600	TORQUE WRENCH	557
TWI200	TORQUE WRENCH	557
TWI250	TORQUE WRENCH	557
TWM100	TORQUE WRENCH	555
TWM1000B	TORQUE WRENCH	555
TWM110B	TORQUE WRENCH	555
TWM110C	TORQUE WRENCH	555
TWM1500B	TORQUE WRENCH	555
TWM200	TORQUE WRENCH	555
TWM2000B	TORQUE WRENCH	555
TWM210B	TORQUE WRENCH	555
TWM25	TORQUE WRENCH	555
TWM25B	TORQUE WRENCH	555
TWM3000B	TORQUE WRENCH	555
TWM330B	TORQUE WRENCH	555
TWM340	TORQUE WRENCH	555
TWM50	TORQUE WRENCH	555
TWM550B	TORQUE WRENCH	555
TWM60B	TORQUE WRENCH	555
TWM60D	TORQUE WRENCH	555
TWM800B	TORQUE WRENCH	555
TWQ-1000	TORQUE MULTIPLIERS	559
TWQ-10000	TORQUE MULTIPLIERS	559
TWQ-2000	TORQUE MULTIPLIERS	559
TWQ-3500	TORQUE MULTIPLIERS	559
TWQ-5500	TORQUE MULTIPLIERS	559
TWQ-7500	TORQUE MULTIPLIERS	559
TWS1000	WINDOWS TORQUE WRENCH	558
TWS100B	WINDOWS TORQUE WRENCH	558
TWS12	WINDOWS TORQUE WRENCH	558
TWS1500	WINDOWS TORQUE WRENCH	558
TWS20	WINDOWS TORQUE WRENCH	558
TWS200	WINDOWS TORQUE WRENCH	558
TWS2000	WINDOWS TORQUE WRENCH	558
TWS20B	WINDOWS TORQUE WRENCH	558
TWS30	WINDOWS TORQUE WRENCH	558
TWS3000	WINDOWS TORQUE WRENCH	558
TWS330	WINDOWS TORQUE WRENCH	558
TWS400	WINDOWS TORQUE WRENCH	558
TWS400B	WINDOWS TORQUE WRENCH	558
TWS550	WINDOWS TORQUE WRENCH	558
TWS60	WINDOWS TORQUE WRENCH	558
TWS60B	WINDOWS TORQUE WRENCH	558
TWT1000M	MOTORIZED TORQUE WRENCH TESTER	564
TWT200	TORQUE WRENCH TSETER	564
TWT200M	MOTORIZED TORQUE WRENCH TESTER	564
TWT500	TORQUE WRENCH TSETER	564
TWT500M	MOTORIZED TORQUE WRENCH TESTER	564

CODE INDEX

CODE	NAME	PAGE
U		
UHT200	ULTRASONIC HARDNESS TESTER	**488**
UTT100	UNIVERSAL TENSILE TESTING MACHINE	**554**
UTT1000	UNIVERSAL TENSILE TESTING MACHINE	**554**
UTT10000	UNIVERSAL TENSILE TESTING MACHINE	**554**
UTT200	UNIVERSAL TENSILE TESTING MACHINE	**554**
UTT2000	UNIVERSAL TENSILE TESTING MACHINE	**554**
UTT20000	UNIVERSAL TENSILE TESTING MACHINE	**554**
UTT50	UNIVERSAL TENSILE TESTING MACHINE	**554**
UTT500	UNIVERSAL TENSILE TESTING MACHINE	**554**
UTT5000	UNIVERSAL TENSILE TESTING MACHINE	**554**
V		
VM1000CNC	AUTOMATIC VISION MACHINE	**455-456**
VM1200CNC	AUTOMATIC VISION MACHINE	**455-456**
VM1500CNC	AUTOMATIC VISION MACHINE	**455-456**
VM2010	VISION MACHINE	**451-452**
VM2010M	VISION MACHINE	**451-452**
VM300CNC	AUTOMATIC VISION MACHINE	**453-454**
VM3020	VISION MACHINE	**451-452**
VM3020M	VISION MACHINE	**451-452**
VM400CNC	AUTOMATIC VISION MACHINE	**453-454**
VM4030	VISION MACHINE	**451-452**
VM4030M	VISION MACHINE	**451-452**
VM500CNC	AUTOMATIC VISION MACHINE	**453-454**
VM5040	VISION MACHINE	**451-452**
VM5040M	VISION MACHINE	**451-452**
VM600CNC	AUTOMATIC VISION MACHINE	**455-456**
VM800CNC	AUTOMATIC VISION MACHINE	**455-456**
VT63	PEN TYPE VIBRATION TESTER	**530**
VT63B	PEN TYPE VIBRATION TESTER	**530**
VT63C	VIBRATION TESTER	**529**
W		
WE6800-2	DIGITAL READOUT	**456**
WE6800-3	DIGITAL READOUT	**456**
WIFI200	DIGITAL WIFI MICROSCOPE	**428**
WMM700	WOOD MOISTURE METER	**527**
WMM900	CONCRETE MOISTURE METER	**527**
WS03K	ELECTRONIC WEIGHING SCALE	**567**
WS06K	ELECTRONIC WEIGHING SCALE	**567**
WS15K	ELECTRONIC WEIGHING SCALE	**567**
WS30K	ELECTRONIC WEIGHING SCALE	**567**
WSC3000G	WEIGHING SCALE FOR KITCHEN	**566**
WSH1000G	ELECTRONIC BALANCE	**566**
WSH2000G	ELECTRONIC BALANCE	**566**
WSH200G	ELECTRONIC BALANCE	**566**
WSH3000G	ELECTRONIC BALANCE	**566**
WSH5000G	ELECTRONIC BALANCE	**566**
WSH500G	ELECTRONIC BALANCE	**566**
WSH6000G	ELECTRONIC BALANCE	**566**
WSJ1000G	HIGH PRECISION ELECTRONIC BALANCE	**567**
WSJ100G	HIGH PRECISION ELECTRONIC BALANCE	**567**
WSJ2000G	HIGH PRECISION ELECTRONIC BALANCE	**567**
WSJ200G	HIGH PRECISION ELECTRONIC BALANCE	**567**
WSJ300G	HIGH PRECISION ELECTRONIC BALANCE	**567**
WSJ600G	HIGH PRECISION ELECTRONIC BALANCE	**567**
WT	WEIGHT	**568**
WTS	WEIGHT SET	**568**
Z		
ZS0850	ZOOM STEREO MICROSCOPE	**438**
ZS0850T	ZOOM STEREO MICROSCOPE	**438**
ZS1045	ZOOM STEREO MICROSCOPE	**437**
ZS1045T	ZOOM STEREO MICROSCOPE	**437**

ACCUD has dealers in more than 70 countries and area now, and continues to look for more dealers to establish network in all of the word, If you have interest, please contact us.



ACCUD is the registered trademark of ACCUD CO., LTD.

ACCUD CO., LTD. has the right to change or modify the picture and specifications of products without prior notice.

www.accud.com

ACCUD (EUROPE) CO., LTD.
Add: Accud Europe Divišovská 840
Vlašim, 25801 Czech Republic
Tel: 00420 734 599 166
Email: euro@accud.com

ACCUD (CHINA) CO., LTD.
Add: 199 Jinfeng Road, Suzhou
New District, 215011 China
Tel: 0086-512-62631289
Fax: 0086-512-68232313
Email: sales@accud.com